THIS DRAWING IS UNPUBLISHED. RELEASED FOR PUBLICATION -,- .
© COPYRIGHT - By - ALL RIGHTS RESERVED.

LOC	DIST
G	14

REVISIONS

P	LTR	DESCRIPTION	DATE	DWN	APVD
	T	REVISED PER ECO-14-015277	10FEB2015	NK	DR

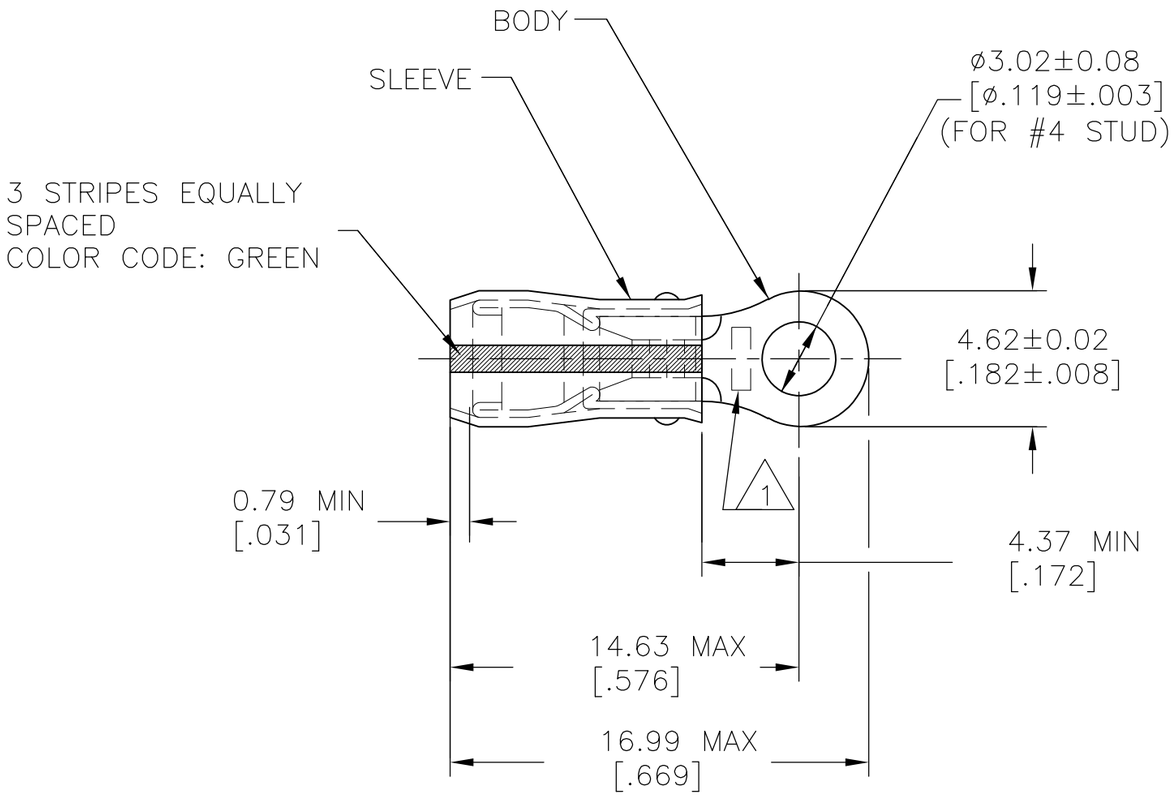

1 STAMP AMP APPROX AS SHOWN.

2 WIRE INSULATION DIA, 2.03-3.18[.080-.125]

3 TONGUE MATERIAL THK, 0.79±0.05[.031±.002]

1000	LOOSE PIECE	327654
QUANTITY	PACKAGE TYPE	PART NO

AMP INCORPORATED
CUSTOMER SERVICE SYSTEMS

FOR ADDITIONAL PRODUCT INFORMATION OR COPIES OF DRAWINGS AND TECHNICAL DOCUMENTS	PRODUCT INFORMATION CENTER 1-800-522-6752
FOR APPLICATION TOOLING INFORMATION	TOOLING ASSISTANCE CENTER 1-800-722-1111
FOR ORDER ENTRY	1-800-526-5142

THIS DRAWING IS A CONTROLLED DOCUMENT FOR AMP INCORPORATED. IT IS SUBJECT TO CHANGE AND THE CONTROLLING ENGINEERING ORGANIZATION SHOULD BE CONTACTED FOR THE LATEST REVISION.

MAX RECOMMENDED OPERATING TEMPERATURE: 105°C [221°F] MAX

VOLTAGE RATING: 300 V MAX

WIRE: 0.26-1.65mm² [509-3260] CIR MILS SOLID OR STRANDED

THIS DRAWING IS A CONTROLLED DOCUMENT.

DIMENSIONS: mm [INCHES]

TOLERANCES UNLESS OTHERWISE SPECIFIED:

0 PLC	± -
1 PLC	± -
2 PLC	± 0.20[.008]
3 PLC	± -
4 PLC	± -
ANGLES	± -

MATERIAL: COPPER PER ASTM B-152 SLEEVE, RED NYLON

FINISH: TIN PLATE PER ASTM B545

DWN	DK SCHRUM	9/30/93
CHK	RE HERSEY	9/30/93
APVD	ML ELLIS	9/30/93
PRODUCT SPEC	UL 486A	
APPLICATION SPEC	NOT AVAILABLE	
WEIGHT	-	

TE Connectivity

NAME: TERMINAL, RING TONGUE, PIDG™, WIRE SIZE, 22-16 AWG

SIZE	CAGE CODE	DRAWING NO	RESTRICTED TO
A3	00779	C-327654	-

CUSTOMER DRAWING

SCALE	SHEET	REV
NTS	1 OF 1	T

1470-19 (3/11)