KU4000 Series

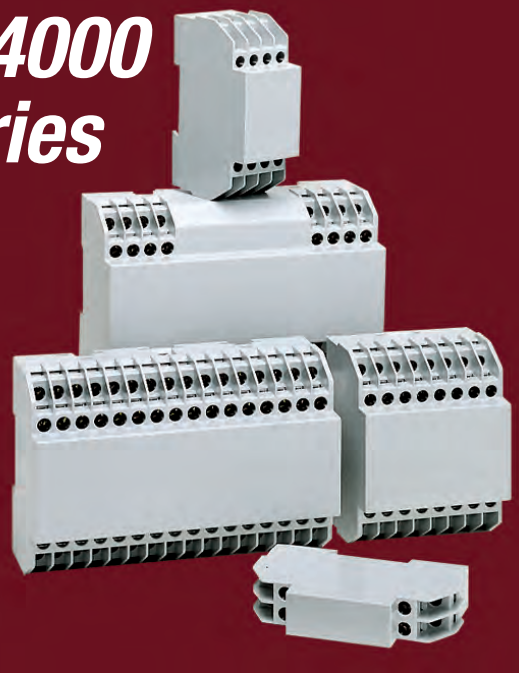

Versatile, compact enclosures are ideal for applications with space constraints and for mounting within large international style enclosures with 45mm (1.77 in.) cutouts, such as Altech's EK and AK series nonmetallic enclosures. Small to medium in size, KU4000 enclosures offer 8 to 64 terminals for field wire connections. Pressure plate or spring cage terminals are standard. The KU4000 series are equipped with double level terminals which provide a maximum number of external connections in a minimal amount of space. Standard enclosures are supplied as kits, containing the base, cover and the maximum number of terminals.

MATERIALS

Housing

Housing Shell: Polycarbonate, 10% Glass Filled
Base: Polycarbonate, 10% Glass Filled

Terminals

Terminal Pins: Tinned Steel
Pressure Plate: Chromated Steel
Terminal Screws: Chromated Steel
Spring Clamps: Stainless Steel

Temperature Rating: 110°C (230°F) UL94VO
Standard Color: Light Gray

PROTECTION

KU4000 enclosures have an IP20 rating (finger protected) and meet VBG4 and other European accident prevention requirements.

CONSTRUCTION

The KU4000 series housings are supplied as unassembled kits. Each kit consists of a flat base, a housing cover and 8, 16, 24, 32, 48 or 64 terminals. Double level terminals keep the enclosure size to a minimum, and yet, due to the innovative housing design, relatively large components can be mounted inside.

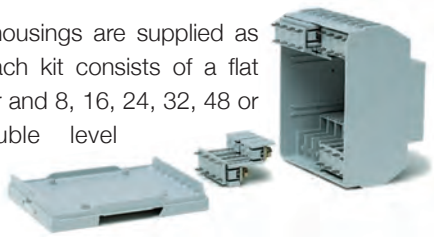

The terminals are machine solderable and have straight or right angle pins, depending on enclosure type (Type C has straight pins, Type B has right angle pins). We can also supply enclosures with fewer than the maximum number of terminals, please contact us with your requirements.

The KU4000 series are available in five widths, and are supplied with terminals in three standard positions:

- Terminals on top and bottom
- Terminals on one side only
- Terminals at both ends, the center area has no terminals.

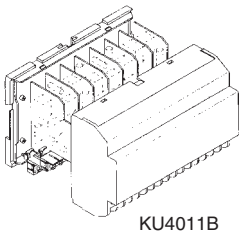

KU4011B

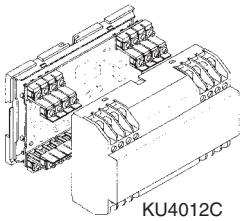

KU4012C

Cover plugs are available as accessories and can be plugged into unused screw holes and wire entries. Plugs are offered as sets, consisting of one screw-hole cover and one wire entry cover ***(Refer to Accessories in the Ordering Pages)***.

Integral printed circuit board guides are molded into the housing cover to save time when inserting boards. They also prevent misconnections and keep the boards from moving.

Printed circuit boards can be mounted in three ways:

- Horizontally, parallel with the base
- Vertically, perpendicular to the base
- Vertically, parallel with the DIN rail

One large board can be mounted against the base of the enclosure (parallel with the base) using terminals with straight solder pins. Boards can also be mounted vertically (perpendicular to the base) by using terminals with right angle solder pins, or vertically (parallel with the DIN rail) by using a wire jumper connection.
(Refer to the Ordering Pages).

EK Series Industrial Enclosure

The face of the cover is 45mm (1.77 in.) high, and can be mounted into standard DIN distribution systems which have 45mm cutouts like Altechs EK and AK series of industrial enclosures. Mount the KU4000 enclosures together with circuit breakers and other DIN rail mount devices which also meet the 45mm standard. Removal of the housing cover is possible for service and repair after disconnecting the wires. KU4000 covers cannot be potted without taking special steps.

TERMINALS

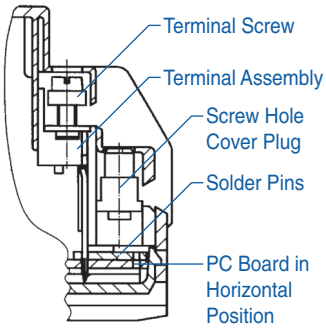

Pressure plate terminals are standard for the KU4000 enclosure and ensure a vibration proof connection. The pressure plate, which is captive to the terminal screw, automatically rises when the screw is loosened. One or two wires of equal or different sizes up to 2.5mm² (14 AWG) can be terminated in each terminal. The grooved corners of the pressure plate ensure positive retention of the wires. The flat bottom of the terminal extends to the inside of the enclosure and provides the terminal-to-board connection. The terminal screws can be turned by a flat tip or a #2 Pozidriv screwdriver.

The KU4000 series is also available with spring cage terminals. The terminal is opened by appling pressure with a screwdriver to open the clamp. Once the wire is inserted, the screwdriver is removed, creating a vibration proof connection to the wire.

TERMINAL-TO-BOARD CONNECTIONS

The KU4000 series offers several fixed terminal-to-board connection possibilities. (Refer to the Ordering Pages for connection types.)

Wire Jumper connections can be made by soldering a wire jumper between the center hole of the right angle solder pins and the printed circuit board(s). Upon soldering, the board is installed into the enclosure complete with terminals and other components.

All KU4000 terminals have ***Machine Solderable Pins***, which can be machine soldered to the board(s) in the same step as the other components, saving assembly time.

MOUNTING

The KU4000 enclosures snap onto standard 35mm DIN rail or can be panel mounted. Mount one or several enclosures together, or mix them with other DIN rail mounted devices such as terminal blocks, circuit breakers, etc. The choice is yours.

MARKING

The KU4000 series have large marking areas on the front of the cover.

ACCESSORIES

- Cover Plugs for Screw Hole and Wire Entries
- Screws for Mounting Printed Circuit Board
- Pull-Out Panel Mounting Tabs
- 35mm DIN Rail

CUSTOMIZATION

We can supply the KU4000, series enclosure kits with the exact number of terminals to meet your requirements. Enclosures can also be customized with cutouts and holes. Custom colors and special markings are also available.

Enclosure Mounting Procedures

DIN Rail Mounting

The top of the enclosure base has notches molded onto the sides. The bottom of the base has one spring-loaded tab that is factory installed into a molded guide for DIN rail mounting.

When mounting, tilt the bottom of the enclosure slightly away from the rail until the notches grab onto the top flange of the DIN rail. Push the bottom of the enclosure forward towards the DIN rail. The spring-loaded tab will snap onto the bottom of the rail and hold the enclosure firmly in place.

To remove the enclosure from the DIN rail, insert a screwdriver into the exposed slot in the tab and pull the tab down. Pull enclosure forward and remove from the rail.

Panel Mounting

To mount enclosures on a panel or any flat surface, at least one tab must be in place on the top and on the bottom of the enclosure base in the panel mount position. Standard enclosures are supplied with one tab on the bottom for DIN rail mounting.

Install one or more additional tabs ***(see Accessories in the Ordering Pages)*** into molded tab guides on the back of the enclosure base. Move the pre-installed bottom tab from the DIN rail position to the panel mount position.

To move the tab, insert a screwdriver under the spring pin, lift it and pull the tab forward until it extends approximately 6mm(.25 in.) from the enclosure. Release pin and lock the tab in the panel mount position.

We can supply the enclosures already set up for panel mounting if desired. ***(Please specify when ordering)***.

8 Terminal

Vertical PCB
Screw Clamp

TECHNICAL INFORMATION

Electrical:
16A, 300V, 22-14 AWG
Housing Material:
Glass-filled Polycarbonate
Temperature Range:
Up to 125°C (257°F)
Flammability Rating:
UL94 V-O
Color:
Light Gray

Terminal Type:
Screw / Pressure Plate
Terminal Screw Size:
M3.5
Recommended Torque:
0.8Nm
Max. PCB's:
(1) Vertical
Mounting:
35mm DIN Rail or optional panel mounting*

ORDERING INFORMATION

Part Number	Type	Description	PCB Connection
91.201	KU4001B	Right Angle Pins	Machine Solder/ Wire Jumper

ACCESSORIES

Accessories	Part Number	Type
1 Meter DIN Rail	2511120/1M	TS35x7.5/1M
Screw-hole and Wire-Entry Cover Plug Set	91.201.1	SHPC
*Panel Mount Tab	93.001.5	PMA/KU

ENCLOSURE DRAWING (To convert to inches divide by 25.4.)

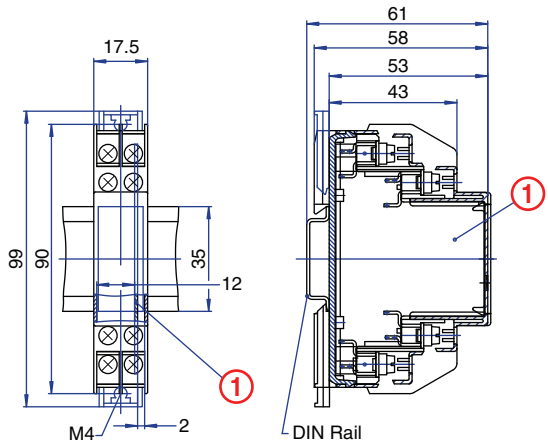

PCB DRAWING (To convert to inches divide by 25.4.)

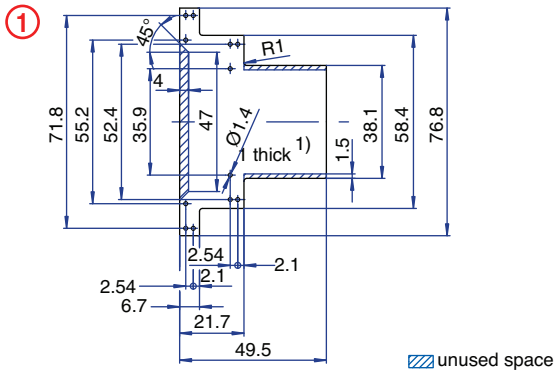

8 Terminal

Horizontal PCB
Screw Clamp

TECHNICAL INFORMATION

Electrical:
16A, 300V, 22-14 AWG
Housing Material:
Glass-filled Polycarbonate
Temperature Range:
Up to 125°C (257°F)
Flammability Rating:
UL94 V-O
Color:
Light Gray

Terminal Type:
Screw / Pressure Plate
Terminal Screw Size:
M3.5
Recommended Torque:
0.8Nm
Max. PCB's:
(1) Horizontal
Mounting:
35mm DIN Rail or optional panel mounting*

ORDERING INFORMATION

Part Number	Type	Description	PCB Connection
91.202	KU4001C	Straight Pins	Machine Solder

ACCESSORIES

Accessories	Part Number	Type
1 Meter DIN Rail	2511120/1M	TS35x7.5/1M
Screw-hole and Wire-Entry Cover Plug Set	91.201.1	SHPC
*Panel Mount Tab	93.001.5	PMA/KU

ENCLOSURE DRAWING (To convert to inches divide by 25.4.)

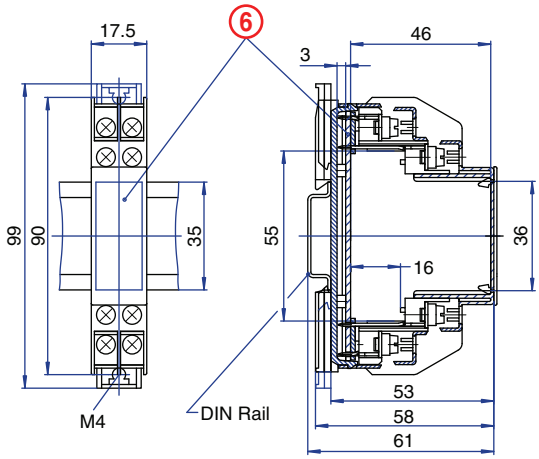

PCB DRAWING (To convert to inches divide by 25.4.)

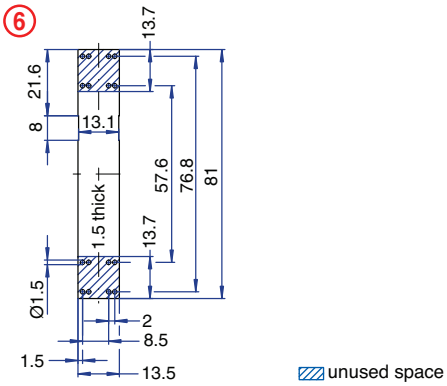

8 Terminal

Vertical PCB Spring Clamp

TECHNICAL INFORMATION

Electrical:
10A, 300V, 26-14 AWG

Housing Material:
Glass-filled Polycarbonate

Temperature Range:
Up to 125°C (257°F)

Flammability Rating:
UL94 V-O

Color:
Light Gray

Terminal Type:
Spring Cage Clamp

Terminal Screw Size:
–

Recommended Torque:
–

Max. PCB's:
(1) Vertical

Mounting:
35mm DIN Rail or optional panel mounting*

ORDERING INFORMATION

Part Number	Type	Description	PCB Connection
91.501	KU4037B	Right Angle Pins	Machine Solder/ Wire Jumper

ACCESSORIES

Accessories	Part Number	Type
1 Meter DIN Rail	2511120/1M	TS35x7.5/1M
*Panel Mount Tab	93.001.5	PMA/KU

ENCLOSURE DRAWING (To convert to inches divide by 25.4.)

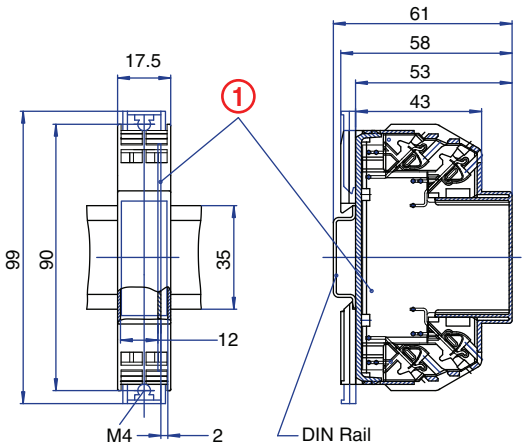

PCB DRAWING (To convert to inches divide by 25.4.)

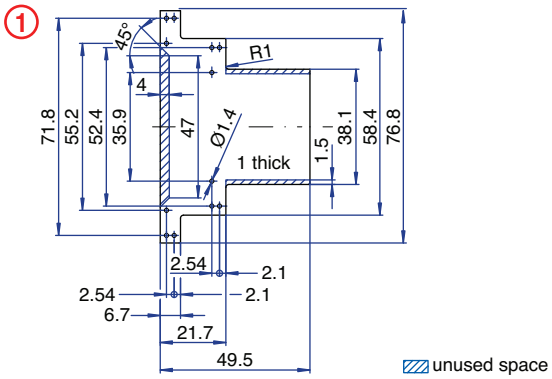

8 Terminal

Horizontal PCB Spring Clamp

TECHNICAL INFORMATION

Electrical:
10A, 300V, 26-14 AWG

Housing Material:
Glass-filled Polycarbonate

Temperature Range:
Up to 125°C (257°F)

Flammability Rating:
UL94 V-O

Color:
Light Gray

Terminal Type:
Spring Cage Clamp

Terminal Screw Size:
–

Recommended Torque:
–

Max. PCB's:
(1) Horizontal

Mounting:
35mm DIN Rail or optional panel mounting*

ORDERING INFORMATION

Part Number	Type	Description	PCB Connection
91.502	KU4037C	Straight Pins	Machine Solder

ACCESSORIES

Accessories	Part Number	Type
1 Meter DIN Rail	2511120/1M	TS35x7.5/1M
*Panel Mount Tab	93.001.5	PMA/KU

ENCLOSURE DRAWING (To convert to inches divide by 25.4.)

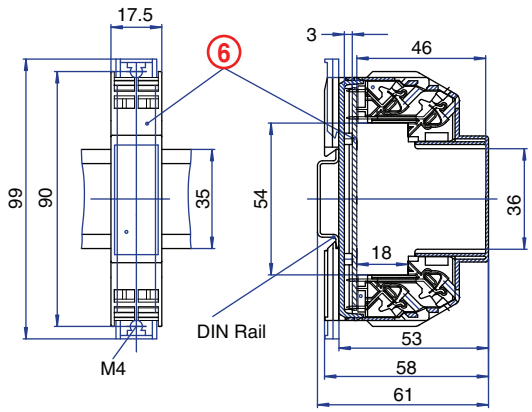

PCB DRAWING (To convert to inches divide by 25.4.)

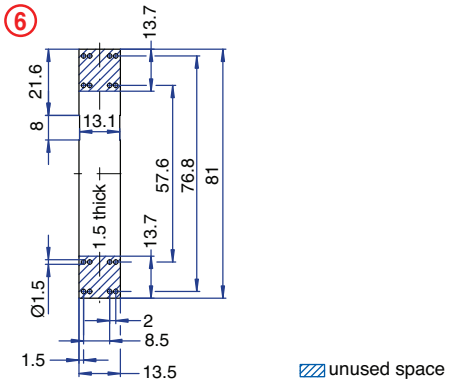

8 Terminal

Tall Vertical PCB
Screw Clamp

TECHNICAL INFORMATION

Electrical:
16A, 300V, 22-14 AWG

Housing Material:
Glass-filled Polycarbonate

Temperature Range:
Up to 125°C (257°F)

Flammability Rating:
UL94 V-O

Color:
Light Gray

Terminal Type:
Screw / Pressure Plate

Terminal Screw Size:
M3.5

Recommended Torque:
0.8Nm

Max. PCB's:
(1) Vertical

Mounting:
35mm DIN Rail or optional panel mounting*

ORDERING INFORMATION

Part Number	Type	Description	PCB Connection
91.203	KU4001BT	Right Angle Pins	Machine Solder/ Wire Jumper

ACCESSORIES

Accessories	Part Number	Type
1 Meter DIN Rail	2511120/1M	TS35x7.5/1M
Screw-hole and Wire-Entry Cover Plug Set	91.201.1	SHPC
*Panel Mount Tab	93.001.5	PMA/KU

ENCLOSURE DRAWING (To convert to inches divide by 25.4.)

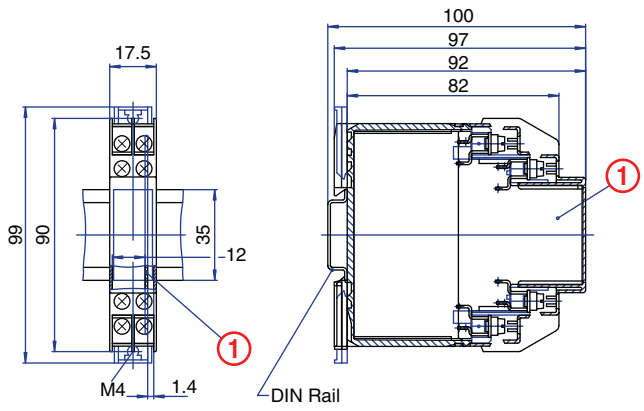

PCB DRAWING (To convert to inches divide by 25.4.)

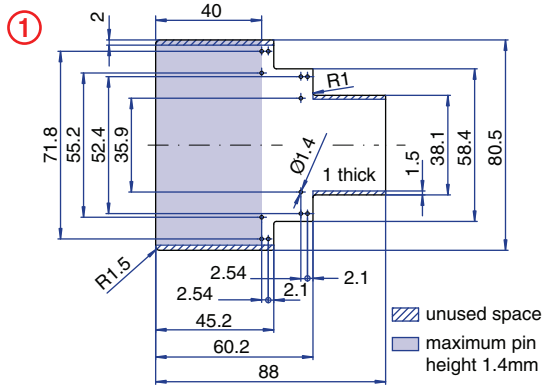

8 Terminal

Tall Vertical PCB
Spring Clamp

TECHNICAL INFORMATION

Electrical:
10A, 300V, 26-14 AWG

Housing Material:
Glass-filled Polycarbonate

Temperature Range:
Up to 125°C (257°F)

Flammability Rating:
UL94 V-O

Color:
Light Gray

Terminal Type:
Spring Cage Clamp

Terminal Screw Size:
–

Recommended Torque:
–

Max. PCB's:
(1) Vertical

Mounting:
35mm DIN Rail or optional panel mounting*

ORDERING INFORMATION

Part Number	Type	Description	PCB Connection
91.503	KU4037BT	Right Angle Pins	Machine Solder/ Wire Jumper

ACCESSORIES

Accessories	Part Number	Type
1 Meter DIN Rail	2511120/1M	TS35x7.5/1M
*Panel Mount Tab	93.001.5	PMA/KU

ENCLOSURE DRAWING (To convert to inches divide by 25.4.)

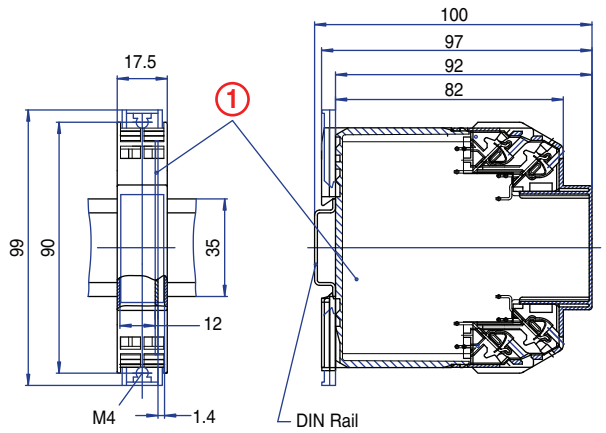

PCB DRAWING (To convert to inches divide by 25.4.)

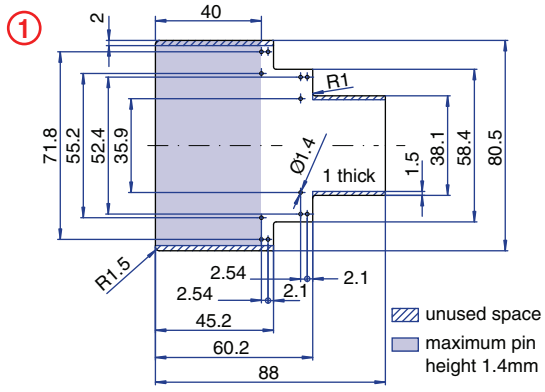

12 Terminal
with 8 Standard and 4 High Current Terminals
Vertical PCB
Screw Clamp

TECHNICAL INFORMATION

Electrical:
Standard Terminal:
16A, 300V, 22-14 AWG
High Current Terminal:
50A, 300V, 18-8 AWG

Housing Material:
Glass-filled Polycarbonate

Temperature Range:
Up to 125°C (257°F)

Flammability Rating:
UL94 V-O

Color:
Light Gray

Terminal Type:
Standard: Screw/Pressure Plate
High Current: Box Clamp

Terminal Screw Size:
M3.5 / M4

Recommended Torque:
0.8Nm/1.2Nm

Max. PCB's:
(1) Vertical

Mounting:
35mm DIN Rail or
optional panel mounting*

ORDERING INFORMATION

Part Number	Type	Description	PCB Connection
91.710	KU4088BHC	Right Angle Pins	Machine Solder/ Wire Jumper

ACCESSORIES

Accessories	Part Number	Type
1 Meter DIN Rail	2511120/1M	TS35x7.5/1M
Screw-hole and Wire-Entry Cover Plug Set	91.201.1	SHPC
*Panel Mount Tab	93.001.5	PMA/KU

ENCLOSURE DRAWING (To convert to inches divide by 25.4.)

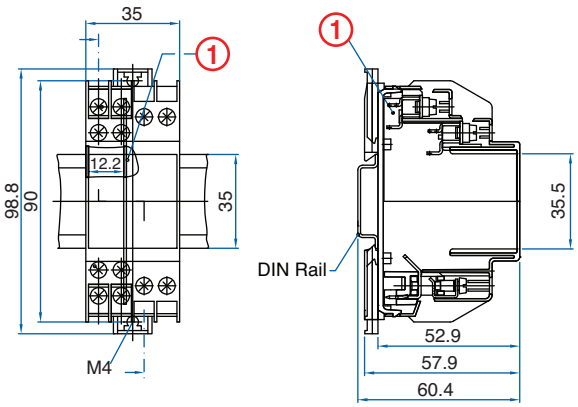

PCB DRAWING (To convert to inches divide by 25.4.)

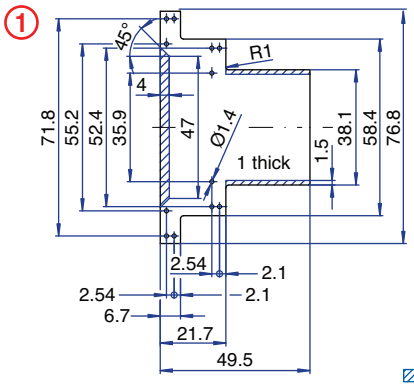

unused space

12 Terminal
with 8 Standard and 4 High Current Terminals
Horizontal PCB
Screw Clamp

TECHNICAL INFORMATION

Electrical:
Standard Terminal:
16A, 300V, 22-14 AWG
High Current Terminal:
50A, 300V, 18-8 AWG

Housing Material:
Glass-filled Polycarbonate

Temperature Range:
Up to 125°C (257°F)

Flammability Rating:
UL94 V-O

Color:
Light Gray

Terminal Type:
Standard: Screw/Pressure Plate
High Current: Box Clamp

Terminal Screw Size:
M3.5 / M4

Recommended Torque:
0.8Nm/1.2Nm

Max. PCB's:
(1) Horizontal

Mounting:
35mm DIN Rail or
optional panel mounting*

ORDERING INFORMATION

Part Number	Type	Description	PCB Connection
91.720	KU4088CHC	Straight Pins	Machine Solder Wire Jumper

ACCESSORIES

Accessories	Part Number	Type
1 Meter DIN Rail	2511120/1M	TS35x7.5/1M
Screw-hole and Wire-Entry Cover Plug Set	91.201.1	SHPC
*Panel Mount Tab	93.001.5	PMA/KU

ENCLOSURE DRAWING (To convert to inches divide by 25.4.)

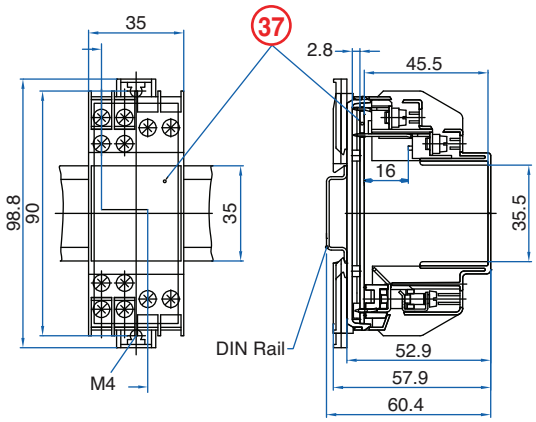

PCB DRAWING (To convert to inches divide by 25.4.)

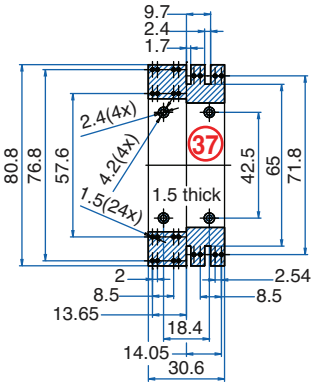

unused space

16 Terminal

Vertical PCB
Screw Clamp

TECHNICAL INFORMATION

Electrical:
16A, 300V, 22-14 AWG
Housing Material:
Glass-filled Polycarbonate
Temperature Range:
Up to 125°C (257°F)
Flammability Rating:
UL94 V-O
Color:
Light Gray

Terminal Type:
Screw / Pressure Plate
Terminal Screw Size:
M3.5
Recommended Torque:
0.8Nm
Max. PCB's:
(2) Vertical
Mounting:
35mm DIN Rail or optional panel mounting*

ORDERING INFORMATION

Part Number	Type	Description	PCB Connection
91.240	KU4002B	Right Angle Pins	Machine Solder/ Wire Jumper

ACCESSORIES

Accessories	Part Number	Type
1 Meter DIN Rail	2511120/1M	TS35x7.5/1M
Screw-hole and Wire-Entry Cover Plug Set	91.201.1	SHPC
*Panel Mount Tab	93.001.5	PMA/KU

ENCLOSURE DRAWING (To convert to inches divide by 25.4.)

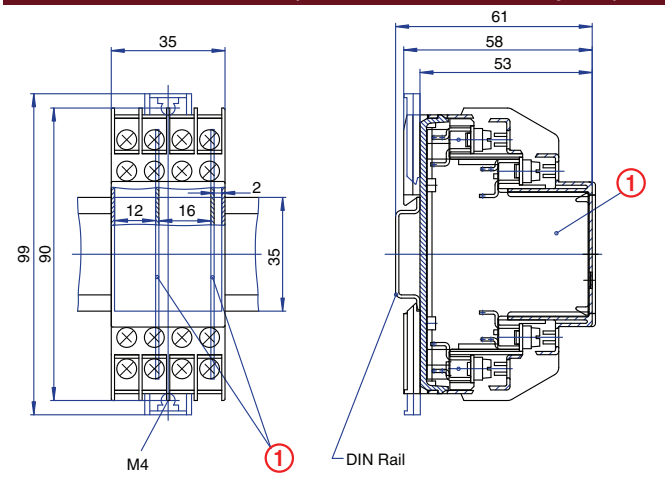

PCB DRAWING (To convert to inches divide by 25.4.)

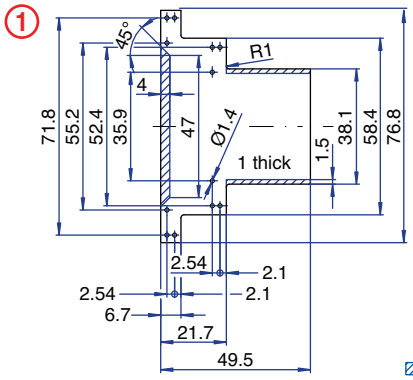

16 Terminal

Horizontal PCB
Screw Clamp

TECHNICAL INFORMATION

Electrical:
16A, 300V, 22-14 AWG
Housing Material:
Glass-filled Polycarbonate
Temperature Range:
Up to 125°C (257°F)
Flammability Rating:
UL94 V-O
Color:
Light Gray

Terminal Type:
Screw / Pressure Plate
Terminal Screw Size:
M3.5
Recommended Torque:
0.8Nm
Max. PCB's:
(1) Horizontal
Mounting:
35mm DIN Rail or optional panel mounting*

ORDERING INFORMATION

Part Number	Type	Description	PCB Connection
91.220	KU4002C	Straight Pins	Machine Solder

ACCESSORIES

Accessories	Part Number	Type
1 Meter DIN Rail	2511120/1M	TS35x7.5/1M
Screw-hole and Wire-Entry Cover Plug Set	91.201.1	SHPC
*Panel Mount Tab	93.001.5	PMA/KU

ENCLOSURE DRAWING (To convert to inches divide by 25.4.)

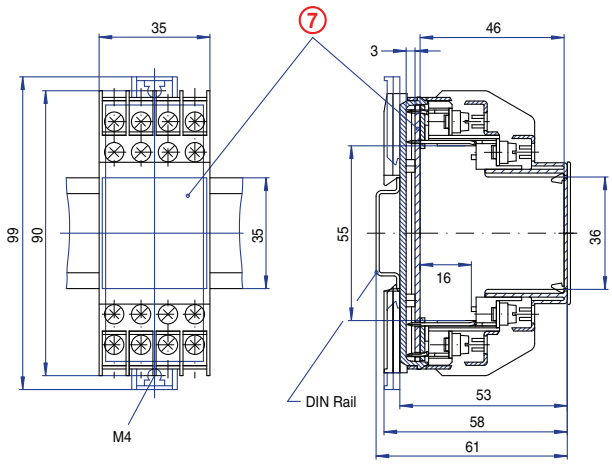

PCB DRAWING (To convert to inches divide by 25.4.)

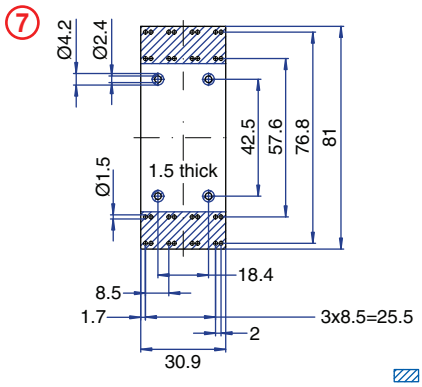

16 Terminal

Vertical PCB
Spring Clamp

TECHNICAL INFORMATION

Electrical:
10A, 300V, 26-14 AWG

Housing Material:
Glass-filled Polycarbonate

Temperature Range:
Up to 125°C (257°F)

Flammability Rating:
UL94 V-O

Color:
Light Gray

Terminal Type:
Spring Cage Clamp

Terminal Screw Size:
–

Recommended Torque:
–

Max. PCB's:
(2) Vertical

Mounting:
35mm DIN Rail or optional panel mounting*

ORDERING INFORMATION

Part Number	Type	Description	PCB Connection
91.540	KU4038B	Right Angle Pins	Machine Solder/ Wire Jumper

ACCESSORIES

Accessories	Part Number	Type
1 Meter DIN Rail	2511120/1M	TS35x7.5/1M
*Panel Mount Tab	93.001.5	PMA/KU

ENCLOSURE DRAWING (To convert to inches divide by 25.4.)

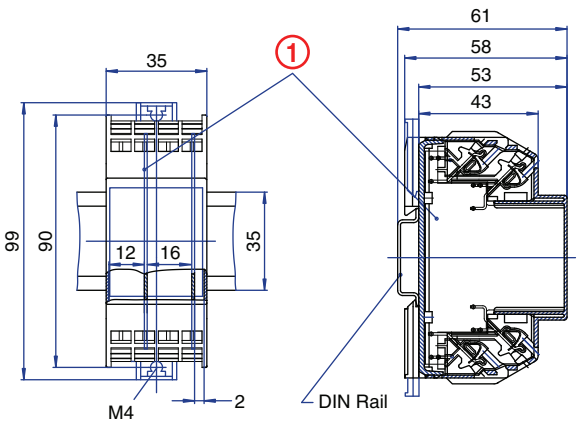

PCB DRAWING (To convert to inches divide by 25.4.)

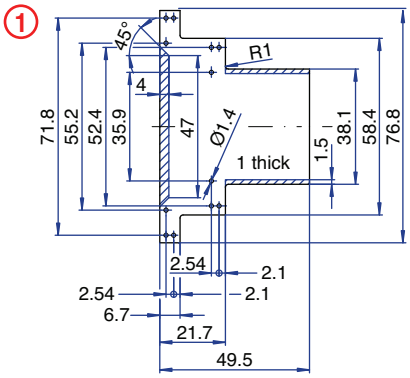

unused space

16 Terminal

Horizontal PCB
Spring Clamp

TECHNICAL INFORMATION

Electrical:
10A, 300V, 26-14 AWG

Housing Material:
Glass-filled Polycarbonate

Temperature Range:
Up to 125°C (257°F)

Flammability Rating:
UL94 V-O

Color:
Light Gray

Terminal Type:
Spring Cage Clamp

Terminal Screw Size:
–

Recommended Torque:
–

Max. PCB's:
(1) Horizontal

Mounting:
35mm DIN Rail or optional panel mounting*

ORDERING INFORMATION

Part Number	Type	Description	PCB Connection
91.520	KU4038C	Straight Pins	Machine Solder

ACCESSORIES

Accessories	Part Number	Type
1 Meter DIN Rail	2511120/1M	TS35x7.5/1M
*Panel Mount Tab	93.001.5	PMA/KU

ENCLOSURE DRAWING (To convert to inches divide by 25.4.)

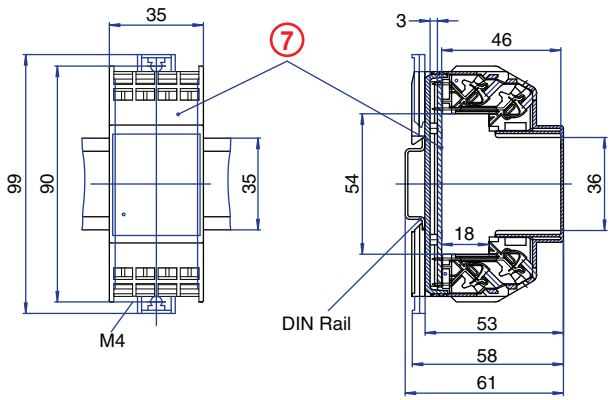

PCB DRAWING (To convert to inches divide by 25.4.)

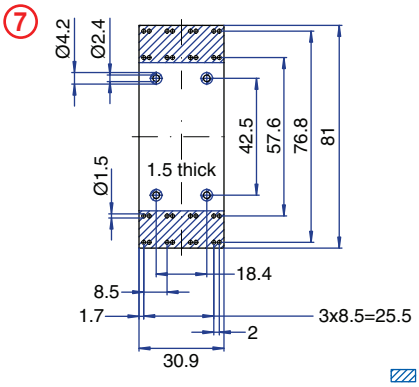

unused space

16 Terminal

Tall Vertical PCB
Screw Clamp

TECHNICAL INFORMATION

Electrical:
16A, 300V, 22-14 AWG

Housing Material:
Glass-filled Polycarbonate

Temperature Range:
Up to 125°C (257°F)

Flammability Rating:
UL94 V-O

Color:
Light Gray

Terminal Type:
Screw / Pressure Plate

Terminal Screw Size:
M3.5

Recommended Torque:
0.8Nm

Max. PCB's:
(2) Vertical

Mounting:
35mm DIN Rail or optional panel mounting*

ORDERING INFORMATION

Part Number	Type	Description	PCB Connection
91.243	KU4002BT	Right Angle Pins	Machine Solder/ Wire Jumper

ACCESSORIES

Accessories	Part Number	Type
1 Meter DIN Rail	2511120/1M	TS35x7.5/1M
Screw-hole and Wire-Entry Cover Plug Set	91.201.1	SHPC
*Panel Mount Tab	93.001.5	PMA/KU

ENCLOSURE DRAWING (To convert to inches divide by 25.4.)

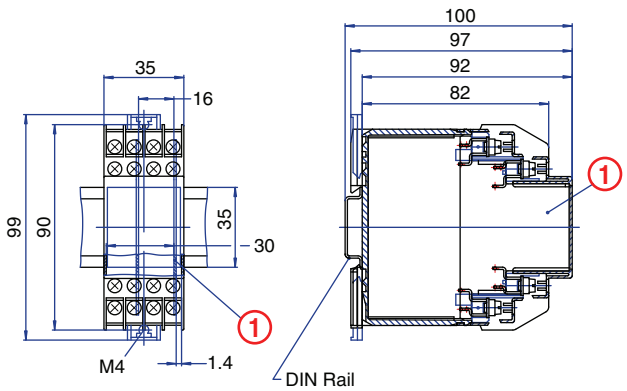

PCB DRAWING (To convert to inches divide by 25.4.)

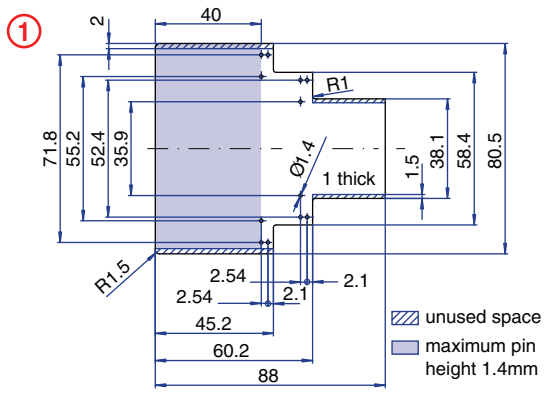

16 Terminal

Tall Vertical PCB
Spring Clamp

TECHNICAL INFORMATION

Electrical:
10A, 300V, 26-14 AWG

Housing Material:
Glass-filled Polycarbonate

Temperature Range:
Up to 125°C (257°F)

Flammability Rating:
UL94 V-O

Color:
Light Gray

Terminal Type:
Spring Cage Clamp

Terminal Screw Size:
–

Recommended Torque:
–

Max. PCB's:
(2) Vertical

Mounting:
35mm DIN Rail or optional panel mounting*

ORDERING INFORMATION

Part Number	Type	Description	PCB Connection
91.543	KU4038BT	Right Angle Pins	Machine Solder/ Wire Jumper

ACCESSORIES

Accessories	Part Number	Type
1 Meter DIN Rail	2511120/1M	TS35x7.5/1M
*Panel Mount Tab	93.001.5	PMA/KU

ENCLOSURE DRAWING (To convert to inches divide by 25.4.)

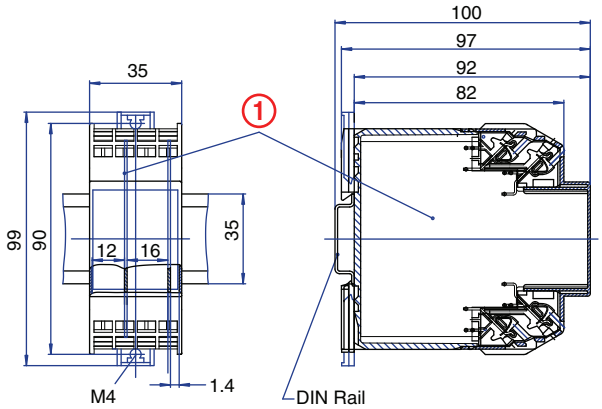

PCB DRAWING (To convert to inches divide by 25.4.)

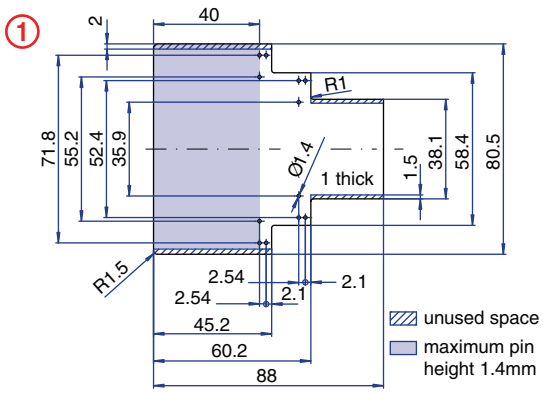

24 Terminal

Vertical PCB
Screw Clamp

TECHNICAL INFORMATION

Electrical:
16A, 300V, 22-14 AWG
Housing Material:
Glass-filled Polycarbonate
Temperature Range:
Up to 125°C (257°F)
Flammability Rating:
UL94 V-O
Color:
Light Gray

Terminal Type:
Screw / Pressure Plate
Terminal Screw Size:
M3.5
Recommended Torque:
0.8Nm
Max. PCB's:
(3) Vertical
Mounting:
35mm DIN Rail or optional panel mounting*

ORDERING INFORMATION

Part Number	Type	Description	PCB Connection
91.440	KU4084B	Right Angle Pins	Machine Solder/ Wire Jumper

ACCESSORIES

Accessories	Part Number	Type
1 Meter DIN Rail	2511120/1M	TS35x7.5/1M
Screw-hole and Wire-Entry Cover Plug Set	91.201.1	SHPC
*Panel Mount Tab	93.001.5	PMA/KU

ENCLOSURE DRAWING (To convert to inches divide by 25.4.)

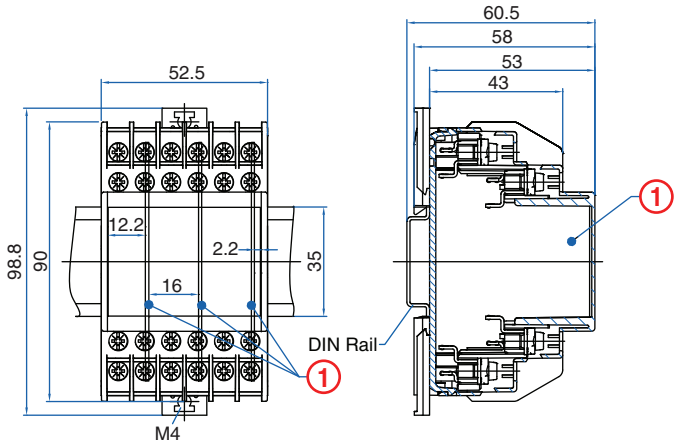

PCB DRAWING (To convert to inches divide by 25.4.)

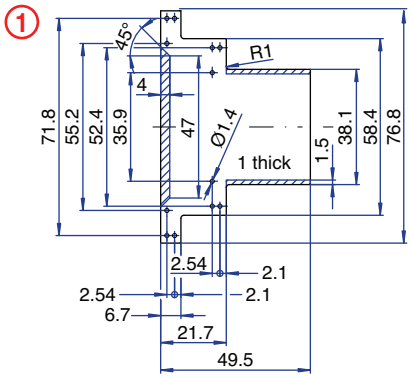

unused space

24 Terminal

Horizontal PCB
Screw Clamp

TECHNICAL INFORMATION

Electrical:
16A, 300V, 22-14 AWG
Housing Material:
Glass-filled Polycarbonate
Temperature Range:
Up to 125°C (257°F)
Flammability Rating:
UL94 V-O
Color:
Light Gray

Terminal Type:
Screw / Pressure Plate
Terminal Screw Size:
M3.5
Recommended Torque:
0.8Nm
Max. PCB's:
(1) Horizontal
Mounting:
35mm DIN Rail or optional panel mounting*

ORDERING INFORMATION

Part Number	Type	Description	PCB Connection
91.420	KU4084C	Straight Pins	Machine Solder

ACCESSORIES

Accessories	Part Number	Type
1 Meter DIN Rail	2511120/1M	TS35x7.5/1M
Screw-hole and Wire-Entry Cover Plug Set	91.201.1	SHPC
*Panel Mount Tab	93.001.5	PMA/KU

ENCLOSURE DRAWING (To convert to inches divide by 25.4.)

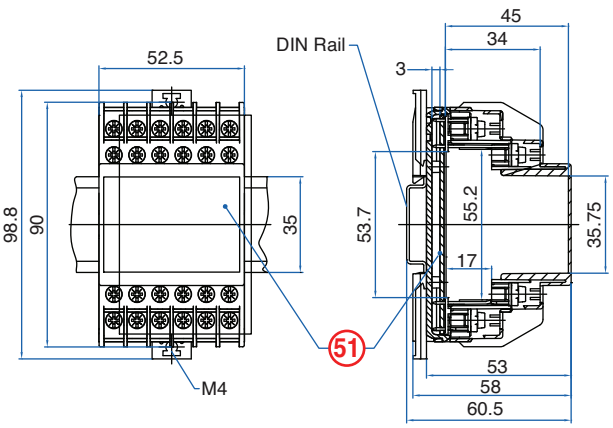

PCB DRAWING (To convert to inches divide by 25.4.)

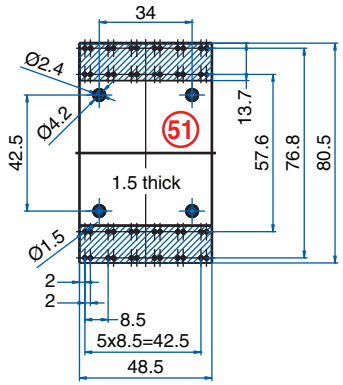

unused space

24 Terminal

Tall Vertical
PCB Screw Clamp

TECHNICAL INFORMATION

Electrical:
16A, 300V, 22-14 AWG

Housing Material:
Glass-filled Polycarbonate

Temperature Range:
Up to 125°C (257°F)

Flammability Rating:
UL94 V-O

Color:
Light Gray

Terminal Type:
Screw / Pressure Plate

Terminal Screw Size:
M3.5

Recommended Torque:
0.8Nm

Max. PCB's:
(3) Vertical

Mounting:
35mm DIN Rail or
optional panel mounting*

ORDERING INFORMATION

Part Number	Type	Description	PCB Connection
91.443	KU4084BT	Right Angle Pins	Machine Solder/ Wire Jumper

ACCESSORIES

Accessories	Part Number	Type
1 Meter DIN Rail	2511120/1M	TS35x7.5/1M
Screw-hole and Wire-Entry Cover Plug Set	91.201.1	SHPC
*Panel Mount Tab	93.001.5	PMA/KU

ENCLOSURE DRAWING (To convert to inches divide by 25.4.)

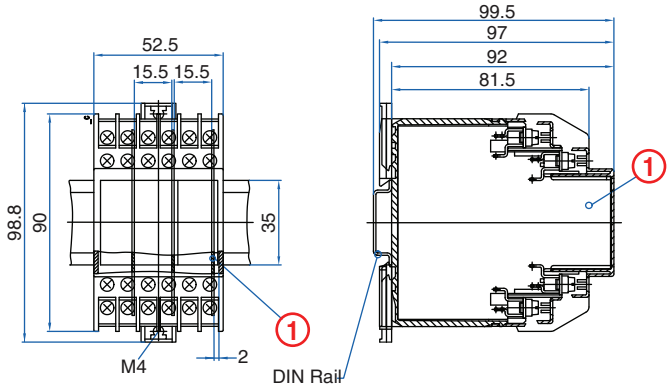

PCB DRAWING (To convert to inches divide by 25.4.)

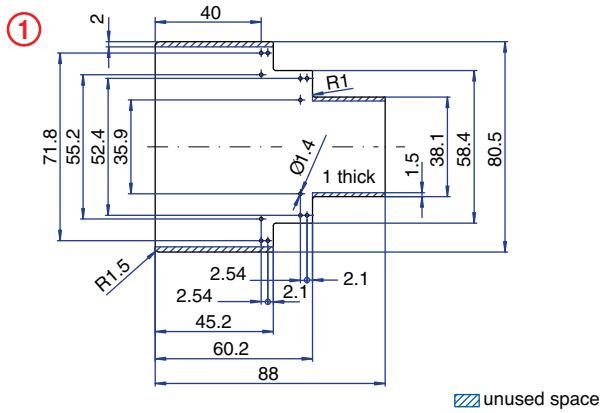

24 Terminal
with 16 Standard and 8 High Current Terminals
Vertical PCB
Screw Clamp

TECHNICAL INFORMATION

Electrical:
Standard Terminal:
16A, 300V, 22-14 AWG
High Current Terminal:
50A, 300V, 18-8 AWG

Housing Material:
Glass-filled Polycarbonate

Temperature Range:
Up to 125°C (257°F)

Flammability Rating:
UL94 V-O

Color: Light Gray

Terminal Type:
Standard: Screw/Pressure Plate
High Current: Box Clamp

Terminal Screw Size:
M3.5 / M4

Recommended Torque:
0.8Nm / 1.2Nm

Max. PCB's:
(2) Vertical

Mounting:
35mm DIN Rail or
optional panel mounting*

ORDERING INFORMATION

Part Number	Type	Description	PCB Connection
91.730	KU4089BHC	Right Angle Pins	Machine Solder/ Wire Jumper

ACCESSORIES

Accessories	Part Number	Type
1 Meter DIN Rail	2511120/1M	TS35x7.5/1M
Screw-hole and Wire-Entry Cover Plug Set	91.201.1	SHPC
*Panel Mount Tab	93.001.5	PMA/KU

ENCLOSURE DRAWING (To convert to inches divide by 25.4.)

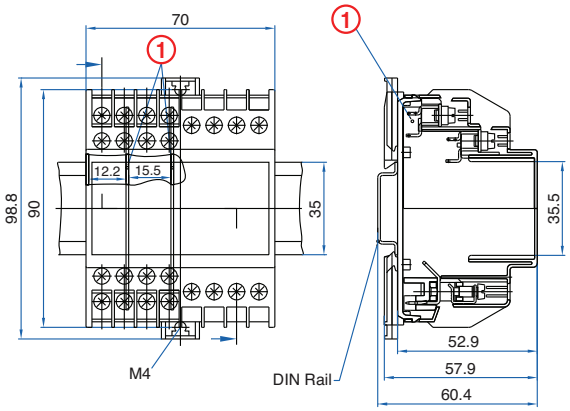

PCB DRAWING (To convert to inches divide by 25.4.)

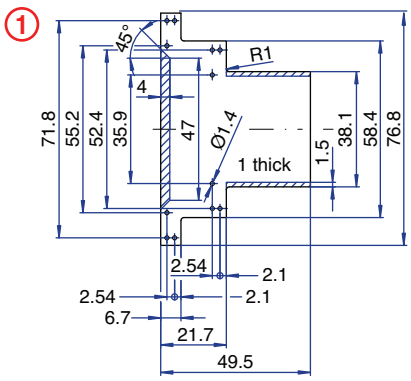

unused space

24 Terminal
with 16 Standard and 8 High Current Terminals
Horizontal PCB
Screw Clamp

TECHNICAL INFORMATION

Electrical:
Standard Terminal:
16A, 300V, 22-14 AWG
High Current Terminal:
50A, 300V, 18-8 AWG

Housing Material:
Glass-filled Polycarbonate

Temperature Range:
Up to 125°C (257°F)

Flammability Rating:
UL94 V-O

Color: Light Gray

Terminal Type:
Standard: Screw/Pressure Plate
High Current: Box Clamp

Terminal Screw Size:
M3.5 / M4

Recommended Torque:
0.8Nm/ 1.2Nm

Max. PCB's:
(1) Horizonal, (2) Vertical

Mounting:
35mm DIN Rail or
optional panel mounting*

ORDERING INFORMATION

Part Number	Type	Description	PCB Connection
91.740	KU4089CHC	Straight Pins	Machine Solder/ Wire Jumper

ACCESSORIES

Accessories	Part Number	Type
1 Meter DIN Rail	2511120/1M	TS35x7.5/1M
Screw-hole and Wire-Entry Cover Plug Set	91.201.1	SHPC
*Panel Mount Tab	93.001.5	PMA/KU

ENCLOSURE DRAWING (To convert to inches divide by 25.4.)

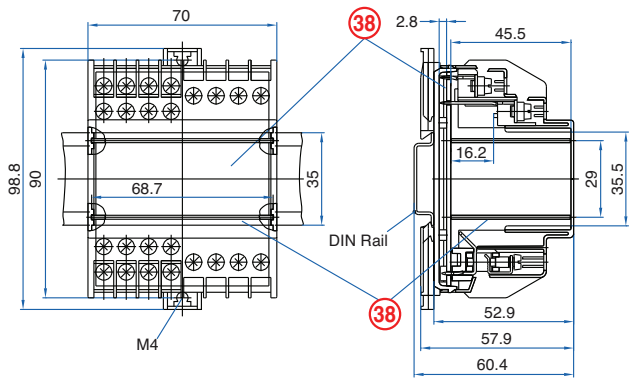

PCB DRAWING (To convert to inches divide by 25.4.)

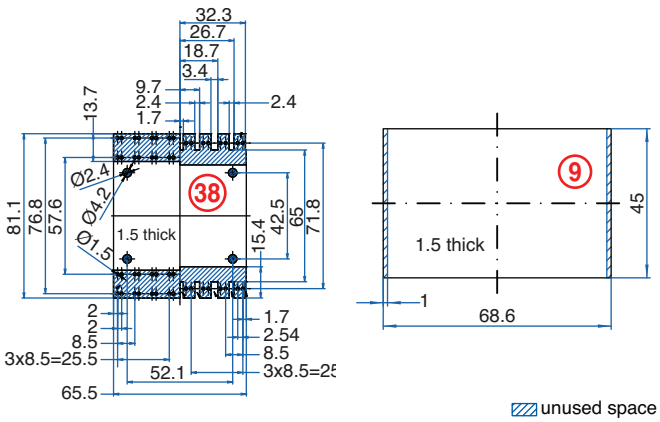

unused space

32 Terminal

Vertical PCB
Screw Clamp

TECHNICAL INFORMATION

Electrical:
16A, 300V, 22-14 AWG

Housing Material:
Glass-filled Polycarbonate

Temperature Range:
Up to 125°C (257°F)

Flammability Rating:
UL94 V-O

Color:
Light Gray

Terminal Type:
Screw / Pressure Plate

Terminal Screw Size:
M3.5

Recommended Torque:
0.8Nm

Max. PCB's:
(4) Vertical

Mounting:
35mm DIN Rail or optional panel mounting*

ORDERING INFORMATION

Part Number	Type	Description	PCB Connection
91.280	KU4003B	Right Angle Pins	Machine Solder/ Wire Jumper

ACCESSORIES

Accessories	Part Number	Type
1 Meter DIN Rail	2511120/1M	TS35x7.5/1M
Screw-hole and Wire-Entry Cover Plug Set	91.201.1	SHPC
*Panel Mount Tab	93.001.5	PMA/KU

ENCLOSURE DRAWING (To convert to inches divide by 25.4.)

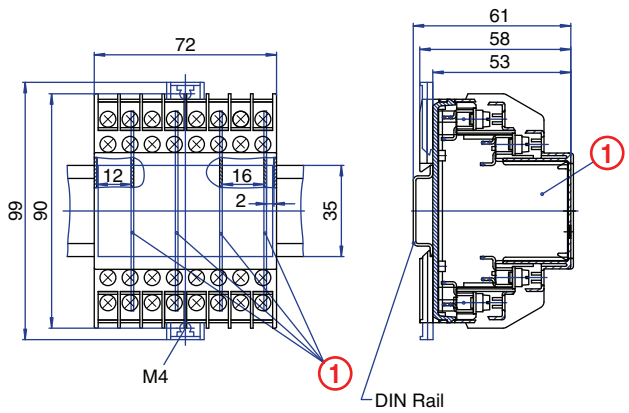

PCB DRAWING (To convert to inches divide by 25.4.)

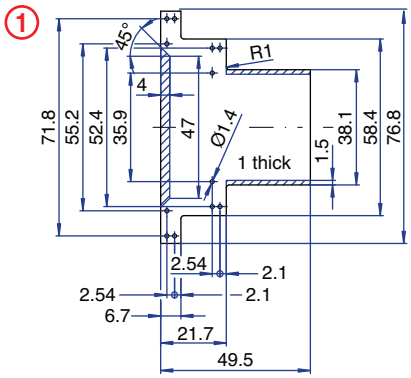

unused space

32 Terminal

Horizontal PCB
Screw Clamp

TECHNICAL INFORMATION

Electrical:
16A, 300V, 22-14 AWG

Housing Material:
Glass-filled Polycarbonate

Temperature Range:
Up to 125°C (257°F)

Flammability Rating:
UL94 V-O

Color:
Light Gray

Terminal Type:
Screw / Pressure Plate

Terminal Screw Size:
M3.5

Recommended Torque:
0.8Nm

Max. PCB's:
(1) Horizontal, (2) Vertical

Mounting:
35mm DIN Rail or optional panel mounting*

ORDERING INFORMATION

Part Number	Type	Description	PCB Connection
91.260	KU4003C	Straight Pins	Machine Solder

ACCESSORIES

Accessories	Part Number	Type
1 Meter DIN Rail	2511120/1M	TS35x7.5/1M
Screw-hole and Wire-Entry Cover Plug Set	91.201.1	SHPC
*Panel Mount Tab	93.001.5	PMA/KU

ENCLOSURE DRAWING (To convert to inches divide by 25.4.)

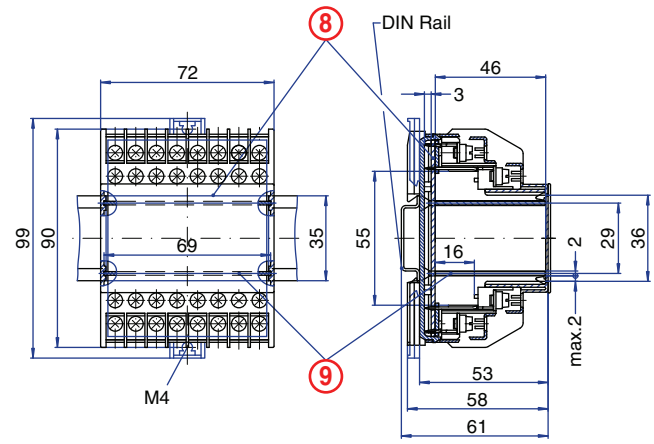

PCB DRAWING (To convert to inches divide by 25.4.)

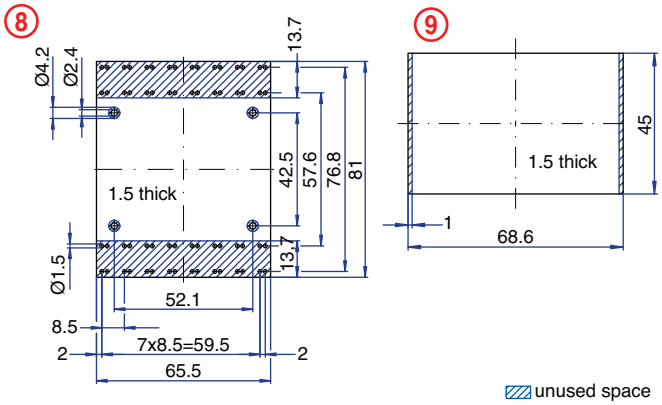

unused space

32 Terminal

Vertical PCB
Spring Clamp

TECHNICAL INFORMATION

Electrical:
10A, 300V, 26-14 AWG

Housing Material:
Glass-filled Polycarbonate

Temperature Range:
Up to 125°C (257°F)

Flammability Rating:
UL94 V-O

Color:
Light Gray

Terminal Type:
Spring Cage Clamp

Terminal Screw Size:
–

Recommended Torque:
–

Max. PCB's:
(4) Vertical

Mounting:
35mm DIN Rail or optional panel mounting*

ORDERING INFORMATION

Part Number	Type	Description	PCB Connection
91.580	KU4039B	Right Angle Pins	Machine Solder/ Wire Jumper

ACCESSORIES

Accessories	Part Number	Type
1 Meter DIN Rail	2511120/1M	TS35x7.5/1M
*Panel Mount Tab	93.001.5	PMA/KU

ENCLOSURE DRAWING (To convert to inches divide by 25.4.)

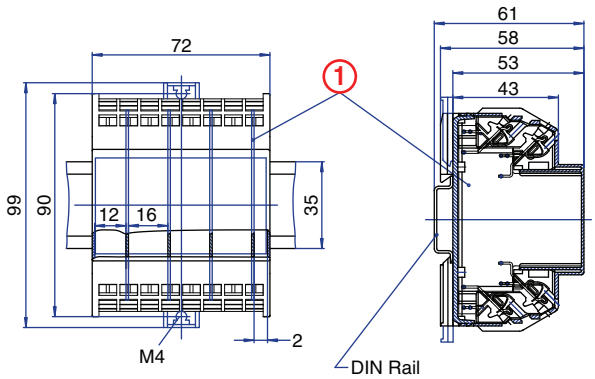

PCB DRAWING (To convert to inches divide by 25.4.)

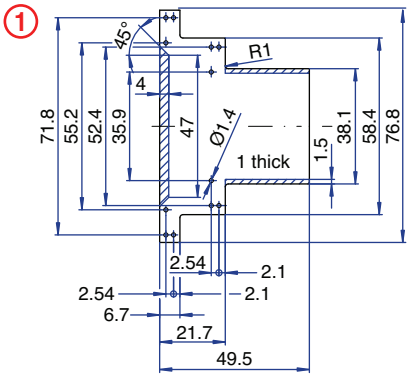

unused space

32 Terminal

Horizontal PCB
Spring Clamp

TECHNICAL INFORMATION

Electrical:
10A, 300V, 26-14 AWG

Housing Material:
Glass-filled Polycarbonate

Temperature Range:
Up to 125°C (257°F)

Flammability Rating:
UL94 V-O

Color:
Light Gray

Terminal Type:
Spring Cage Clamp

Terminal Screw Size:
–

Recommended Torque:
–

Max. PCB's:
(1) Horizontal

Mounting:
35mm DIN Rail or optional panel mounting*

ORDERING INFORMATION

Part Number	Type	Description	PCB Connection
91.560	KU4039C	Straight Pins	Machine Solder

ACCESSORIES

Accessories	Part Number	Type
1 Meter DIN Rail	2511120/1M	TS35x7.5/1M
*Panel Mount Tab	93.001.5	PMA/KU

ENCLOSURE DRAWING (To convert to inches divide by 25.4.)

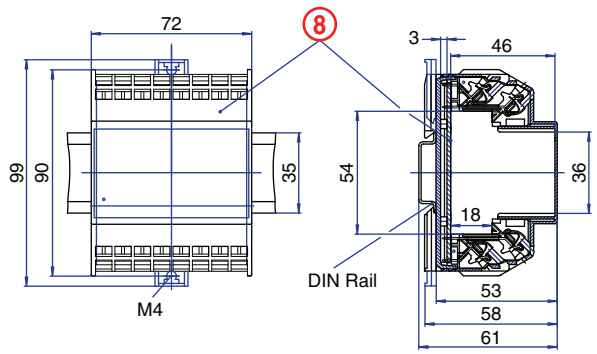

PCB DRAWING (To convert to inches divide by 25.4.)

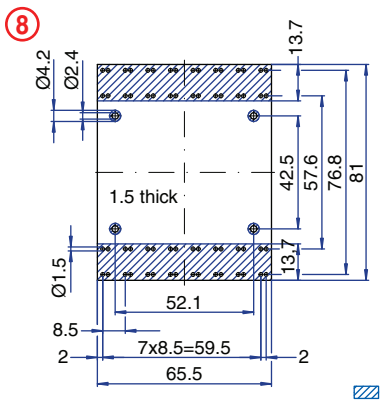

unused space

32 Terminal

Tall Vertical
PCB Screw Clamp

TECHNICAL INFORMATION

Electrical:
16A, 300V, 22-14 AWG

Housing Material:
Glass-filled Polycarbonate

Temperature Range:
Up to 125°C (257°F)

Flammability Rating:
UL94 V-O

Color:
Light Gray

Terminal Type:
Screw / Pressure Plate

Terminal Screw Size:
M3.5

Recommended Torque:
0.8Nm

Max. PCB's:
(4) Vertical

Mounting:
35mm DIN Rail or optional panel mounting*

ORDERING INFORMATION

Part Number	Type	Description	PCB Connection
91.283	KU4003BT	Right Angle Pins	Machine Solder/ Wire Jumper

ACCESSORIES

Accessories	Part Number	Type
1 Meter DIN Rail	2511120/1M	TS35x7.5/1M
Screw-hole and Wire-Entry Cover Plug Set	91.201.1	SHPC
*Panel Mount Tab	93.001.5	PMA/KU

ENCLOSURE DRAWING (To convert to inches divide by 25.4.)

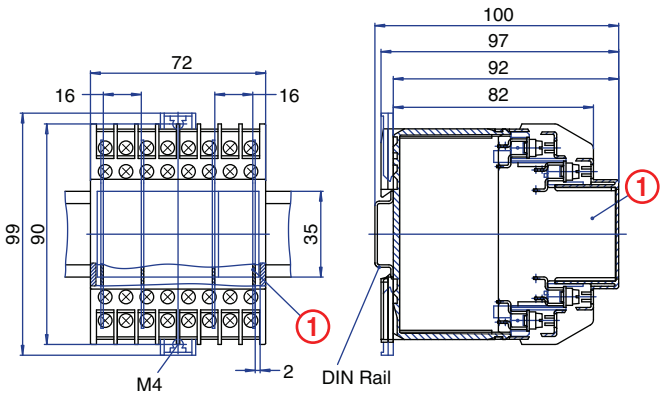

PCB DRAWING (To convert to inches divide by 25.4.)

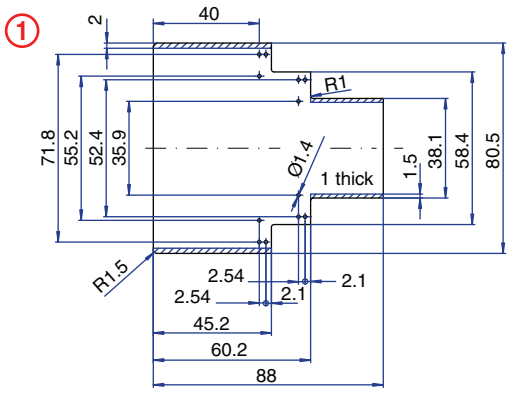

unused space

32 Terminal

Tall Vertical
PCB Spring Clamp

TECHNICAL INFORMATION

Electrical:
10A, 300V, 26-14 AWG

Housing Material:
Glass-filled Polycarbonate

Temperature Range:
Up to 125°C (257°F)

Flammability Rating:
UL94 V-O

Color:
Light Gray

Terminal Type:
Spring Cage Clamp

Terminal Screw Size:
–

Recommended Torque:
–

Max. PCB's:
(4) Vertical

Mounting:
35mm DIN Rail or optional panel mounting*

ORDERING INFORMATION

Part Number	Type	Description	PCB Connection
91.583	KU4039BT	Right Angle Pins	Machine Solder/ Wire Jumper

ACCESSORIES

Accessories	Part Number	Type
1 Meter DIN Rail	2511120/1M	TS35x7.5/1M
*Panel Mount Tab	93.001.5	PMA/KU

ENCLOSURE DRAWING (To convert to inches divide by 25.4.)

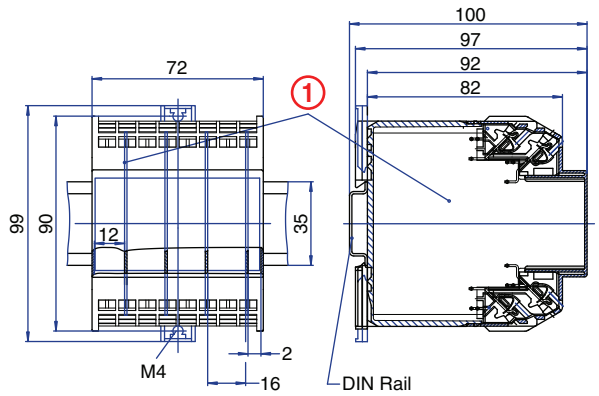

PCB DRAWING (To convert to inches divide by 25.4.)

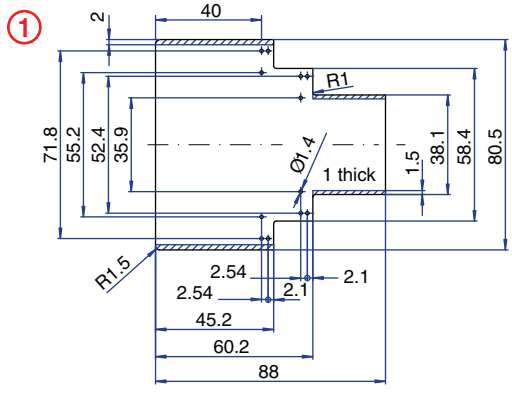

unused space

16 Terminal

Vertical PCB Screw Clamp

TECHNICAL INFORMATION

Electrical:
16A, 300V, 22-14 AWG

Housing Material:
Glass-filled Polycarbonate

Temperature Range:
Up to 125°C (257°F)

Flammability Rating:
UL94 V-O

Color:
Light Gray

Terminal Type:
Screw / Pressure Plate

Terminal Screw Size:
M3.5

Recommended Torque:
0.8Nm

Max. PCB's:
(2) Vertical

Mounting:
35mm DIN Rail or optional panel mounting*

ORDERING INFORMATION

Part Number	Type	Description	PCB Connection
91.250	KU4090B16	Right Angle Pins	Machine Solder/ Wire Jumper

ACCESSORIES

Accessories	Part Number	Type
1 Meter DIN Rail	2511120/1M	TS35x7.5/1M
Screw-hole and Wire-Entry Cover Plug Set	91.201.1	SHPC
*Panel Mount Tab	93.001.5	PMA/KU

ENCLOSURE DRAWING (To convert to inches divide by 25.4.)

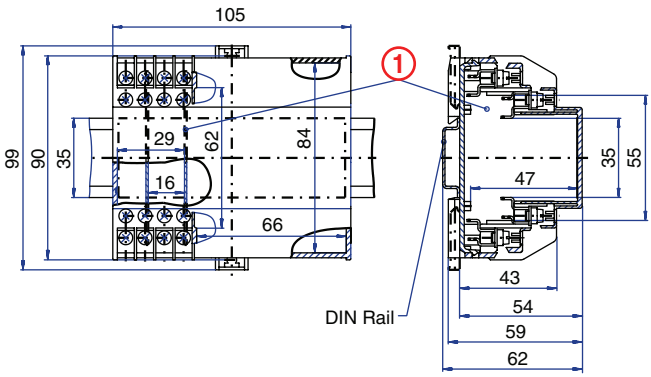

PCB DRAWING (To convert to inches divide by 25.4.)

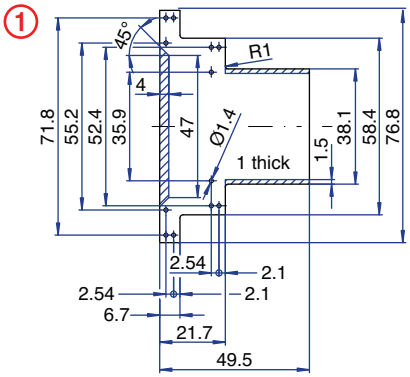

unused space

16 Terminal

Horizontal PCB Screw Clamp

TECHNICAL INFORMATION

Electrical:
16A, 300V, 22-14 AWG

Housing Material:
Glass-filled Polycarbonate

Temperature Range:
Up to 125°C (257°F)

Flammability Rating:
UL94 V-O

Color:
Light Gray

Terminal Type:
Screw / Pressure Plate

Terminal Screw Size:
M3.5

Recommended Torque:
0.8Nm

Max. PCB's:
(1) Horizontal, (2) Vertical

Mounting:
35mm DIN Rail or optional panel mounting*

ORDERING INFORMATION

Part Number	Type	Description	PCB Connection
91.230	KU4090C16	Straight Pins	Machine Solder

ACCESSORIES

Accessories	Part Number	Type
1 Meter DIN Rail	2511120/1M	TS35x7.5/1M
Screw-hole and Wire-Entry Cover Plug Set	91.201.1	SHPC
*Panel Mount Tab	93.001.5	PMA/KU

ENCLOSURE DRAWING (To convert to inches divide by 25.4.)

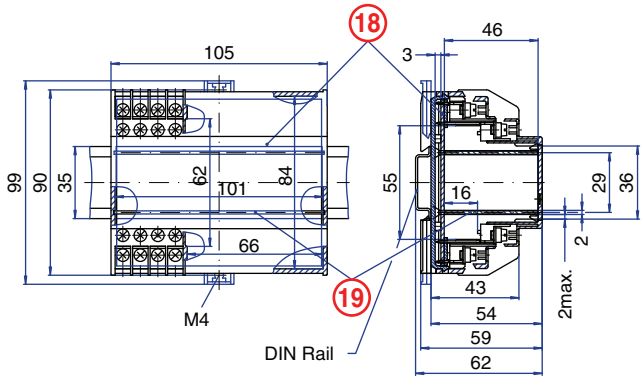

PCB DRAWING (To convert to inches divide by 25.4.)

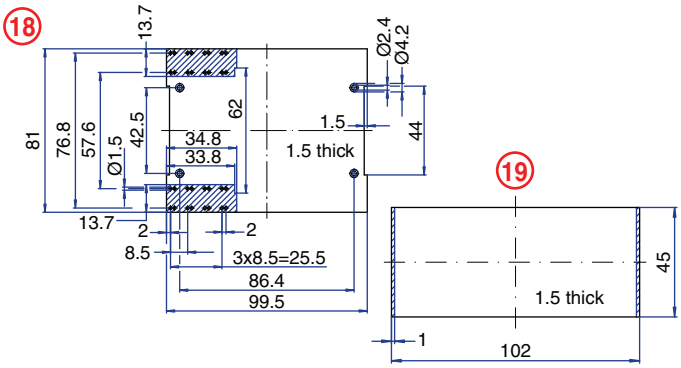

unused space

16 Terminal

Vertical PCB
Screw Clamp
with vent slots

TECHNICAL INFORMATION

Electrical:
16A, 300V, 22-14 AWG
Housing Material:
Glass-filled Polycarbonate
Temperature Range:
Up to 125°C (257°F)
Flammability Rating:
UL94 V-O
Color:
Light Gray

Terminal Type:
Screw / Pressure Plate
Terminal Screw Size:
M3.5
Recommended Torque:
0.8Nm
Max. PCB's:
(3) Vertical
Mounting:
35mm DIN Rail or optional panel mounting*

ORDERING INFORMATION

Part Number	Type	Description	PCB Connection
91.255	KU4090B16V	Right Angle Pins	Machine Solder/ Wire Jumper

ACCESSORIES

Accessories	Part Number	Type
1 Meter DIN Rail	2511120/1M	TS35x7.5/1M
Screw-hole and Wire-Entry Cover Plug Set	91.201.1	SHPC
*Panel Mount Tab	93.001.5	PMA/KU

ENCLOSURE DRAWING (To convert to inches divide by 25.4.)

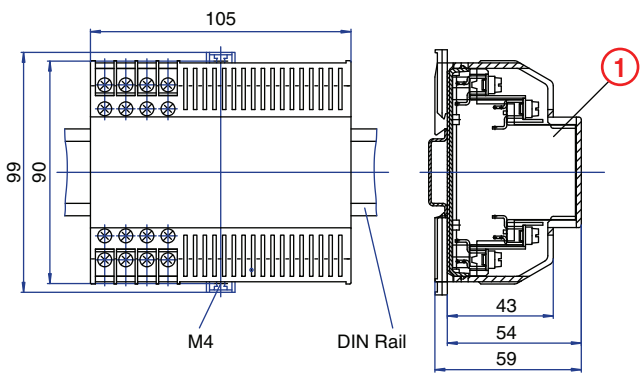

PCB DRAWING (To convert to inches divide by 25.4.)

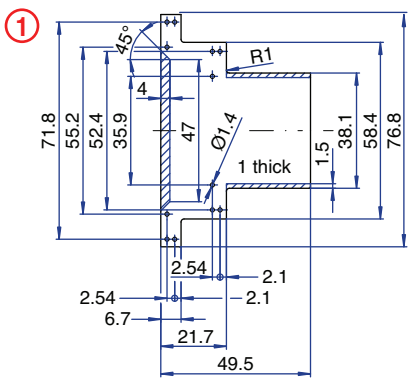

unused space

16 Terminal

Horizontal PCB
Screw Clamp
with vent slots

TECHNICAL INFORMATION

Electrical:
16A, 300V, 22-14 AWG
Housing Material:
Glass-filled Polycarbonate
Temperature Range:
Up to 125°C (257°F)
Flammability Rating:
UL94 V-O
Color:
Light Gray

Terminal Type:
Screw / Pressure Plate
Terminal Screw Size:
M3.5
Recommended Torque:
0.8Nm
Max. PCB's:
(1) Horizontal, (2) Vertical
Mounting:
35mm DIN Rail or optional panel mounting*

ORDERING INFORMATION

Part Number	Type	Description	PCB Connection
91.235	KU4090C16V	Straight Pins	Machine Solder

ACCESSORIES

Accessories	Part Number	Type
1 Meter DIN Rail	2511120/1M	TS35x7.5/1M
Screw-hole and Wire-Entry Cover Plug Set	91.201.1	SHPC
*Panel Mount Tab	93.001.5	PMA/KU

ENCLOSURE DRAWING (To convert to inches divide by 25.4.)

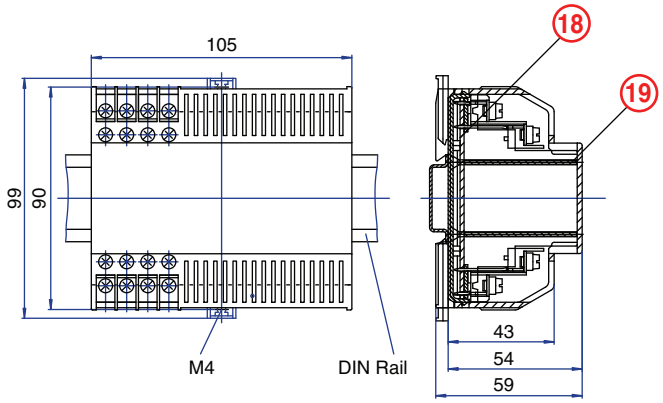

PCB DRAWING (To convert to inches divide by 25.4.)

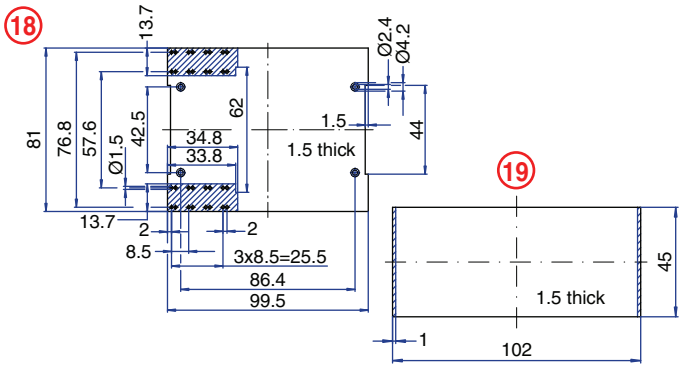

unused space

24 Terminal

Vertical PCB Screw Clamp

TECHNICAL INFORMATION

Electrical:
16A, 300V, 22-14 AWG

Housing Material:
Glass-filled Polycarbonate

Temperature Range:
Up to 125°C (257°F)

Flammability Rating:
UL94 V-O

Color:
Light Gray

Terminal Type:
Screw / Pressure Plate

Terminal Screw Size:
M3.5

Recommended Torque:
0.8Nm

Max. PCB's:
(6) Vertical

Mounting:
35mm DIN Rail or optional panel mounting*

ORDERING INFORMATION

Part Number	Type	Description	PCB Connection
91.290	KU4090B24	Right Angle Pins	Machine Solder/ Wire Jumper

ACCESSORIES

Accessories	Part Number	Type
1 Meter DIN Rail	2511120/1M	TS35x7.5/1M
Screw-hole and Wire-Entry Cover Plug Set	91.201.1	SHPC
*Panel Mount Tab	93.001.5	PMA/KU

ENCLOSURE DRAWING (To convert to inches divide by 25.4.)

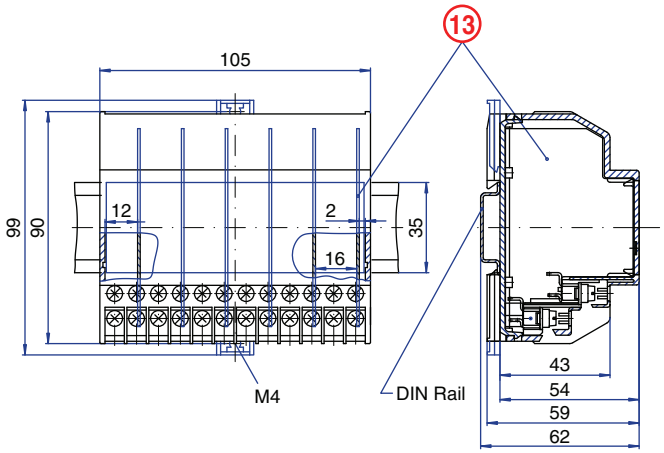

PCB DRAWING (To convert to inches divide by 25.4.)

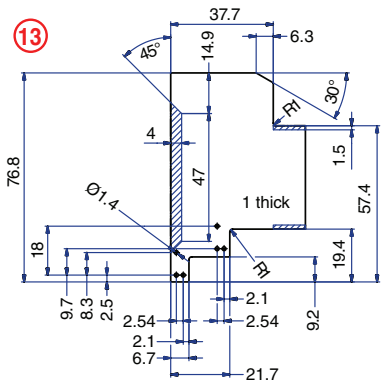

unused space

24 Terminal

Horizontal PCB Screw Clamp

TECHNICAL INFORMATION

Electrical:
16A, 300V, 22-14 AWG

Housing Material:
Glass-filled Polycarbonate

Temperature Range:
Up to 125°C (257°F)

Flammability Rating:
UL94 V-O

Color:
Light Gray

Terminal Type:
Screw / Pressure Plate

Terminal Screw Size:
M3.5

Recommended Torque:
0.8Nm

Max. PCB's:
(1) Horizontal (2) Vertical

Mounting:
35mm DIN Rail or optional panel mounting*

ORDERING INFORMATION

Part Number	Type	Description	PCB Connection
91.270	KU4090C24	Straight Pins	Machine Solder

ACCESSORIES

Accessories	Part Number	Type
1 Meter DIN Rail	2511120/1M	TS35x7.5/1M
Screw-hole and Wire-Entry Cover Plug Set	91.201.1	SHPC
*Panel Mount Tab	93.001.5	PMA/KU

ENCLOSURE DRAWING (To convert to inches divide by 25.4.)

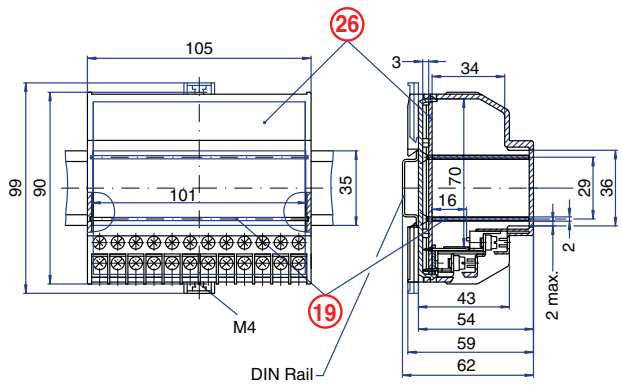

PCB DRAWING (To convert to inches divide by 25.4.)

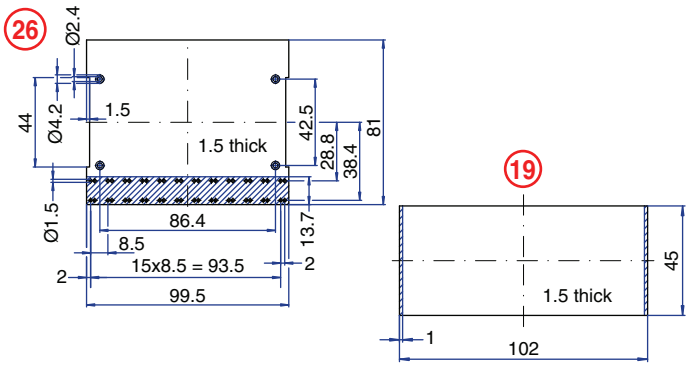

unused space

24 Terminal

Vertical PCB Spring Clamp

TECHNICAL INFORMATION

Electrical:
10A, 300V, 26-14 AWG

Housing Material:
Glass-filled Polycarbonate

Temperature Range:
Up to 125°C (257°F)

Flammability Rating:
UL94 V-O

Color:
Light Gray

Terminal Type:
Spring Cage Clamp

Terminal Screw Size:
–

Recommended Torque:
–

Max. PCB's:
(6) Vertical

Mounting:
35mm DIN Rail or optional panel mounting*

ORDERING INFORMATION

Part Number	Type	Description	PCB Connection
91.590	KU4040B	Right Angle Pins	Machine Solder/ Wire Jumper

ACCESSORIES

Accessories	Part Number	Type
1 Meter DIN Rail	2511120/1M	TS35x7.5/1M
*Panel Mount Tab	93.001.5	PMA/KU

ENCLOSURE DRAWING (To convert to inches divide by 25.4.)

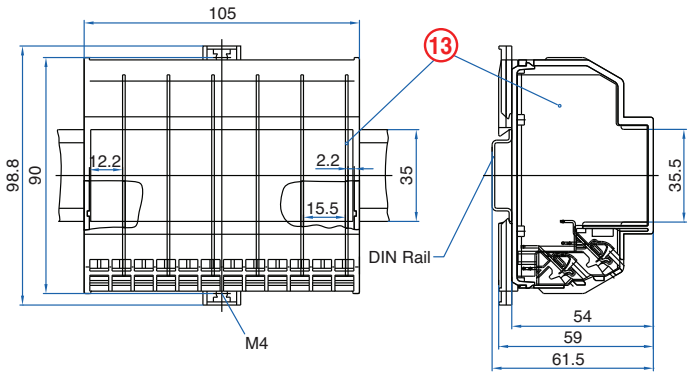

PCB DRAWING (To convert to inches divide by 25.4.)

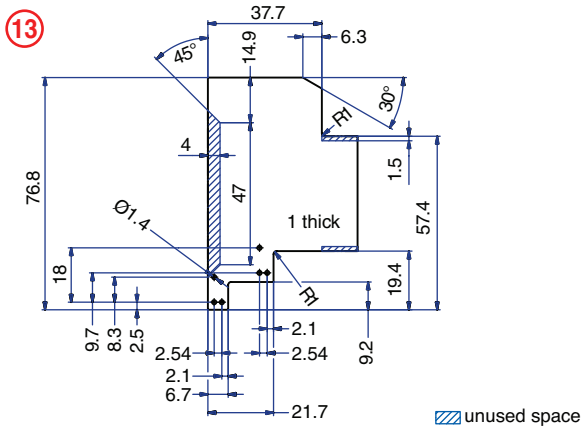

24 Terminal

Horizontal PCB Spring Clamp

TECHNICAL INFORMATION

Electrical:
10A, 300V, 26-14 AWG

Housing Material:
Glass-filled Polycarbonate

Temperature Range:
Up to 125°C (257°F)

Flammability Rating:
UL94 V-O

Color:
Light Gray

Terminal Type:
Spring Cage Clamp

Terminal Screw Size:
–

Recommended Torque:
–

Max. PCB's:
(1) Horizontal

Mounting:
35mm DIN Rail or optional panel mounting*

ORDERING INFORMATION

Part Number	Type	Description	PCB Connection
91.570	KU4040C	Straight Pins	Machine Solder

ACCESSORIES

Accessories	Part Number	Type
1 Meter DIN Rail	2511120/1M	TS35x7.5/1M
*Panel Mount Tab	93.001.5	PMA/KU

ENCLOSURE DRAWING (To convert to inches divide by 25.4.)

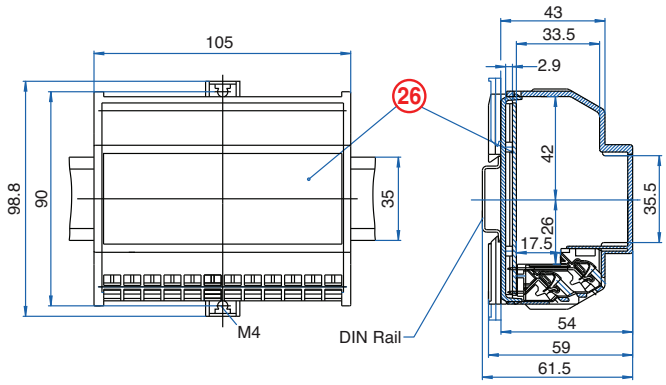

PCB DRAWING (To convert to inches divide by 25.4.)

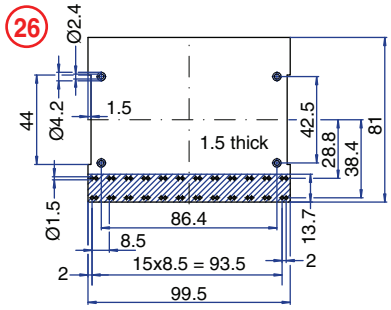

24 Terminal
with 16 Standard and 8 High Current Terminals
Vertical PCB
Screw Clamp

TECHNICAL INFORMATION

Electrical:
Standard Terminal:
16A, 300V, 22-14 AWG
High Current Terminal:
50A, 300V, 18-8 AWG

Housing Material:
Glass-filled Polycarbonate

Temperature Range:
Up to 125°C (257°F)

Flammability Rating:
UL94 V-O

Color: Light Gray

Terminal Type:
Standard: Screw/Pressure Plate
High Current: Box Clamp

Terminal Screw Size:
M3.5 / M4

Recommended Torque:
0.8Nm / 1.2Nm

Max. PCB's:
(3) Vertical

Mounting:
35mm DIN Rail or
optional panel mounting*

ORDERING INFORMATION

Part Number	Type	Description	PCB Connection
91.750	KU4090BHC	Right Angle Pins	Machine Solder/ Wire Jumper

ACCESSORIES

Accessories	Part Number	Type
1 Meter DIN Rail	2511120/1M	TS35x7.5/1M
Screw-hole and Wire-Entry Cover Plug Set	91.201.1	SHPC
*Panel Mount Tab	93.001.5	PMA/KU

ENCLOSURE DRAWING (To convert to inches divide by 25.4.)

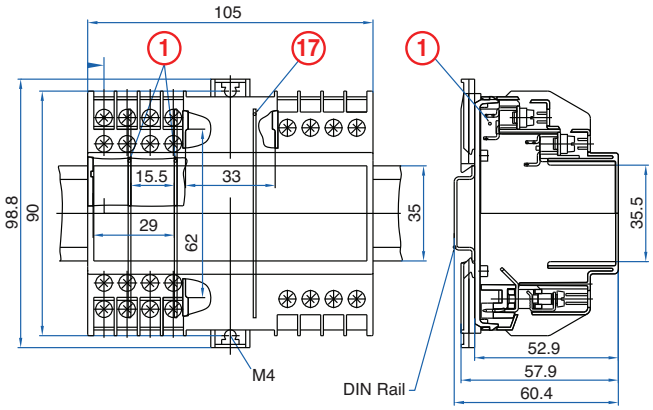

PCB DRAWING (To convert to inches divide by 25.4.)

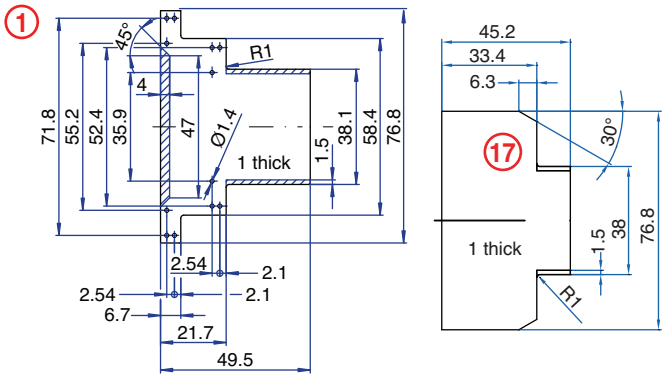

unused space

24 Terminal
with 16 Standard and 8 High Current Terminals
Vertical PCB
Screw Clamp

TECHNICAL INFORMATION

Electrical:
Standard Terminal:
16A, 300V, 22-14 AWG
High Current Terminal:
50A, 300V, 18-8 AWG

Housing Material:
Glass-filled Polycarbonate

Temperature Range:
Up to 125°C (257°F)

Flammability Rating:
UL94 V-O

Color: Light Gray

Terminal Type:
Standard: Screw/Pressure Plate
High Current: Box Clamp

Terminal Screw Size:
M3.5 / M4

Recommended Torque:
0.8Nm / 1.2Nm

Max. PCB's:
(1) Horizontal, (2) Vertical

Mounting:
35mm DIN Rail or
optional panel mounting*

ORDERING INFORMATION

Part Number	Type	Description	PCB Connection
91.760	KU4090CHC	Straight Pins	Machine Solder/ Wire Jumper

ACCESSORIES

Accessories	Part Number	Type
1 Meter DIN Rail	2511120/1M	TS35x7.5/1M
Screw-hole and Wire-Entry Cover Plug Set	91.201.1	SHPC
*Panel Mount Tab	93.001.5	PMA/KU

ENCLOSURE DRAWING (To convert to inches divide by 25.4.)

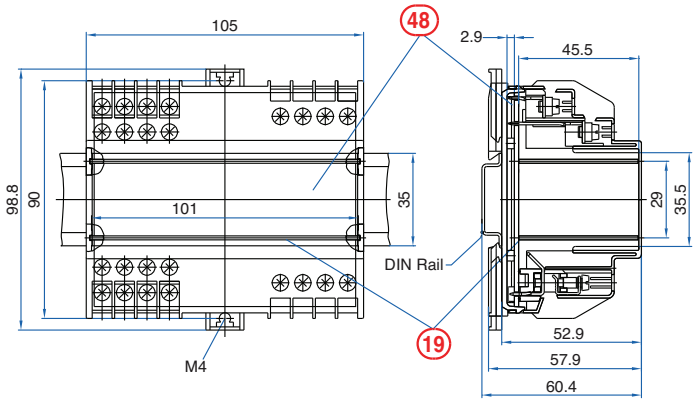

PCB DRAWING (To convert to inches divide by 25.4.)

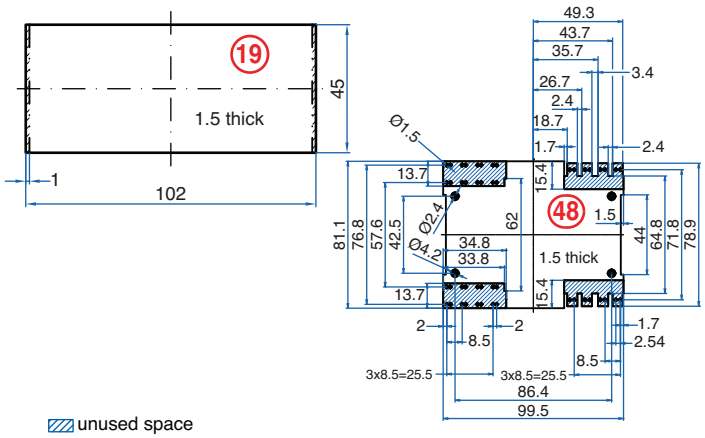

unused space

48 Terminal

Vertical PCB Screw Clamp

TECHNICAL INFORMATION

Electrical:
16A, 300V, 22-14 AWG

Housing Material:
Glass-filled Polycarbonate

Temperature Range:
Up to 125°C (257°F)

Flammability Rating:
UL94 V-O

Color:
Light Gray

Terminal Type:
Screw / Pressure Plate

Terminal Screw Size:
M3.5

Recommended Torque:
0.8Nm

Max. PCB's:
(6) Vertical

Mounting:
35mm DIN Rail or optional panel mounting*

ORDERING INFORMATION

Part Number	Type	Description	PCB Connection
91.330	KU4090B48	Right Angle Pins	Machine Solder/ Wire Jumper

ACCESSORIES

Accessories	Part Number	Type
1 Meter DIN Rail	2511120/1M	TS35x7.5/1M
Screw-hole and Wire-Entry Cover Plug Set	91.201.1	SHPC
*Panel Mount Tab	93.001.5	PMA/KU

ENCLOSURE DRAWING (To convert to inches divide by 25.4.)

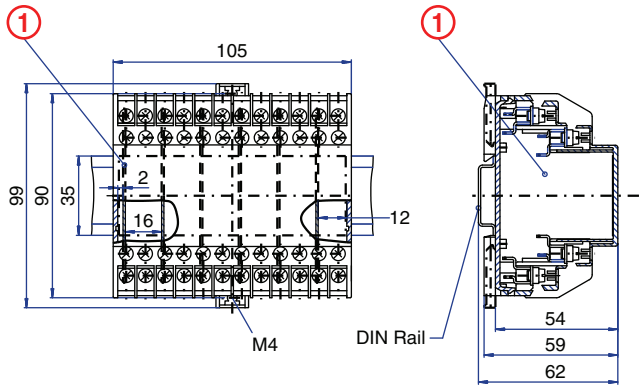

PCB DRAWING (To convert to inches divide by 25.4.)

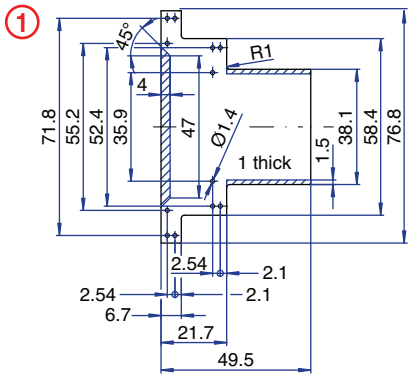

unused space

48 Terminal

Horizontal PCB Screw Clamp

TECHNICAL INFORMATION

Electrical:
16A, 300V, 22-14 AWG

Housing Material:
Glass-filled Polycarbonate

Temperature Range:
Up to 125°C (257°F)

Flammability Rating:
UL94 V-O

Color:
Light Gray

Terminal Type:
Screw / Pressure Plate

Terminal Screw Size:
M3.5

Recommended Torque:
0.8Nm

Max. PCB's:
(1) Horizontal, (2) Vertical

Mounting:
35mm DIN Rail or optional panel mounting*

ORDERING INFORMATION

Part Number	Type	Description	PCB Connection
91.310	KU4090C48	Straight Pins	Machine Solder

ACCESSORIES

Accessories	Part Number	Type
1 Meter DIN Rail	2511120/1M	TS35x7.5/1M
Screw-hole and Wire-Entry Cover Plug Set	91.201.1	SHPC
*Panel Mount Tab	93.001.5	PMA/KU

ENCLOSURE DRAWING (To convert to inches divide by 25.4.)

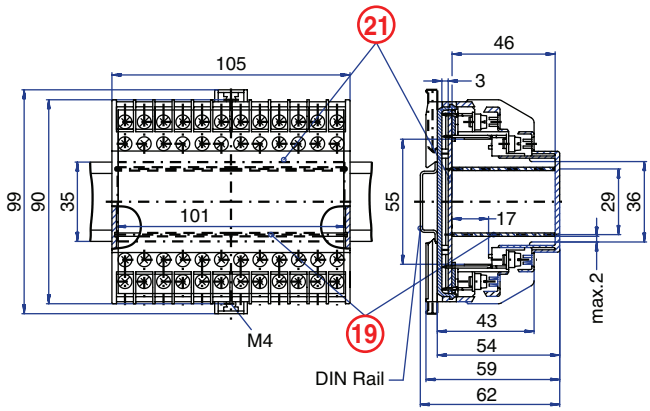

PCB DRAWING (To convert to inches divide by 25.4.)

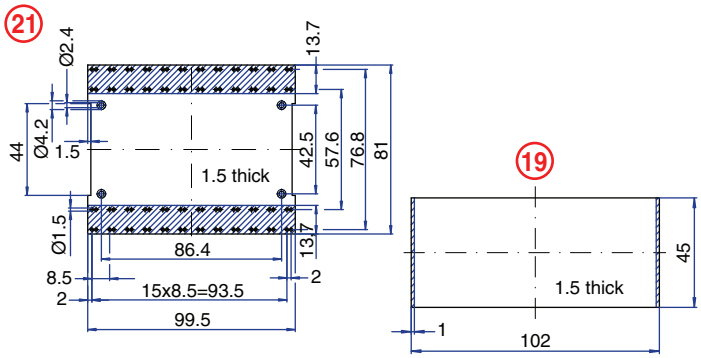

unused space

32 Terminal

Vertical PCB
Screw Clamp
terminals on one side only

TECHNICAL INFORMATION

Electrical:
16A, 300V, 22-14 AWG
Housing Material:
Glass-filled Polycarbonate
Temperature Range:
Up to 125°C (257°F)
Flammability Rating:
UL94 V-O
Color:
Light Gray

Terminal Type:
Screw / Pressure Plate
Terminal Screw Size:
M3.5
Recommended Torque:
0.8Nm
Max. PCB's:
(8) Vertical
Mounting:
35mm DIN Rail or optional panel mounting*

ORDERING INFORMATION

Part Number	Type	Description	PCB Connection
91.320	KU4011B	Right Angle Pins	Machine Solder/ Wire Jumper

ACCESSORIES

Accessories	Part Number	Type
1 Meter DIN Rail	2511120/1M	TS35x7.5/1M
Screw-hole and Wire-Entry Cover Plug Set	91.201.1	SHPC
*Panel Mount Tab	93.001.5	PMA/KU

ENCLOSURE DRAWING (To convert to inches divide by 25.4.)

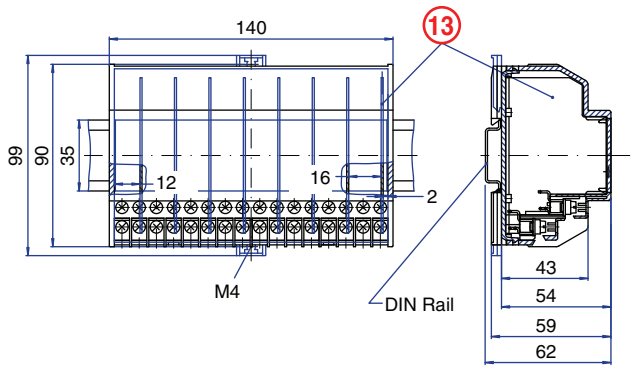

PCB DRAWING (To convert to inches divide by 25.4.)

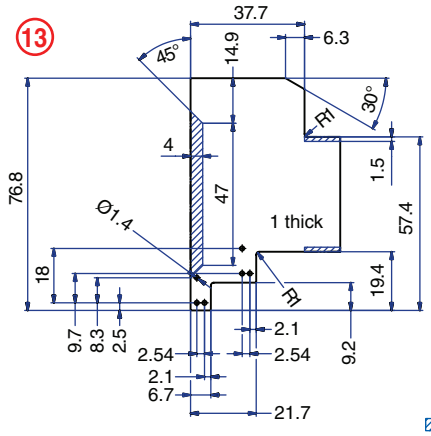

unused space

32 Terminal

Horizontal PCB
Screw Clamp
terminals on one side only

TECHNICAL INFORMATION

Electrical:
16A, 300V, 22-14 AWG
Housing Material:
Glass-filled Polycarbonate
Temperature Range:
Up to 125°C (257°F)
Flammability Rating:
UL94 V-O
Color:
Light Gray

Terminal Type:
Screw / Pressure Plate
Terminal Screw Size:
M3.5
Recommended Torque:
0.8Nm
Max. PCB's:
(1) Horizontal, (2) Vertical
Mounting:
35mm DIN Rail or optional panel mounting*

ORDERING INFORMATION

Part Number	Type	Description	PCB Connection
91.300	KU4011C	Straight Pins	Machine Solder

ACCESSORIES

Accessories	Part Number	Type
1 Meter DIN Rail	2511120/1M	TS35x7.5/1M
Screw-hole and Wire-Entry Cover Plug Set	91.201.1	SHPC
*Panel Mount Tab	93.001.5	PMA/KU

ENCLOSURE DRAWING (To convert to inches divide by 25.4.)

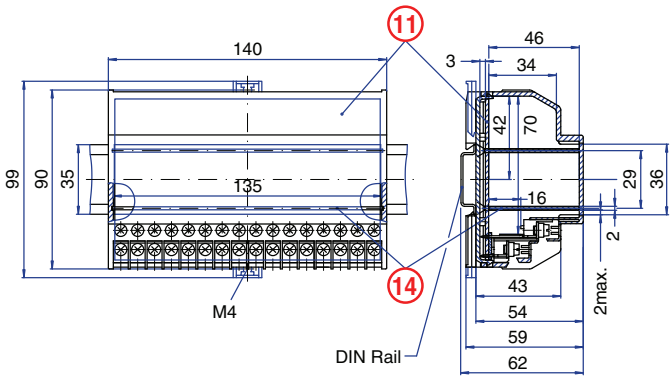

PCB DRAWING (To convert to inches divide by 25.4.)

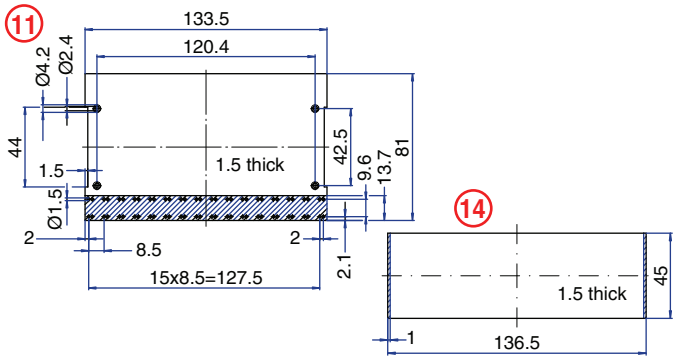

unused space

32 Terminal

Vertical PCB
Screw Clamp
terminals in corners only

TECHNICAL INFORMATION

Electrical:
16A, 300V, 22-14 AWG

Housing Material:
Glass-filled Polycarbonate

Temperature Range:
Up to 125°C (257°F)

Flammability Rating:
UL94 V-O

Color:
Light Gray

Terminal Type:
Screw / Pressure Plate

Terminal Screw Size:
M3.5

Recommended Torque:
0.8Nm

Max. PCB's:
(4) Vertical

Mounting:
35mm DIN Rail or
optional panel mounting*

ORDERING INFORMATION

Part Number	Type	Description	PCB Connection
91.360	KU4012B	Right Angle Pins	Machine Solder/ Wire Jumper

ACCESSORIES

Accessories	Part Number	Type
1 Meter DIN Rail	2511120/1M	TS35x7.5/1M
Screw-hole and Wire-Entry Cover Plug Set	91.201.1	SHPC
*Panel Mount Tab	93.001.5	PMA/KU

ENCLOSURE DRAWING (To convert to inches divide by 25.4.)

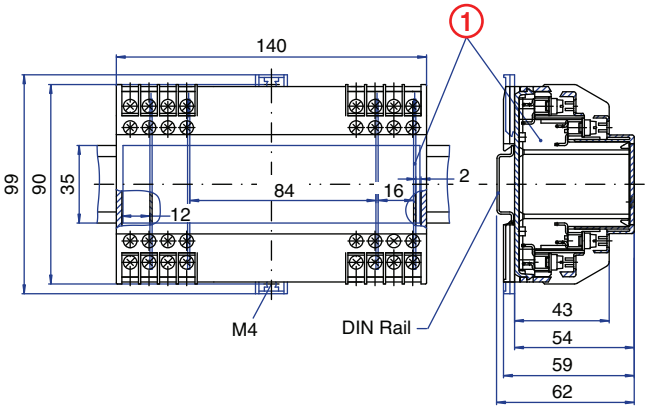

PCB DRAWING (To convert to inches divide by 25.4.)

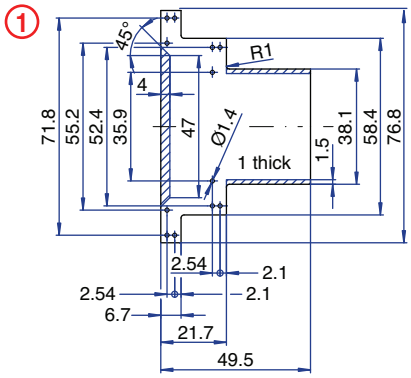

unused space

32 Terminal

Horizontal PCB
Screw Clamp
terminals in corners only

TECHNICAL INFORMATION

Electrical:
16A, 300V, 22-14 AWG

Housing Material:
Glass-filled Polycarbonate

Temperature Range:
Up to 125°C (257°F)

Flammability Rating:
UL94 V-O

Color:
Light Gray

Terminal Type:
Screw / Pressure Plate

Terminal Screw Size:
M3.5

Recommended Torque:
0.8Nm

Max. PCB's:
(1) Horizontal, (2) Vertical

Mounting:
35mm DIN Rail or
optional panel mounting*

ORDERING INFORMATION

Part Number	Type	Description	PCB Connection
91.340	KU4012C	Straight Pins	Machine Solder

ACCESSORIES

Accessories	Part Number	Type
1 Meter DIN Rail	2511120/1M	TS35x7.5/1M
Screw-hole and Wire-Entry Cover Plug Set	91.201.1	SHPC
*Panel Mount Tab	93.001.5	PMA/KU

ENCLOSURE DRAWING (To convert to inches divide by 25.4.)

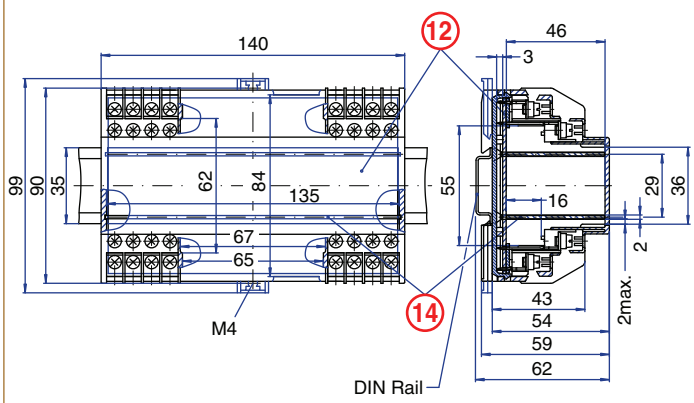

PCB DRAWING (To convert to inches divide by 25.4.)

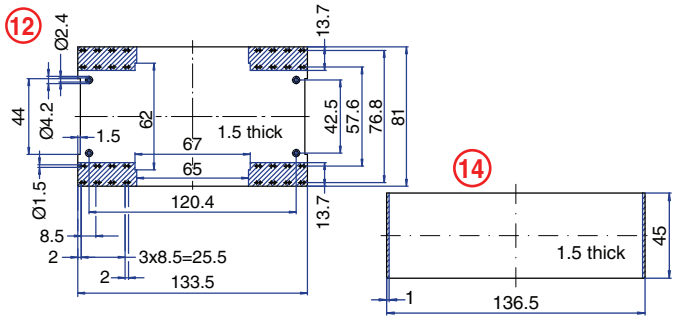

unused space

32 Terminal

Vertical PCB
Screw Clamp
with vent slots

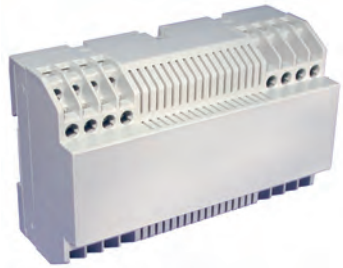

TECHNICAL INFORMATION

Electrical:
16A, 300V, 22-14 AWG

Housing Material:
Glass-filled Polycarbonate

Temperature Range:
Up to 125°C (257°F)

Flammability Rating:
UL94 V-O

Color:
Light Gray

Terminal Type:
Screw / Pressure Plate

Terminal Screw Size:
M3.5

Recommended Torque:
0.8Nm

Max. PCB's:
(1) Vertical

Mounting:
35mm DIN Rail or
optional panel mounting*

ORDERING INFORMATION

Part Number	Type	Description	PCB Connection
91.365	KU4012BV	Right Angle Pins	Machine Solder/ Wire Jumper

ACCESSORIES

Accessories	Part Number	Type
1 Meter DIN Rail	2511120/1M	TS35x7.5/1M
Screw-hole and Wire-Entry Cover Plug Set	91.201.1	SHPC
*Panel Mount Tab	93.001.5	PMA/KU

ENCLOSURE DRAWING (To convert to inches divide by 25.4.)

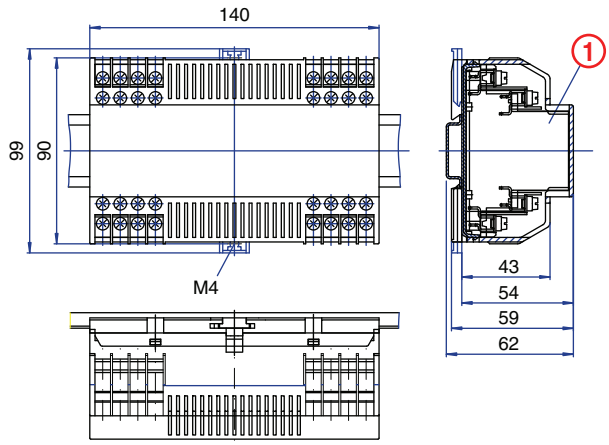

PCB DRAWING (To convert to inches divide by 25.4.)

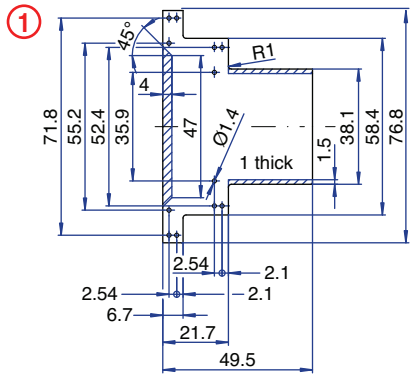

unused space

32 Terminal

Horizontal PCB
Screw Clamp
with vent slots

TECHNICAL INFORMATION

Electrical:
16A, 300V, 22-14 AWG

Housing Material:
Glass-filled Polycarbonate

Temperature Range:
Up to 125°C (257°F)

Flammability Rating:
UL94 V-O

Color:
Light Gray

Terminal Type:
Screw / Pressure Plate

Terminal Screw Size:
M3.5

Recommended Torque:
0.8Nm

Max. PCB's:
(1) Horizontal

Mounting:
35mm DIN Rail or
optional panel mounting*

ORDERING INFORMATION

Part Number	Type	Description	PCB Connection
91.345	KU4012CV	Straight Pins	Machine Solder

ACCESSORIES

Accessories	Part Number	Type
1 Meter DIN Rail	2511120/1M	TS35x7.5/1M
Screw-hole and Wire-Entry Cover Plug Set	91.201.1	SHPC
*Panel Mount Tab	93.001.5	PMA/KU

ENCLOSURE DRAWING (To convert to inches divide by 25.4.)

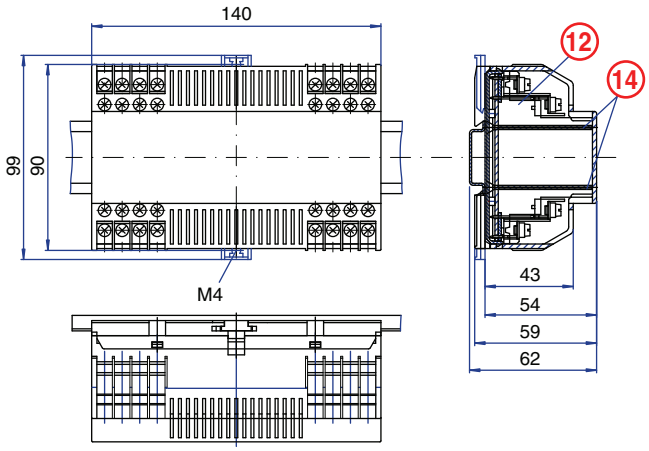

PCB DRAWING (To convert to inches divide by 25.4.)

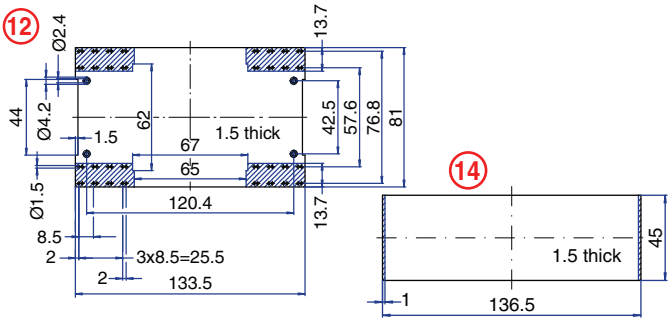

unused space

64 Terminal

Vertical PCB Screw Clamp

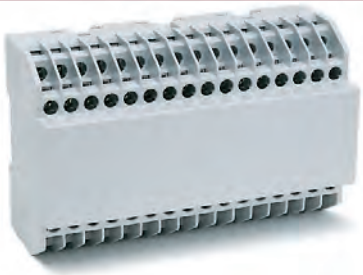

TECHNICAL INFORMATION

Electrical:
16A, 300V, 22-14 AWG

Housing Material:
Glass-filled Polycarbonate

Temperature Range:
Up to 125°C (257°F)

Flammability Rating:
UL94 V-O

Color:
Light Gray

Terminal Type:
Screw / Pressure Plate

Terminal Screw Size:
M3.5

Recommended Torque:
0.8Nm

Max. PCB's:
(8) Vertical

Mounting:
35mm DIN Rail or optional panel mounting*

ORDERING INFORMATION

Part Number	Type	Description	PCB Connection
91.400	KU4013B	Right Angle Pins	Machine Solder/ Wire Jumper

ACCESSORIES

Accessories	Part Number	Type
1 Meter DIN Rail	2511120/1M	TS35x7.5/1M
Screw-hole and Wire-Entry Cover Plug Set	91.201.1	SHPC
*Panel Mount Tab	93.001.5	PMA/KU

ENCLOSURE DRAWING (To convert to inches divide by 25.4.)

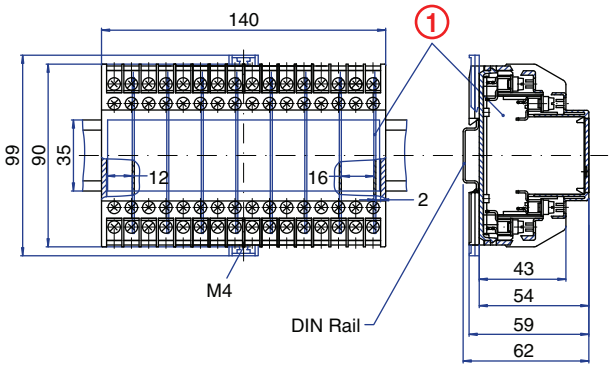

PCB DRAWING (To convert to inches divide by 25.4.)

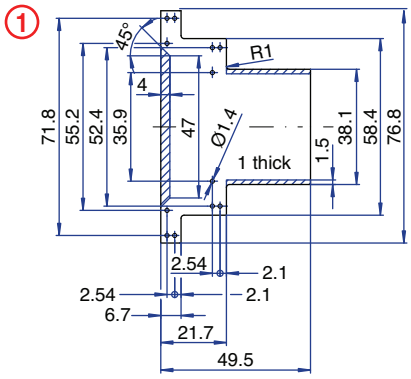

unused space

64 Terminal

Horizontal PCB Screw Clamp

TECHNICAL INFORMATION

Electrical:
16A, 300V, 22-14 AWG

Housing Material:
Glass-filled Polycarbonate

Temperature Range:
Up to 125°C (257°F)

Flammability Rating:
UL94 V-O

Color:
Light Gray

Terminal Type:
Screw / Pressure Plate

Terminal Screw Size:
M3.5

Recommended Torque:
0.8Nm

Max. PCB's:
(1) Horizontal, (2) Vertical

Mounting:
35mm DIN Rail or optional panel mounting*

ORDERING INFORMATION

Part Number	Type	Description	PCB Connection
91.380	KU4013C	Straight Pins	Machine Solder

ACCESSORIES

Accessories	Part Number	Type
1 Meter DIN Rail	2511120/1M	TS35x7.5/1M
Screw-hole and Wire-Entry Cover Plug Set	91.201.1	SHPC
*Panel Mount Tab	93.001.5	PMA/KU

ENCLOSURE DRAWING (To convert to inches divide by 25.4.)

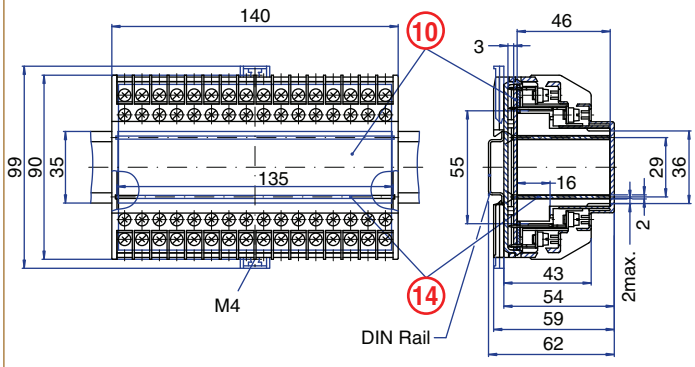

PCB DRAWING (To convert to inches divide by 25.4.)

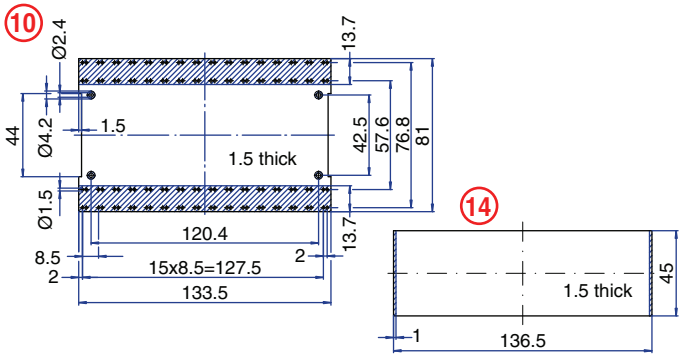

unused space

64 Terminal

Vertical PCB
Spring Clamp

TECHNICAL INFORMATION

Electrical:
10A, 300V, 26-14 AWG

Housing Material:
Glass-filled Polycarbonate

Temperature Range:
Up to 125°C (257°F)

Flammability Rating:
UL94 V-O

Color:
Light Gray

Terminal Type:
Spring Cage Clamp

Terminal Screw Size:
–

Recommended Torque:
–

Max. PCB's:
(8) Vertical

Mounting:
35mm DIN Rail or optional panel mounting*

ORDERING INFORMATION

Part Number	Type	Description	PCB Connection
91.600	KU4041B	Right Angle Pins	Machine Solder/ Wire Jumper

ACCESSORIES

Accessories	Part Number	Type
1 Meter DIN Rail	2511120/1M	TS35x7.5/1M
*Panel Mount Tab	93.001.5	PMA/KU

ENCLOSURE DRAWING (To convert to inches divide by 25.4.)

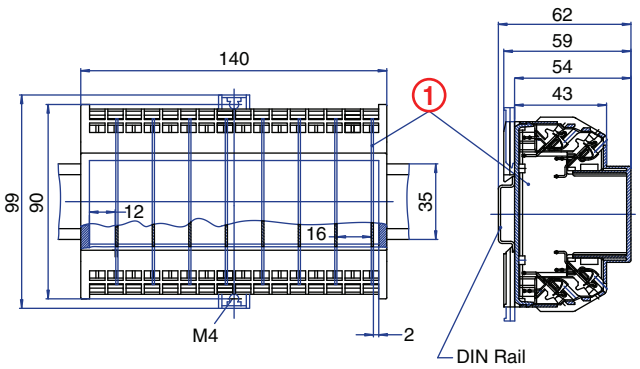

PCB DRAWING (To convert to inches divide by 25.4.)

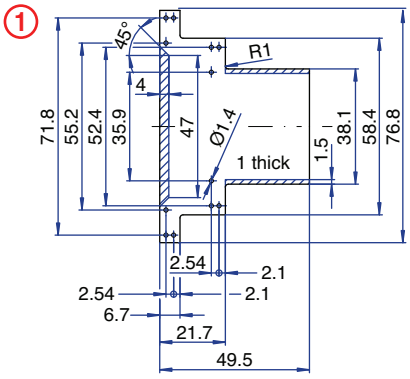

unused space

64 Terminal

Horizontal PCB
Spring Clamp

TECHNICAL INFORMATION

Electrical:
10A, 300V, 26-14 AWG

Housing Material:
Glass-filled Polycarbonate

Temperature Range:
Up to 125°C (257°F)

Flammability Rating:
UL94 V-O

Color:
Light Gray

Terminal Type:
Spring Cage Clamp

Terminal Screw Size:
–

Recommended Torque:
–

Max. PCB's:
(1) Horizontal

Mounting:
35mm DIN Rail or optional panel mounting*

ORDERING INFORMATION

Part Number	Type	Description	PCB Connection
91.610	KU4041C	Straight Pins	Machine Solder

ACCESSORIES

Accessories	Part Number	Type
1 Meter DIN Rail	2511120/1M	TS35x7.5/1M
*Panel Mount Tab	93.001.5	PMA/KU

ENCLOSURE DRAWING (To convert to inches divide by 25.4.)

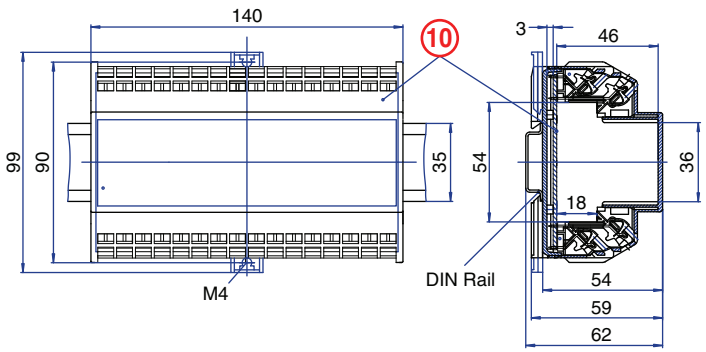

PCB DRAWING (To convert to inches divide by 25.4.)

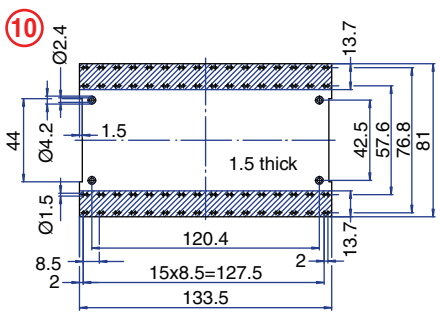

unused space