THIS DRAWING IS UNPUBLISHED. RELEASED FOR PUBLICATION 20
© COPYRIGHT 20 BY - ALL RIGHTS RESERVED.

LOC	DIST
FT	0

REVISIONS

P	LTR	DESCRIPTION	DATE	DWN	APVD
	B4	REVISED PER ECO-11-005027	15MAR2011	RK	HMR
	C	PACKAGING CHANGE FROM BOX TO TRAY	08SEP2017	FP	FP

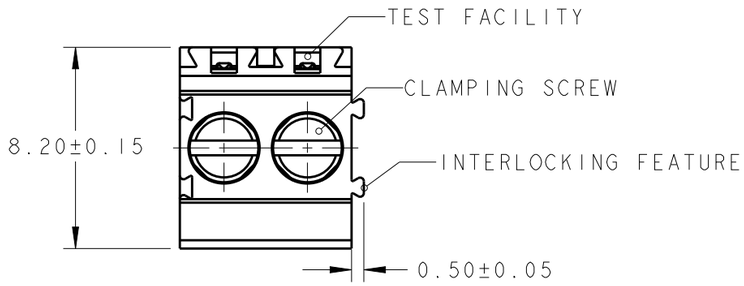

1. MATERIALS AND FINISH
   HOUSING : PA 6.6, UL 94-V0, COLOR GREEN.
   CLAMP : BRASS, NICKEL PLATED
   TERMINAL : BRASS, TIN PLATED
   CLAMPING SCREW : M3, BRASS, NICKEL PLATED
2. SUITABLE FOR 1.6-2.4 mm. PC BOARD THICKNESS.
3. END-TO-END STACKABLE W/INTERLOCK WITHOUT LOSS OF CENTERLINE SPACING
4. WIRE SIZE RANGE: 14 - 30 AWG
5. NOT CUMULATIVE TOLERANCE
6. CAGE CLAMPS TO BE IN THE CLOSED POSITION.

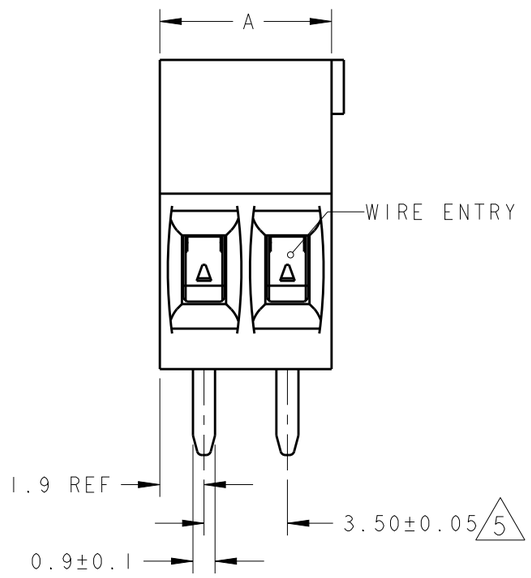

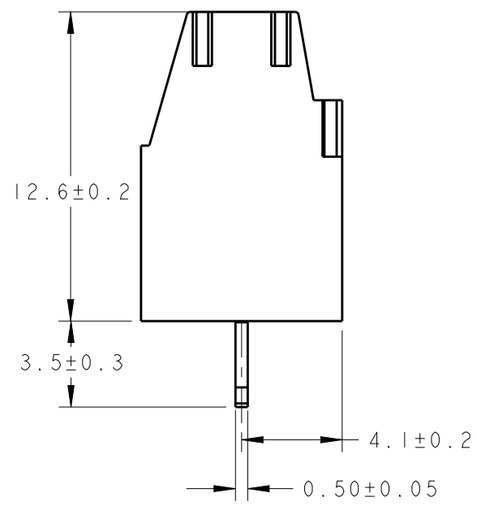

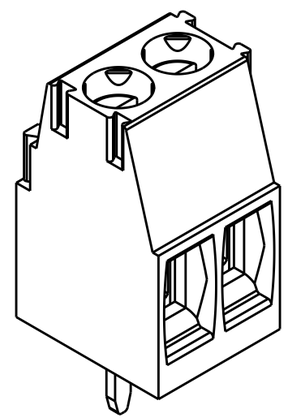

284391-2 AS SHOWN

DIM "A"	NO OF POS.	PART NUMBER
14.0	4	2-284391-8
10.5	3	2-284391-7
7.0	2	2-284391-6
87.5	25	2-284391-5
84.0	24	2-284391-4
80.5	23	2-284391-3
77.0	22	2-284391-2
73.5	21	2-284391-1
70.0	20	2-284391-0
66.5	19	1-284391-9
63.0	18	1-284391-8
59.5	17	1-284391-7
56.0	16	1-284391-6
52.5	15	1-284391-5
49.0	14	1-284391-4
45.5	13	1-284391-3
42.0	12	1-284391-2
38.5	11	1-284391-1
35.0	10	1-284391-0
31.5	9	284391-9
28.0	8	284391-8
24.5	7	284391-7
21.0	6	284391-6
17.5	5	284391-5
14.0	4	284391-4
10.5	3	284391-3
7.0	2	284391-2

RECOMMENDED PC BOARD LAYOUT

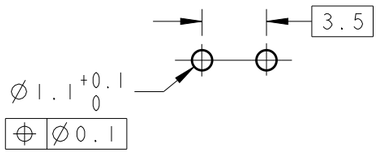

THIS DRAWING IS A CONTROLLED DOCUMENT.

DIMENSIONS: mm

TOLERANCES UNLESS OTHERWISE SPECIFIED:
0 PLC ±-
1 PLC ±.3
2 PLC ±.25
3 PLC ±-
4 PLC ±-
ANGLES ±2

MATERIAL 1 -
FINISH 1 -

DWN 01FEB2002 E. ZANOLINI
CHK 01FEB2002 E. ZANOLINI
APVD 01FEB2002 D. BIEVENOUR
PRODUCT SPEC 108-20166
APPLICATION SPEC 114-20079
WEIGHT -

CUSTOMER DRAWING

TE Connectivity

NAME TERMINAL BLOCK PCB, MOUNT STRAIGHT SIDE WIRE ENTRY, STACKING W/ INTERLOCK, 3.5mm PITCH

SIZE	CAGE CODE	DRAWING NO	RESTRICTED TO
A3	00779	C-284391	-

SCALE 4:1 SHEET 1 OF 1 REV C

1470-19 (3/11)