THIS DRAWING IS UNPUBLISHED. RELEASED FOR PUBLICATION –,– .
© COPYRIGHT – By – ALL RIGHTS RESERVED.

REVISIONS

P	LTR	DESCRIPTION	DATE	DWN	APVD
	G	REV PER 0G3A–0031–04	29JAN04	–	JR
	G1	REVISED PER ECO–17–003799	20MAR2017	BDA	DR

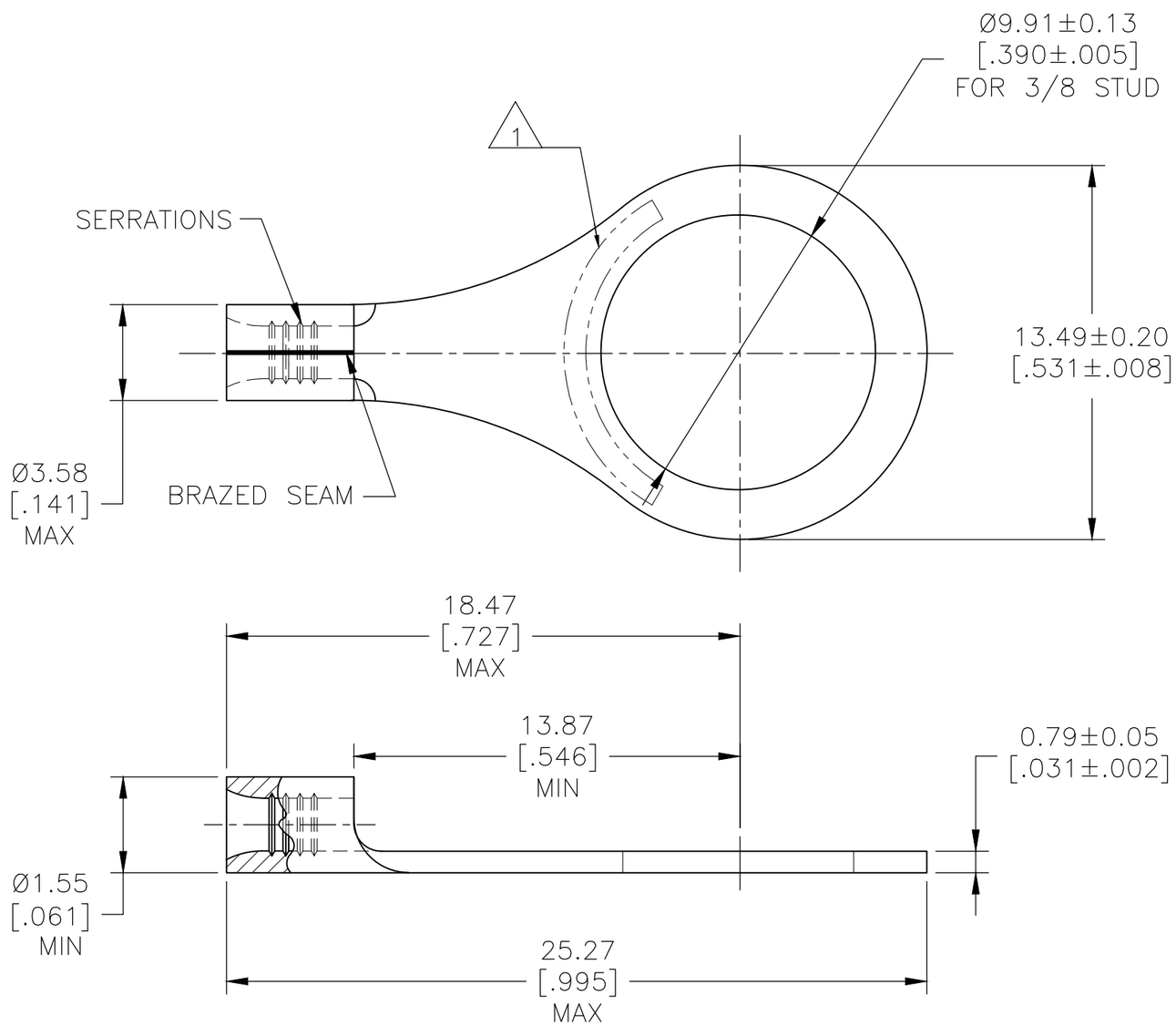

AMP WIRE RANGE	E13288 Listed
22–16 AWG SOLID OR STRANDED	22–16 AWG SOLID OR STRANDED

LR7189 Certified	MILITARY P/N AND CLASS
22–16 AWG SOLID OR STRANDED	M7928/7–6 CLASS 2 P/N 34115 & 2–34115–2 ONLY

1. STAMP AMP 22–18* APPROX AS SHOWN 22–16 TERMINALS ARE STAMPED 22–18 IN ACCORDANCE WITH MILITARY SPECIFICATION SAE AS7928 COMMERCIAL WIRE RANGE IS 22–16
2. TIN PLATE 0.00254[.000100] MIN THK PER ASTM B–545
3. NICKEL PLATE 0.00762[.000300] MIN THK PER SAE AMS QQ–N–290
4. P/N 34115–1 IS NOT UL OR CSA APPROVED

FINISH	QTY.	PACKAGE TYPE	PART NUMBER
3	1000	LOOSE PIECE	4 34115–1
2	100	LOOSE PIECE, BOX	8–34115–1
2	5000	ON TAPE	2–34115–2
2	1000	LOOSE PIECE	34115

AMP INCORPORATED
CUSTOMER SERVICE SYSTEMS

FOR ADDITIONAL PRODUCT INFORMATION OR COPIES OF DRAWINGS AND TECHNICAL DOCUMENTS	PRODUCT INFORMATION CENTER 1–800–522–6752	MAX RECOMMENDED OPERATING TEMPERATURE: 170°C [338°F] MAX
FOR APPLICATION TOOLING INFORMATION	TOOLING ASSISTANCE CENTER 1–800–722–1111	VOLTAGE RATING: NOT APPLICABLE
FOR ORDER ENTRY	1–800–526–5142	WIRE CROSS SECTIONAL AREA RANGE, 0.26–1.65mm²[509–3,260] CIR MILS SOLID OR STRANDED

THIS DRAWING IS A CONTROLLED DOCUMENT.

DIMENSIONS: mm [INCHES]

TOLERANCES UNLESS OTHERWISE SPECIFIED:
0 PLC ±–
1 PLC ±–
2 PLC ±–
3 PLC ±–
4 PLC ±–
ANGLES ±–

MATERIAL: COPPER PER ASTM B–152 ANNEALED

FINISH: SEE TABLE

DWN TA BRINKMAN 3–10–93
CHK DA PATTERSON 3–10–93
APVD DE MILLER 3–10–93
PRODUCT SPEC —
APPLICATION SPEC —
WEIGHT —

TE Connectivity

NAME: TERMINAL, RING TONGUE, SOLISTRAND 22–16 AWG

SIZE	CAGE CODE	DRAWING NO	RESTRICTED TO
A3	00779	C–34115	—

CUSTOMER DRAWING | SCALE 8:1 | SHEET 1 OF 1 | REV G1

1470–19 (1/15)