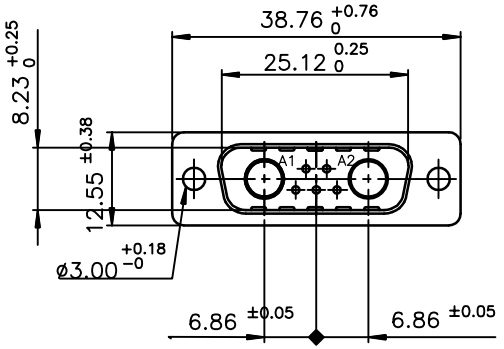

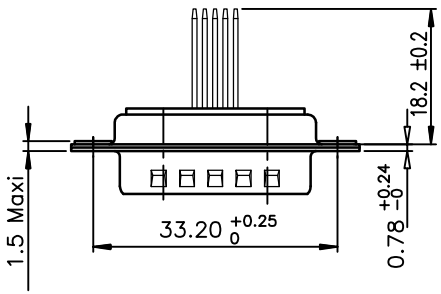

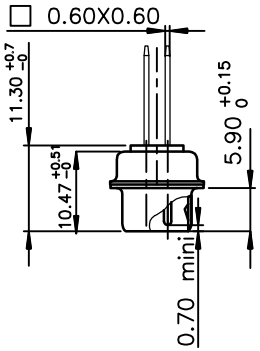

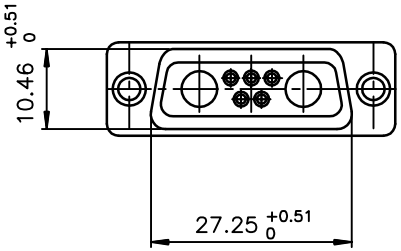

DA7W2P443A00LF
DA7W2P400A00LF
PART NUMBER

LAYOUT DIMENSIONS (after plating)

CONNECTOR SIDE VIEW

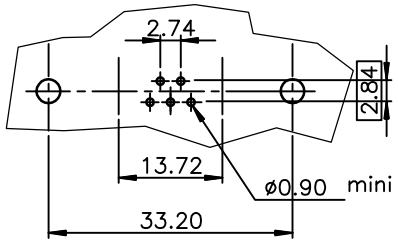

GENERAL CHARACTERISTICS AND ROHS INFORMATIONS:
SEE DRAWING C01-8639-0000

European Views

www.fciconnect.com			surface ISO 1302		tolerance std ISO 406 ISO 1101	projection	mm
			TOLERANCES UNLESS OTHERWISE SPECIFIED				
Dr	PESSON	2005/11/24	ANGULAR	LINEAR	0.X ±0.1	size A3	Scale 1:1
Eng	PESSON	2005/11/24			0.XX ±0.1		
Chr	LEGARE	2005/11/24	0.XX° ±2°		0.XXX ±0.1	ECN	F11-0062
Appr	LEGARE	2005/11/24	Product family		D-SUB	Spec ref	-
title	PIN CONNECTOR WITH WIRE WRAP					dwg no	C01-8639-2246
						Rev.	C
catalog no			-			CUSTOMER	sheet 1 of 1

rev	ecn no	dr	date
A	LS05-0106	MPE	2005/11/24
B	LS06-0095	LGO	2006/06/15
C	F11-0062	APA	2011/05/18
-	-	-	-
-	-	-	-
-	-	-	-
-	-	-	-

REV F – 2006-04-17

Copyright FCI.