THIS COPY IS PROVIDED ON A RESTRICTED BASIS AND IS NOT TO BE USED IN ANY WAY DETRIMENTAL TO THE INTERESTS OF PANDUIT CORP.

A

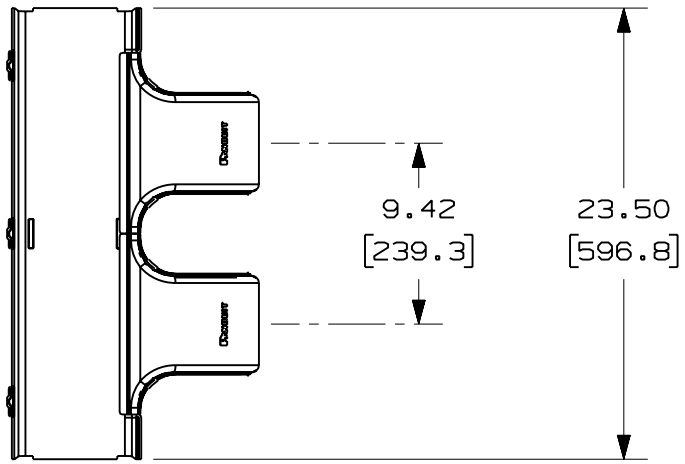

PANDUIT PART NUMBER	WEIGHT
FRDDS6X4	3.25 LB/EACH (1474g/EACH)

E

D NOTES:

1. SEE CURRENT CATALOG FOR ADDITIONAL PART SUFFIXES TO INDICATE COLOR AND/OR PACKAGE QUANTITY.
2. THE FIBERRUNNER 6x4 DUAL DOWNSPOUT WITH 4x4 EXITS IS DESIGNED WITH A MINIMUM 2" (50.8) BEND RADIUS TO PROTECT FIBER OPTIC CABLES.
3. THE FIBERRUNNER 6x4 DUAL DOWNSPOUT WITH 4x4 EXITS INCLUDES:
   ONE (1) DUAL DOWNSPOUT BASE,
   TWO (2) THROAT COVERS.
4. DIMENSIONS IN PARENTHESES ARE IN METRIC.

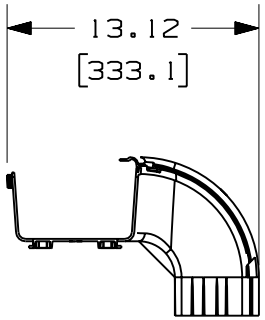

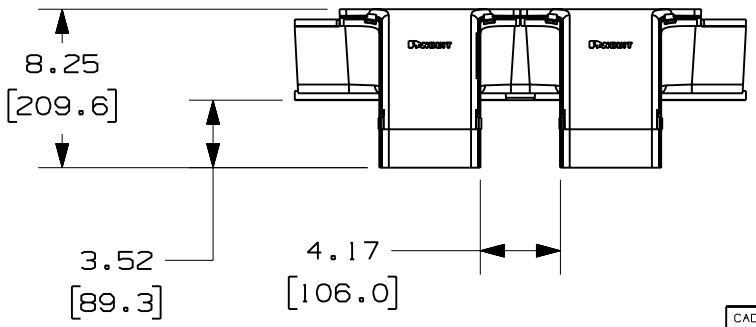

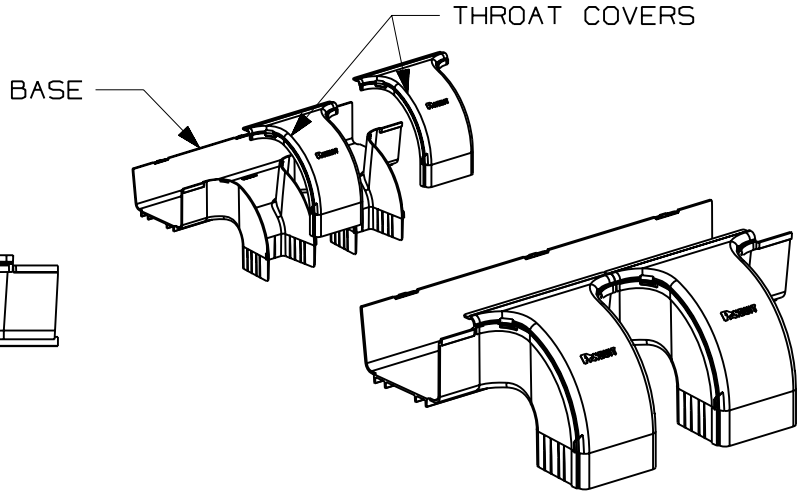

ENG. REF.: D38394BH_DC_FRDDS6X4_01.prt

CAD FILENAME/LAYERS C FRDDS6X4.pdf

PANDUIT CORP TINLEY PARK, ILLINOIS

FIBERRUNNER 6x4 DUAL DOWNSPOUT WITH 4x4 EXITS (FRDDS6X4)
B CUSTOMER DRAWING

UNLESS OTHERWISE SPECIFIED, DIMENSIONAL TOLERANCES ARE:
(.X) ± (.XXX) ±
(.XX) ±.03 (.8) ANGLES ±

UNLESS OTHERWISE SPECIFIED, ALL DIMENSIONS ARE GIVEN IN INCHES, THIRD ANGLE PROJECTION.

DRAWN BY: MSO
MAT'L: ABS
SCALE: NONE
DATE: 12-4-02
CHK'D: DJWA
DRAWING NO.: 38394-05
DWG SIZE: A

REV	DATE	BY	CHK	DESCRIPTION	ECN	R	CUST	SUP	GMBH
-	--------	---	---	E. REVISED PART WEIGHT	--------	--	--		
-	--------	---	---	D. REVISED GENERAL NOTES C. REVISED CAD FILENAME	--------	--	--		
1	7-6-06	DTP	RN	B. REVISED DRAWING TITLE A. REVISED AND REDRAWN	38394-05	RN	RN		