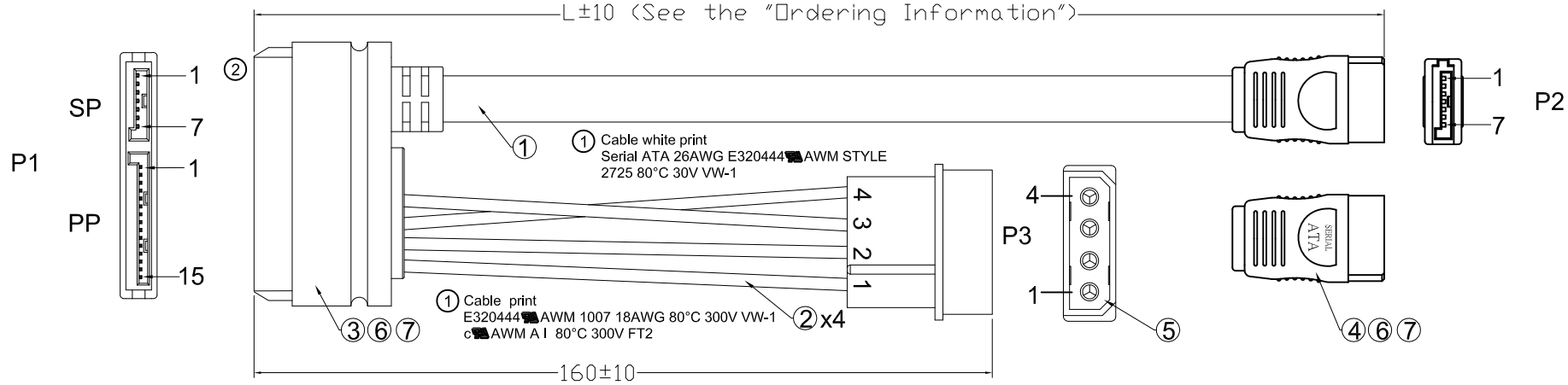

① PE Bag Packing

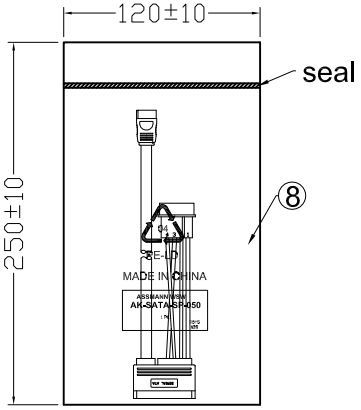

1PC/PE Bag

PIN ASSIGNMENT

P1(PP)		P3
01+02+03		NC
13+14+15	Yellow	1
10+11+12	Black	2
04+05+06	Black	3
07+08+09	Red	4

P1(SP)		P2
1	GND	1
2		2
3		3
4	GND	4
5		5
6		6
7	GND	7

Electrical test:
1. Hi-Pot test: DC300V/10ms
2. Conduct resistance: 2Ω max.
3. Insulator resistance: 5MΩ min.
4. 100% open, short, miswire test

Ordering Information:

② AK-SATA-SP-xxx
- 050 : L= 500mm
- 075 : L= 750mm
- 100 : L= 1000mm

NO.	NAME.	Q'TY	SPECIFICATION
⑧	PE bag	1	Clear Print black "MADE IN CHINA"+ "1PC"
⑦	Innermold	N/A	White PE
⑥	Overmold	N/A	Black PVC 45P
⑤	P3 Conn.	1	Big 4P Female/housing PH=5.08mm White Tin plate(with 4pcs terminal)
④	P2 Conn.	1	SATA 7P/F Crimp type terminal:15u" Insulator: Black PBT
③	P1 Conn.	1	SATA 7/F+15P/F Crimp type terminal:15u" Insulator: Black PBT
②	Cable	1	UL1007 18AWG(34/0.18TC) OD: 2.0mm Jacket:black*2/Yellow/Red
①	Cable	1	UL2725(26AWG(1/0.404)*2+D(1/0.32)*2+AL)*2F OD:2.2x7.8 Jacket: Red

RoHS compliant
Unit: mm

Scale	Free
TOLERANCE	
X.	±1
X.X	±0.20
DIM	TOL
Angle	TOL

Id.	Modification	Date	Name
②	Change Module shape and add length type	19.07.2017	Fred
①	Update the drawing	18.08.2014	Amy
⓪	Drawn	26.08.2014	Joanna

	Date	Name
Drawn	26.08.2014	Joanna
Approved	19.07.2017	Fred

ASSMANN WSW components

Customer-No.

ASSMANN WSW-No. AK-SATA-SP-xxx

Drawing-No. ASS 7213 CA

rev02

Replace

Sheet

CKK0013