THIS DRAWING IS UNPUBLISHED. RELEASED FOR PUBLICATION -.-. -
© COPYRIGHT - BY TYCO ELECTRONICS CORPORATION. ALL RIGHTS RESERVED.

LOC	DIST
GP	00

REVISIONS

P	LTR	DESCRIPTION	DATE	DWN	APVD
	A1	REVISED PER ECO-06-17702	16AUG06	JRP	SS

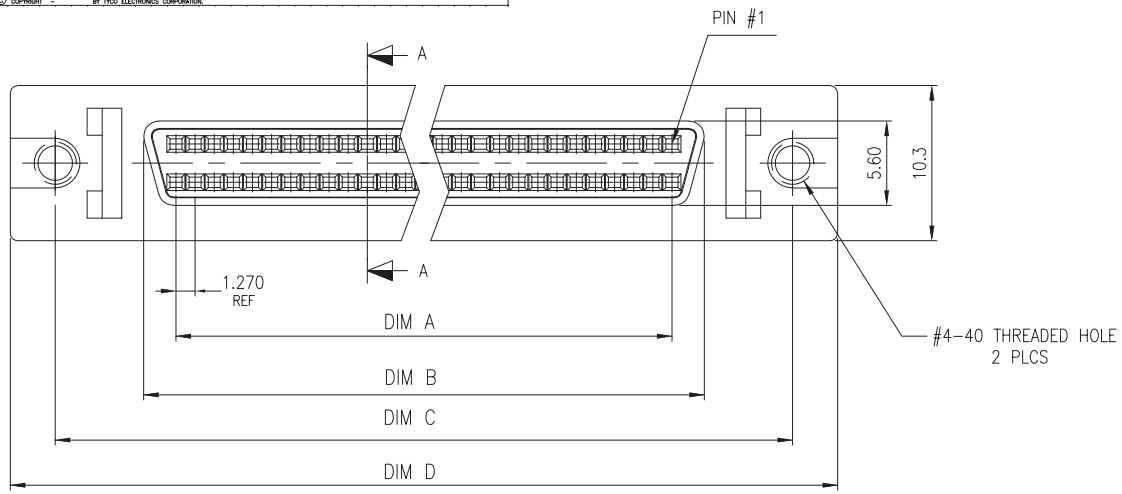

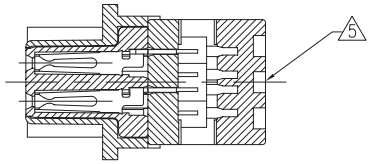

SEC. A-A

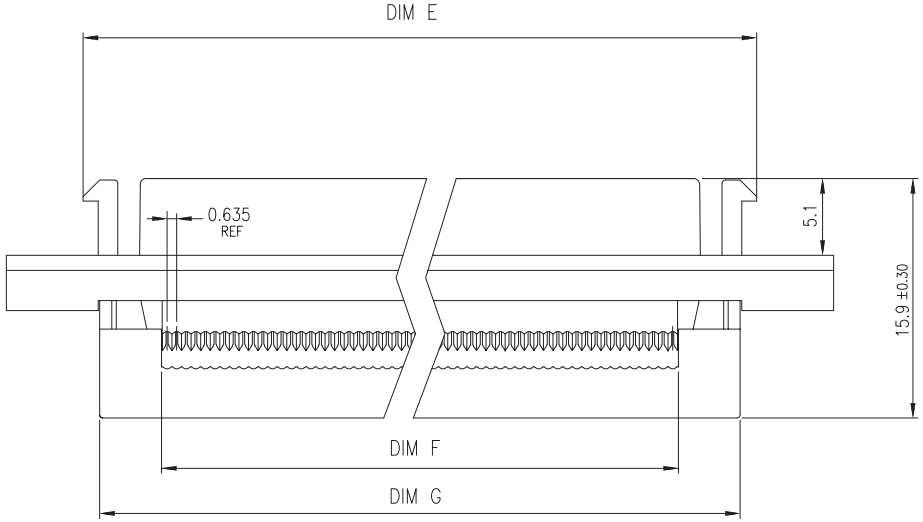

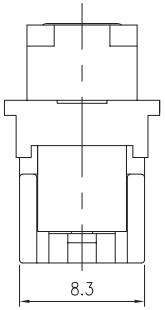

1. HOUSING: PBT, 30% GLASS REINFORCED, UL94V-0, COLOR BLACK.
   CONTACTS: PHOS. BRONZE.
   BRACKET: ZINC ALLOY.
2. CONTACTS: GOLD PLATED (SEE TABLE) ON MATING END, 1.27um [.000050in] MIN MATTE TIN ON TERMINATION AREA, ALL OVER 1.27um [.000050in] MIN NICKEL ON ENTIRE CONTACT.
   BRACKET: 1.27um [.000050] MIN. NICKEL.
3. SPECIFICATIONS:
   CURRENT RATING: 1A.
   VOLTAGE RATING: 30V AC.
   INSULATION RESISTANCE: 1000 MILLIOHMS MIN. AT 500V DC.
   CONTACT RESISTANCE: 55 MILLIOHMS MAX.
   DIELECTRIC WITHSTANDING VOLTAGE: 250V AC FOR 1 MINUTE.
   CONTACT RETENTION FORCE: 600 gf MIN.
   TOTAL INSERTION FORCE: 4 Kgf MAX. (FORCE DEPENDENT ON MATING CONNECTOR)
   TOTAL WITHDRAWAL FORCE: 1.5 Kgf MAX. (FORCE DEPENDENT ON MATING CONNECTOR)
   WIRE COVER RETENTION FORCE: 6 Kgf MIN.
   OPERATION TEMPERATURE: -55°C TO 85°C.
4. FOR USE WITH 30 & 32 AWG FLAT RIBBON CABLE.
   SELECTION OF COMPATIBLE RIBBON CABLE AND APPLICATION TOOLING FOR USE WITH THIS PRODUCT IS THE RESPONSIBILITY OF THE USER.
5. TYCO LOGO LOCATED ON THIS SURFACE.
6. SPECIFICATIONS SUBJECT TO CHANGE WITHOUT NOTICE.
   CONTACT TYCO ELECTRONICS FOR THE LATEST SPECIFICATIONS.
7. PACKAGED IN TRAYS.

DIM G	DIM F	DIM E	DIM D	DIM C	DIM B	DIM A	CONTACT FINISH	NO OF POS	PART NUMBER
51.5	43.30	53.70	63.90	57.93	46.20	41.91	0.03µm [.000001in]	68	2-5390399-7
40.07	31.87	42.27	52.47	46.50	34.77	30.48	0.03µm [.000001in]	50	2-5390399-5
51.5	43.30	53.70	63.90	57.93	46.20	41.91	0.38µm [.000015in]	68	1-5390399-7
40.07	31.87	42.27	52.47	46.50	34.77	30.48	0.38µm [.000015in]	50	1-5390399-5
51.5	43.30	53.70	63.90	57.93	46.20	41.91	0.76µm [.000030in]	68	5390399-7
40.07	31.87	42.27	52.47	46.50	34.77	30.48	0.76µm [.000030in]	50	5390399-5

THIS DRAWING IS A CONTROLLED DOCUMENT.

DIMENSIONS: mm

TOLERANCES UNLESS OTHERWISE SPECIFIED:
0 PLC ± -
1 PLC ± 0.15
2 PLC ± 0.10
3 PLC ± -
4 PLC ± -
ANGLES ± -

MATERIAL 1
FINISH 2

DWN J.GERACE 26JAN05
CHK S.SHUEY 26JAN05
APVD M.WALMSLEY 26JAN05
PRODUCT SPEC — 3
APPLICATION SPEC — 4
WEIGHT —

Tyco Electronics Corporation
Harrisburg, Pa 17105-3608

NAME: RECEPTACLE ASSY, LATCHES, 0.64[.127] CENTERLINE, AMPLIMITE 1.27[.050] SERIES

SIZE	CAGE CODE	DRAWING NO	RESTRICTED TO
A1	00779	C-5390399	—

CUSTOMER DRAWING

SCALE 1:1 SHEET 1 OF 1 REV A1