THIS DRAWING IS UNPUBLISHED. RELEASED FOR PUBLICATION – –, .
© COPYRIGHT – BY TYCO ELECTRONICS CORPORATION. ALL RIGHTS RESERVED.

LOC	DIST
FT	0

REVISIONS

P	LTR	DESCRIPTION	DATE	DWN	APVD
	01	REVISED PER ECO-06-17641	7/24/06	SS	CR

MATERIAL:
HOUSING: POLYMIDE 6 UL94V-2.
COLOR: NATURAL (OFF WHITE).
TUBULAR CONTACT: BRASS, TIN PLATED.
SCREW: M4, STEEL, ZINC PLATED W/ NON-HEXAVALENT CHROMATE (CHROME III).
WIRE PROTECTOR: STAINLESS STEEL.

CURRENT RATING: 40A, 300V (UL).
55A, 300V (CSA).
WIRE RANGE: 8-18 AWG.

CONTINUOUS WORKING TEMPERATURE 100°C MAX.

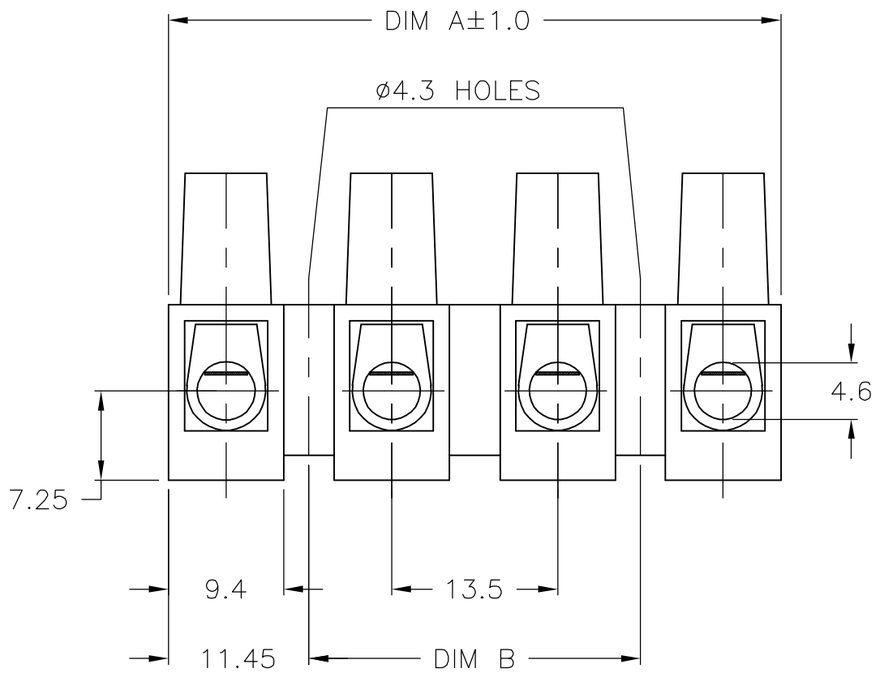

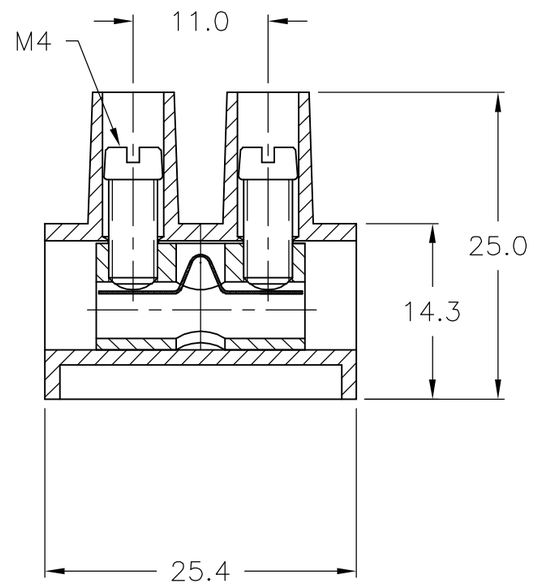

DIM B	DIM A	POSN	CATALOG NUMBER	TYCO PART NUMBER
135.0	157.9	12	TSB150012DS	1-1776311-2
121.5	144.4	11	TSB150011DS	1-1776311-1
108.0	130.9	10	TSB150010DS	1-1776311-0
94.5	117.9	9	TSB150009DS	1776311-9
81.0	103.9	8	TSB150008DS	1776311-8
67.5	90.4	7	TSB150007DS	1776311-7
54.0	76.9	6	TSB150006DS	1776311-6
40.5	63.4	5	TSB150005DS	1776311-5
27.0	49.9	4	TSB150004DS	1776311-4
13.5	36.4	3	TSB150003DS	1776311-3
–	22.9	2	TSB150002DS	1776311-2
–	9.4	1	TSB150001DS	1776311-1

THIS DRAWING IS A CONTROLLED DOCUMENT.

DIMENSIONS: mm

TOLERANCES UNLESS OTHERWISE SPECIFIED:

0 PLC	± –
1 PLC	± 0.3
2 PLC	± 0.25
3 PLC	± –
4 PLC	± –
ANGLES	± 2'

MATERIAL: –
FINISH: –

DWN S SCHLEGEL 3/21/05
CHK C RICHARD 3/21/05
APVD C RICHARD 3/21/05
PRODUCT SPEC –
APPLICATION SPEC –
WEIGHT –

CUSTOMER DRAWING

tyco Electronics
Tyco Electronics Corporation
Harrisburg, Pa 17105-3608

NAME
13.5MM PITCH W/ WIRE PROTECTOR
EUROPA TERMINAL BLOCK
–

SIZE	CAGE CODE	DRAWING NO	RESTRICTED TO
A3	00779	C-1776311	–

SCALE NTS | SHEET 1 OF 1 | REV 01