PART NAME	UTILIBOX (STYLE F)	PART No.	CU-1872-B & CU-1872-G

MATERIAL:
COVER AND BODY____MOLDED IMPACT RESISTANT ABS

FINISH:
(SUFFIX -B) COVER AND BODY_____BLACK
(SUFFIX -G) COVER AND BODY_____GRAY

FOUR (4) M2.5 x 17.5mm LG. SCREWS ARE SUPPLIED FOR ASSEMBLY.

NOTE: ALL DIMENSIONS HAVE ±0.015 TOLERANCE UNLESS OTHERWISE SPECIFIED.

MOUNTING BOSSES USE EITHER M2.5 METRIC OR #4 STD. SHEET METAL SCREWS x 0.187" LG. (NOT SUPPLIED)

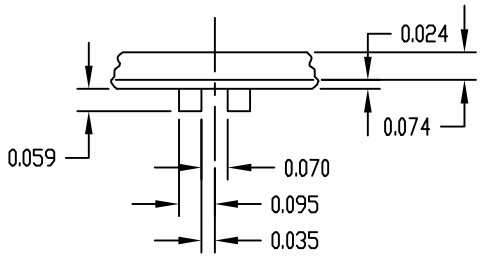

DETAIL "B"

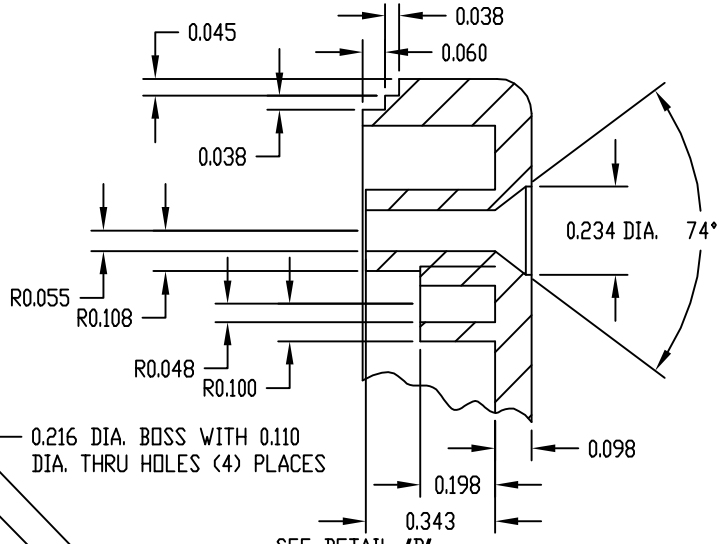

DETAIL "D"

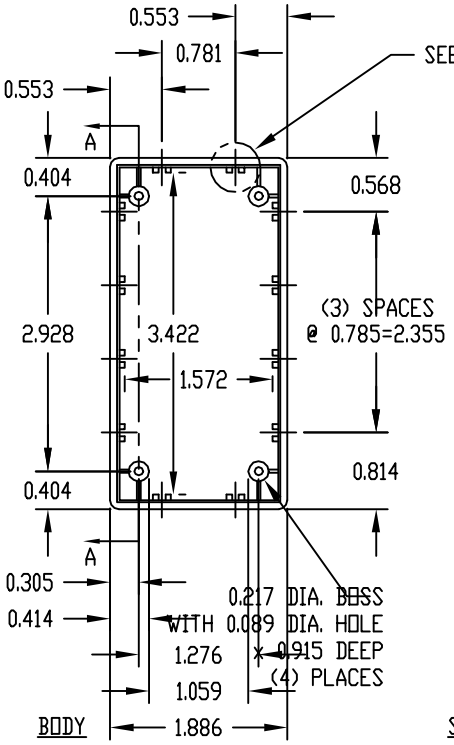

BODY

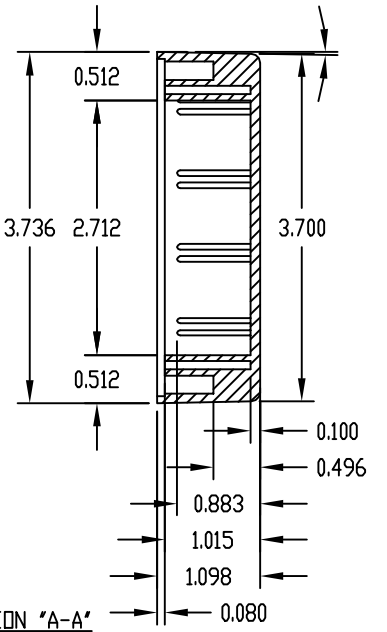

SECTION "A-A"

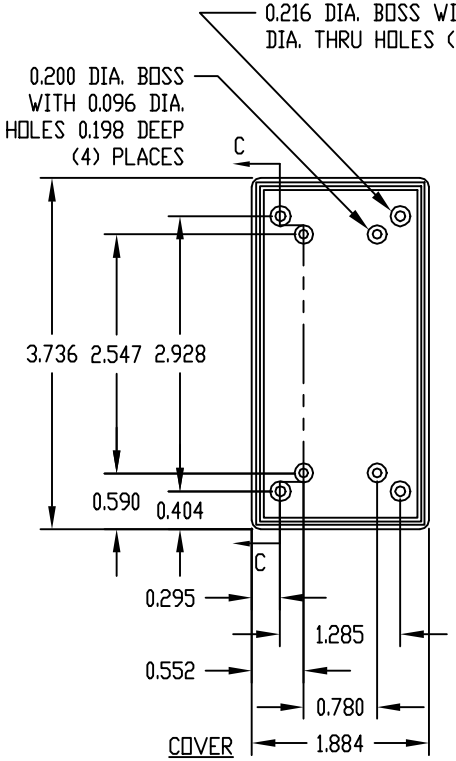

COVER

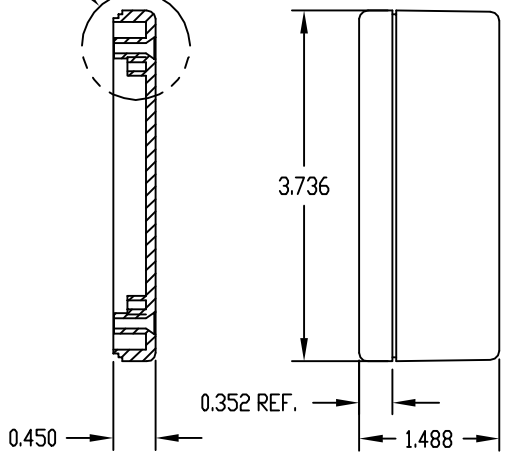

SECTION "C-C"