Adapter Plates (Z-Rail Type)

Part No.	Description
AS1/2 (Pkg of 2)	Adapter plate for mounting DIN connectors directly onto subrack, 84 tapped holes (2.5mm x 4.5mm pitch) To be used without backplane

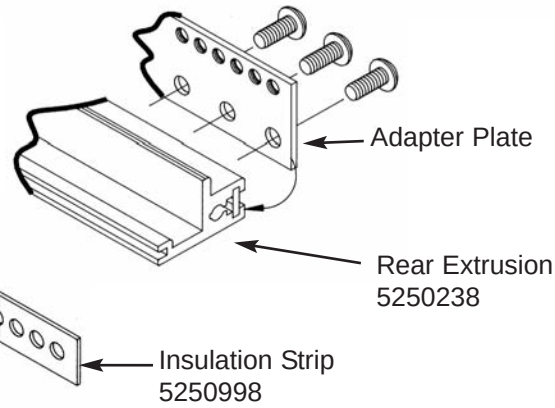

Insulation Strips

Mounted between backplane and rear extrusion

Part No.	HP	Width
5250998-84	84	17.00" (431.8mm)

Nut Strips

Threaded mounting holes spaced at 0.2" centers slide into extrusion grooves, can be used to anchor panels, cards or other components. Used on front & rear extrusions on all Vector DIN based metric subracks.

Part No.	HP	Width
5250268-84	84	17" (431.8mm)
5250268-63	63	12.8" (325.1mm)
5250268-42	42	8.6" (218.4mm)
5250268-21	21	4.4" (111.8mm)

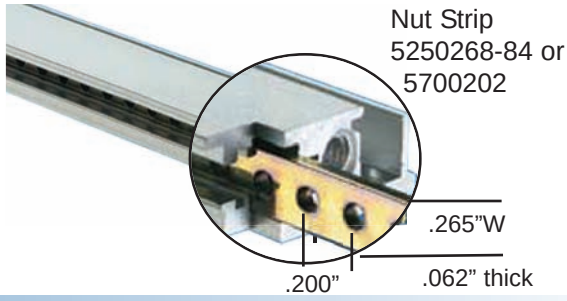

Extrusions

Front

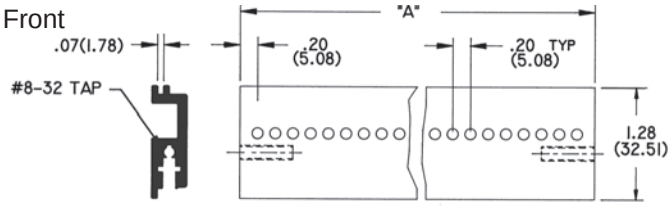

All extrusions available in any length

Part No.	HP	A
5250236-84	84	17.00" (431.8)
5250236-63	63	12.80" (325.8)
5250236-42	42	8.60" (218.4)
5250236-21	21	4.40" (11.8)

Pack of 12 8-32 screws, P/N HD94

Rear

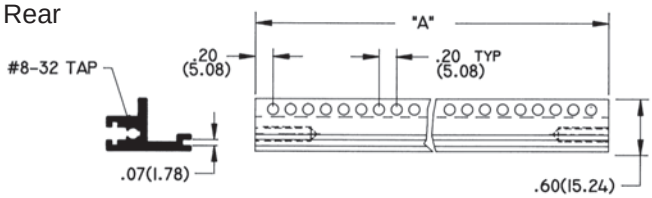

Part No.	HP	A
5250238-84	84	17.00" (431.8)
5250238-63	63	12.80" (325.8)
5250238-42	42	8.60" (218.4)
5250238-21	21	4.40" (11.8)

Pack of 12 8-32 screws, P/N HD94

Rear Center

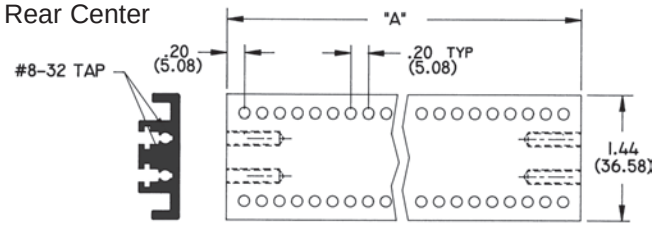

Part No.	HP	A
5250237-84	84	17.00" (431.8)
5250237-63	63	12.80" (325.8)
5250237-42	42	8.60" (218.4)
5250237-21	21	4.40" (11.8)

Pack of 12 8-32 screws, P/N HD94

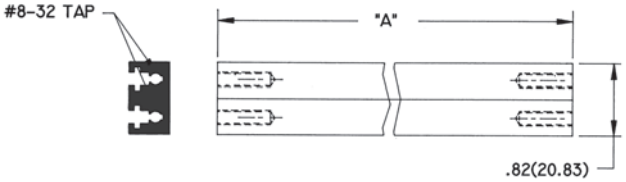

Part No.	HP	A
5250229-84	84	17.00" (431.8)
5250229-63	63	12.80" (325.8)
5250229-42	42	8.60" (218.4)
5250229-21	21	4.40" (11.8)

Pack of 12 8-32 screws, P/N HD94

REVISIONS				
ZONE	REV.	DESCRIPTION	DATE	APPROVED
ALL	B			

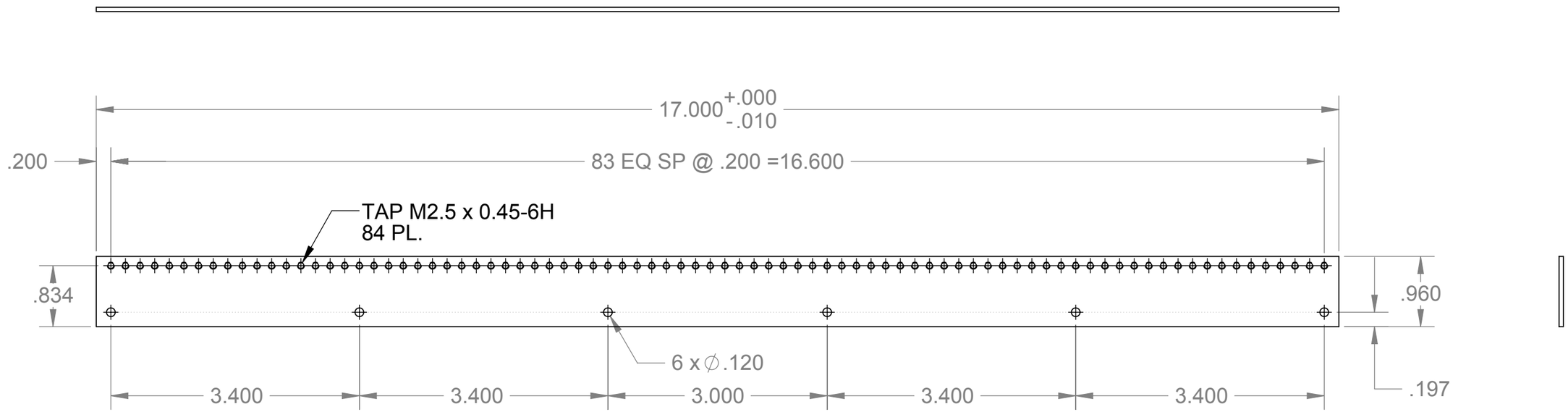

SOLD IN 17.000" LENGTH TO BE CUT TO SIZE
VECTOR P/N # AS1/2 (pkg of 2)

PART NO.	DESCRIPTION
AS1/2 (Pkg of 2)	Adapter plate for mounting DIN connectors directly onto subrack, 84 tapped holes (2.5mm x 4.5mm pitch) to be used without backplane

3. REMOVE ALL BURRS & SHARP EDGES
2. FINISH: ZINC PLATE PER ASTM-B-633, CLASS 3, TYPE I
1. MAT'L: STEEL, COLD ROLLED, 16 GA.

NOTES: UNLESS OTHERWISE SPECIFIED.

PROPRIETARY AND CONFIDENTIAL
THE INFORMATION CONTAINED IN THIS DRAWING IS THE SOLE PROPERTY OF VECTOR ELECTRONICS & TECH., INC. ANY REPRODUCTION IN PART OR AS A WHOLE WITHOUT THE WRITTEN PERMISSION OF VECTOR ELECTRONICS & TECH., INC. IS PROHIBITED.

UNLESS OTHERWISE SPECIFIED:
DIMENSIONS ARE IN INCHES
TOLERANCES:
FRACTIONAL ±
ANGULAR: ±.5°
TWO PLACE DECIMAL ±.02
THREE PLACE DECIMAL ±.005
INTERPRET GEOMETRIC TOLERANCING PER:
MATERIAL 1
FINISH 2
DO NOT SCALE DRAWING

	NAME	DATE
DRAWN	TRUSHAR	01/13/09
CHECKED		
ENG APPR.		
MFG APPR.		
Q.A.		

THIRD ANGLE PROJECTION

VECTOR ELECTRONICS & TECHNOLOGY, INC
11115 VANOWEN ST., NORTH HOLLYWOOD, CA 91605

DIN ADAPTER PLATE
VME CARD CAGE

SIZE	DWG. NO.	REV
B	5700201	B

SCALE: 2:3 | WEIGHT: | SHEET 1 OF 1

REVISIONS				
ZONE	REV.	DESCRIPTION	DATE	APPROVED
ALL	C	INC ECO 3213 & REDRAWN	08/13/86	
	C1	INC ECO 3873	08/13/90	

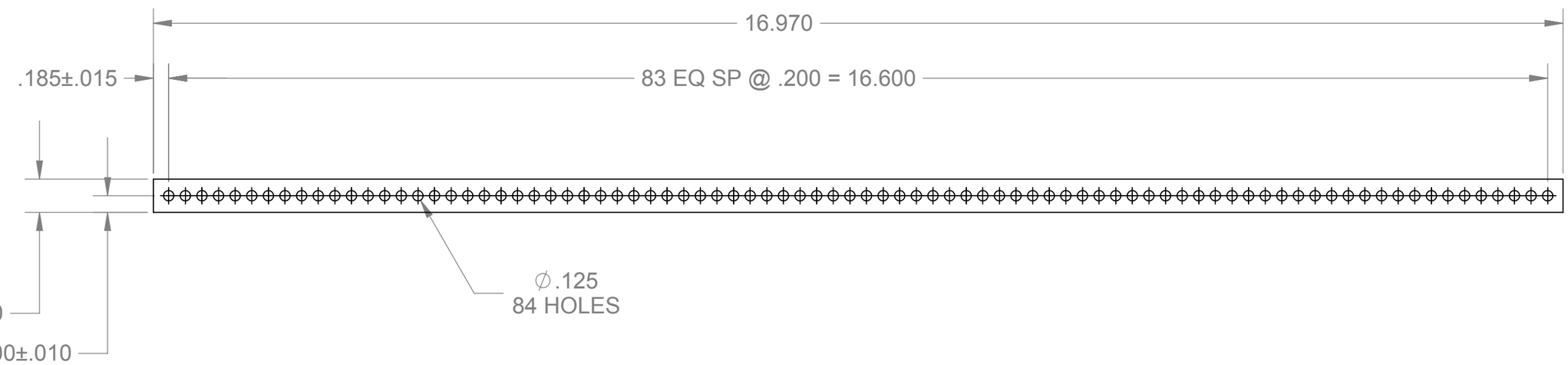

SOLD IN 16.970" LENGTH TO BE CUT TO SIZE
VECTOR P/N # 5250998-84

PART NO.	DESCRIPTION
5250998-84	Mounted between backplane and rear extrusion

2. INSPECTION: ACCEPTABLE UP TO .040 THK.
1. MAT'L: PP VINYL SHEET, .026 TO .033 THK., (COLOR : BLACK), P/N 99400003

NOTES: UNLESS OTHERWISE SPECIFIED.

PROPRIETARY AND CONFIDENTIAL
THE INFORMATION CONTAINED IN THIS DRAWING IS THE SOLE PROPERTY OF VECTOR ELECTRONICS & TECH., INC. ANY REPRODUCTION IN PART OR AS A WHOLE WITHOUT THE WRITTEN PERMISSION OF VECTOR ELECTRONICS & TECH., INC. IS PROHIBITED.

UNLESS OTHERWISE SPECIFIED:
DIMENSIONS ARE IN INCHES
TOLERANCES:
FRACTIONAL ±
ANGULAR: ±.5°
TWO PLACE DECIMAL ±.02
THREE PLACE DECIMAL ±.005
INTERPRET GEOMETRIC TOLERANCING PER:
MATERIAL 1
FINISH
DO NOT SCALE DRAWING

	NAME	DATE
DRAWN	TRUSHAR	01/12/09
CHECKED		
ENG APPR.		
MFG APPR.		
Q.A.		

THIRD ANGLE PROJECTION

VECTOR ELECTRONICS & TECHNOLOGY, INC
11115 VANOWEN ST., NORTH HOLLYWOOD, CA 91605

INSULATION STRIP
VME CARD CAGE

SIZE	DWG. NO.	REV
B	5210208	C1
SCALE: 1:1	WEIGHT:	SHEET 1 OF 1

REVISIONS				
ZONE	REV.	DESCRIPTION	DATE	APPROVED
ALL	A			

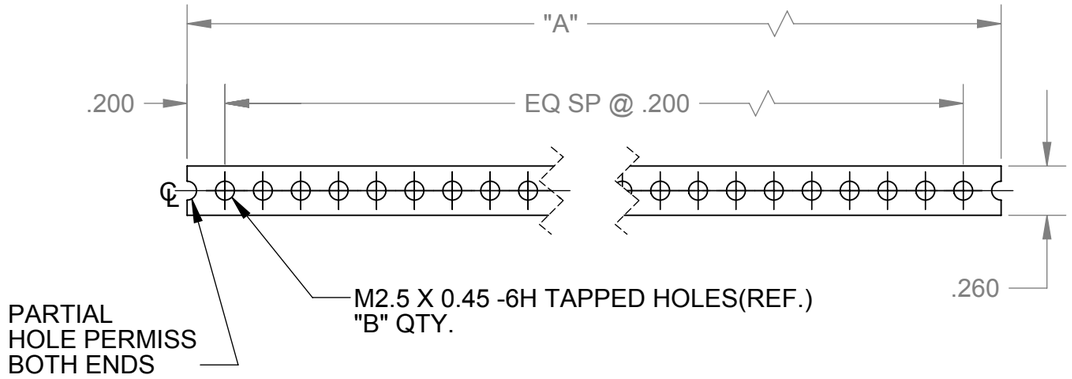

TABULATION		
PART NO.	"A"	"B"
5250268-03	0.800	3
5250268-04	1.000	4
5250268-05	1.200	5
5250268-06	1.400	6
5250268-07	1.600	7
5250268-08	1.800	8
5250268-09	2.000	9
5250268-10	2.200	10
5250268-11	2.400	11
5250268-12	2.600	12
5250268-13	2.800	13
5250268-14	3.000	14
5250268-15	3.200	15
5250268-16	3.400	16
5250268-17	3.600	17
5250268-18	3.800	18
5250268-19	4.000	19
5250268-20	4.200	20
5250268-21	4.400	21

6

TABULATION		
PART NO.	"A"	"B"
5250268-22	4.600	22
5250268-23	4.800	23
5250268-24	5.000	24
5250268-25	5.200	25
5250268-26	5.400	26
5250268-27	5.600	27
5250268-28	5.800	28
5250268-29	6.000	29
5250268-30	6.200	30
5250268-31	6.400	31
5250268-32	6.600	32
5250268-33	6.800	33
5250268-34	7.000	34
5250268-35	7.200	35
5250268-36	7.400	36
5250268-37	7.600	37
5250268-38	7.800	38
5250268-39	8.000	39
5250268-40	8.200	40
5250268-41	8.400	41
5250268-42	8.600	42

6

TABULATION		
PART NO.	"A"	"B"
5250268-43	8.800	43
5250268-44	9.000	44
5250268-45	9.200	45
5250268-46	9.400	46
5250268-47	9.600	47
5250268-48	9.800	48
5250268-49	10.000	49
5250268-50	10.200	50
5250268-51	10.400	51
5250268-52	10.600	52
5250268-53	10.800	53
5250268-54	11.000	54
5250268-55	11.200	55
5250268-56	11.400	56
5250268-57	11.600	57
5250268-58	11.800	58
5250268-59	12.000	59
5250268-60	12.200	60
5250268-61	12.400	61
5250268-62	12.600	62
5250268-63	12.800	63

6

TABULATION		
PART NO.	"A"	"B"
5250268-64	13.000	64
5250268-65	13.200	65
5250268-66	13.400	66
5250268-67	13.600	67
5250268-68	13.800	68
5250268-69	14.000	69
5250268-70	14.200	70
5250268-71	14.400	71
5250268-72	14.600	72
5250268-73	14.800	73
5250268-74	15.000	74
5250268-75	15.200	75
5250268-76	15.400	76
5250268-77	15.600	77
5250268-78	15.800	78
5250268-79	16.000	79
5250268-80	16.200	80
5250268-81	16.400	81
5250268-82	16.600	82
5250268-83	16.800	83
5250268-84	17.000	84

6

6. DASH NOS. INDICATE RACK SPACE IN "HP" UNITS (HOLE PITCH OF .200)
5. DEGREASE & SEAL CUT ENDS
4. MAKE FROM P/N # 5700202
3. REMOVE ALL BURRS & SHARP EDGES
2. FINISH: ZINC PLATE PER ASTM-B-633, CLASS 3, TYPE I
1. MAT'L: STEEL, COLD ROLLED, 16 GA.(.0598) (REF.)

NOTES: UNLESS OTHERWISE SPECIFIED.

PROPRIETARY AND CONFIDENTIAL
THE INFORMATION CONTAINED IN THIS DRAWING IS THE SOLE PROPERTY OF VECTOR ELECTRONICS & TECH., INC. ANY REPRODUCTION IN PART OR AS A WHOLE WITHOUT THE WRITTEN PERMISSION OF VECTOR ELECTRONICS & TECH., INC. IS PROHIBITED.

UNLESS OTHERWISE SPECIFIED:
DIMENSIONS ARE IN INCHES
TOLERANCES:
FRACTIONAL ±
ANGULAR: ±.5°
TWO PLACE DECIMAL ±.03
THREE PLACE DECIMAL ±.010
INTERPRET GEOMETRIC TOLERANCING PER:
MATERIAL 1
FINISH 2
DO NOT SCALE DRAWING

	NAME	DATE
DRAWN	TRUSHAR	01/09/09
CHECKED		
ENG APPR.		
MFG APPR.		
Q.A.		

THIRD ANGLE PROJECTION

VECTOR ELECTRONICS & TECHNOLOGY, INC
11115 VANOWEN ST., NORTH HOLLYWOOD, CA 91605

NUT STRIP CARD CAGES

SIZE	DWG. NO.	REV
B	5250268	A

SCALE: 1:1 | WEIGHT: | SHEET 1 OF 1

REVISIONS				
ZONE	REV.	DESCRIPTION	DATE	APPROVED
ALL	D	INCORP ECO 4061 & 4040	02/02/93	
	E	ECO 4282, ADD 5250236A	06/21/95	

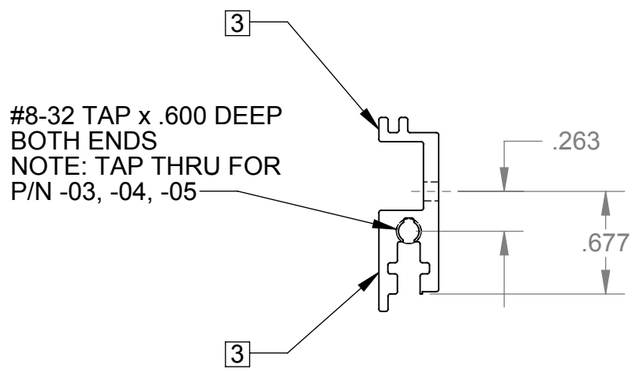

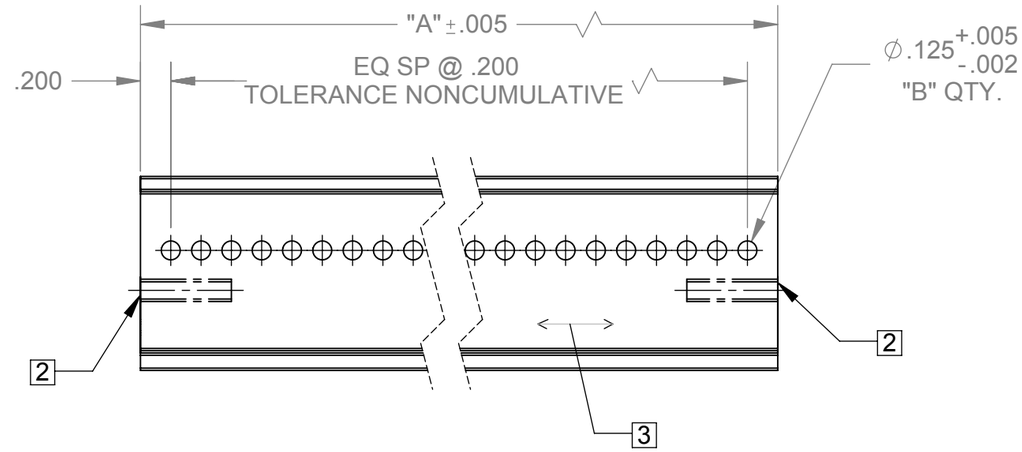

TABULATION		
PART NO. 7	"A"	"B"
5250236-03	0.800	3
5250236-04	1.000	4
5250236-05	1.200	5
5250236-06	1.400	6
5250236-07	1.600	7
5250236-08	1.800	8
5250236-09	2.000	9
5250236-10	2.200	10
5250236-11	2.400	11
5250236-12	2.600	12
5250236-13	2.800	13
5250236-14	3.000	14
5250236-15	3.200	15
5250236-16	3.400	16
5250236-17	3.600	17
5250236-18	3.800	18
5250236-19	4.000	19
5250236-20	4.200	20
5250236-21	4.400	21

TABULATION		
PART NO. 7	"A"	"B"
5250236-22	4.600	22
5250236-23	4.800	23
5250236-24	5.000	24
5250236-25	5.200	25
5250236-26	5.400	26
5250236-27	5.600	27
5250236-28	5.800	28
5250236-29	6.000	29
5250236-30	6.200	30
5250236-31	6.400	31
5250236-32	6.600	32
5250236-33	6.800	33
5250236-34	7.000	34
5250236-35	7.200	35
5250236-36	7.400	36
5250236-37	7.600	37
5250236-38	7.800	38
5250236-39	8.000	39
5250236-40	8.200	40
5250236-41	8.400	41
5250236-42	8.600	42

TABULATION		
PART NO. 7	"A"	"B"
5250236-43	8.800	43
5250236-44	9.000	44
5250236-45	9.200	45
5250236-46	9.400	46
5250236-47	9.600	47
5250236-48	9.800	48
5250236-49	10.000	49
5250236-50	10.200	50
5250236-51	10.400	51
5250236-52	10.600	52
5250236-53	10.800	53
5250236-54	11.000	54
5250236-55	11.200	55
5250236-56	11.400	56
5250236-57	11.600	57
5250236-58	11.800	58
5250236-59	12.000	59
5250236-60	12.200	60
5250236-61	12.400	61
5250236-62	12.600	62
5250236-63	12.800	63

TABULATION		
PART NO. 7	"A"	"B"
5250236-64	13.000	64
5250236-65	13.200	65
5250236-66	13.400	66
5250236-67	13.600	67
5250236-68	13.800	68
5250236-69	14.000	69
5250236-70	14.200	70
5250236-71	14.400	71
5250236-72	14.600	72
5250236-73	14.800	73
5250236-74	15.000	74
5250236-75	15.200	75
5250236-76	15.400	76
5250236-77	15.600	77
5250236-78	15.800	78
5250236-79	16.000	79
5250236-80	16.200	80
5250236-81	16.400	81
5250236-82	16.600	82
5250236-83	16.800	83
5250236-84	17.000	84

5250236A FINISH : GOLD IRRIDITE

7. DASH NO(S). INDICATE RACK SPACE IN "HP" UNITS (HOLE PITCH OF .200)
6. FINISH: SATIN ETCH, 7 MIN., CHEM FILM, CLEAR, CLASS 1A, IAW MIL-C-5541
5. DEGREASE
4. REMOVE ALL BURS & SHARP EDGES
3. FINE GRAIN FINISH ON SURFACES INDICATED (3 PL.)
2. ENDS TO BE SQUARE WITHIN: .0025 PER INCH OF WIDTH
1. MAT'L: MAKE FROM P/N # 5280233

NOTES: UNLESS OTHERWISE SPECIFIED.

PROPRIETARY AND CONFIDENTIAL
THE INFORMATION CONTAINED IN THIS DRAWING IS THE SOLE PROPERTY OF VECTOR ELECTRONICS & TECH., INC. ANY REPRODUCTION IN PART OR AS A WHOLE WITHOUT THE WRITTEN PERMISSION OF VECTOR ELECTRONICS & TECH., INC. IS PROHIBITED.

UNLESS OTHERWISE SPECIFIED:
DIMENSIONS ARE IN INCHES
TOLERANCES:
FRACTIONAL ±
ANGULAR: ±.5°
TWO PLACE DECIMAL ±.XX
THREE PLACE DECIMAL ±.005
INTERPRET GEOMETRIC TOLERANCING PER:
MATERIAL 1
FINISH 6
DO NOT SCALE DRAWING

	NAME	DATE
DRAWN	TRUSHAR	01/12/09
CHECKED		
ENG APPR.		
MFG APPR.		
Q.A.		

THIRD ANGLE PROJECTION

VECTOR ELECTRONICS & TECHNOLOGY, INC
11115 VANOWEN ST., NORTH HOLLYWOOD, CA 91605

EXTRUSION FRONT
FULL SIZE CAGES & DIVIDER KITS

SIZE	DWG. NO.	REV
B	5250236	E

SCALE: 1:1 WEIGHT: SHEET 1 OF 1

REVISIONS				
ZONE	REV.	DESCRIPTION	DATE	APPROVED
ALL	A	PROD. REL.	05/01/86	
	B	INCORP ECO 3157	05/20/86	
	C	ECO 4283, ADD 5250238A	06/21/95	

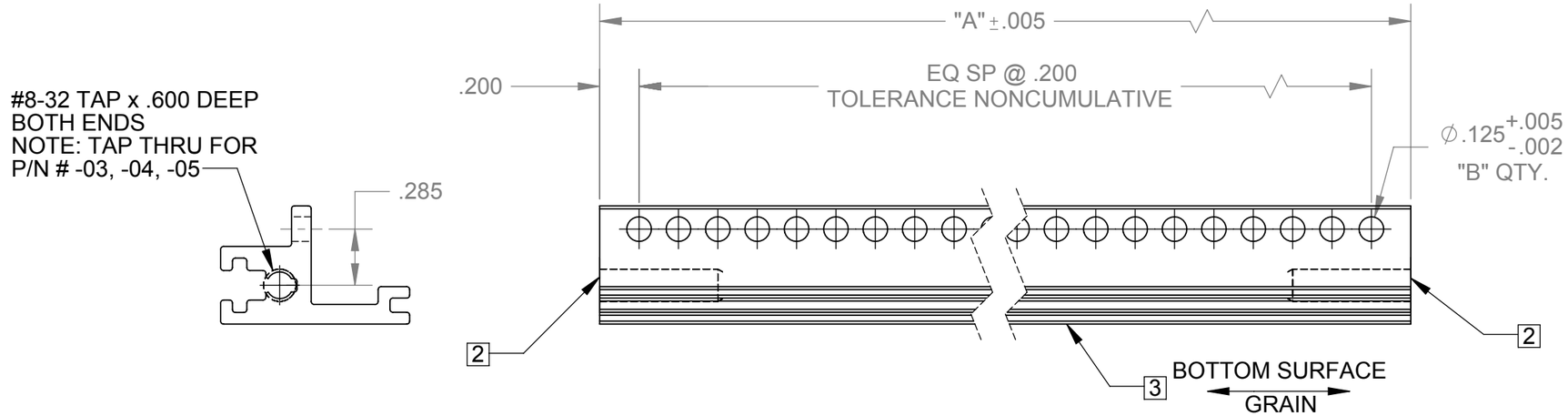

TABULATION		
PART NO. 7	"A"	"B"
5250238-03	0.800	3
5250238-04	1.000	4
5250238-05	1.200	5
5250238-06	1.400	6
5250238-07	1.600	7
5250238-08	1.800	8
5250238-09	2.000	9
5250238-10	2.200	10
5250238-11	2.400	11
5250238-12	2.600	12
5250238-13	2.800	13
5250238-14	3.000	14
5250238-15	3.200	15
5250238-16	3.400	16
5250238-17	3.600	17
5250238-18	3.800	18
5250238-19	4.000	19
5250238-20	4.200	20
5250238-21	4.400	21

TABULATION		
PART NO. 7	"A"	"B"
5250238-22	4.600	22
5250238-23	4.800	23
5250238-24	5.000	24
5250238-25	5.200	25
5250238-26	5.400	26
5250238-27	5.600	27
5250238-28	5.800	28
5250238-29	6.000	29
5250238-30	6.200	30
5250238-31	6.400	31
5250238-31	6.600	32
5250238-33	6.800	33
5250238-34	7.000	34
5250238-35	7.200	35
5250238-36	7.400	36
5250238-37	7.600	37
5250238-38	7.800	38
5250238-39	8.000	39
5250238-40	8.200	40
5250238-41	8.400	41
5250238-42	8.600	42

TABULATION		
PART NO. 7	"A"	"B"
5250238-43	8.800	43
5250238-44	9.000	44
5250238-45	9.200	45
5250238-46	9.400	46
5250238-47	9.600	47
5250238-48	9.800	48
5250238-49	10.000	49
5250238-50	10.200	50
5250238-51	10.400	51
5250238-52	10.600	52
5250238-53	10.800	53
5250238-54	11.000	54
5250238-55	11.200	55
5250238-56	11.400	56
5250238-57	11.600	57
5250238-58	11.800	58
5250238-59	12.000	59
5250238-60	12.200	60
5250238-61	12.400	61
5250238-62	12.600	62
5250238-63	12.800	63

TABULATION		
PART NO. 7	"A"	"B"
5250238-64	13.000	64
5250238-65	13.200	65
5250238-66	13.400	66
5250238-67	13.600	67
5250238-68	13.800	68
5250238-69	14.000	69
5250238-70	14.200	70
5250238-71	14.400	71
5250238-72	14.600	72
5250238-73	14.800	73
5250238-74	15.000	74
5250238-75	15.200	75
5250238-76	15.400	76
5250238-77	15.600	77
5250238-78	15.800	78
5250238-79	16.000	79
5250238-80	16.200	80
5250238-81	16.400	81
5250238-82	16.600	82
5250238-83	16.800	83
5250238-84	17.000	84

5250238A FINISH: GOLD IRRIDITE

7. DASH NO(S). INDICATE RACK SPACE IN "HP" UNITS (HOLE PITCH OF .200)
6. FINISH: SATIN ETCH, 7 MIN., CHEM FILM, CLEAR, CLASS 1A, IAW MIL-C-5541
5. DEGREASE
4. REMOVE ALL BURS & SHARP EDGES
3. FINE GRAIN FINISH ON SURFACES INDICATED ONLY
2. ENDS TO BE SQUARE WITHIN: .0025 PER INCH OF WIDTH
1. MAT'L: MAKE FROM P/N # 5280234

NOTES: UNLESS OTHERWISE SPECIFIED.

PROPRIETARY AND CONFIDENTIAL
THE INFORMATION CONTAINED IN THIS DRAWING IS THE SOLE PROPERTY OF VECTOR ELECTRONICS & TECH., INC. ANY REPRODUCTION IN PART OR AS A WHOLE WITHOUT THE WRITTEN PERMISSION OF VECTOR ELECTRONICS & TECH., INC. IS PROHIBITED.

UNLESS OTHERWISE SPECIFIED:
DIMENSIONS ARE IN INCHES
TOLERANCES:
FRACTIONAL ±
ANGULAR: ±.5°
TWO PLACE DECIMAL ±.XX
THREE PLACE DECIMAL ±.005
INTERPRET GEOMETRIC TOLERANCING PER:
MATERIAL 1
FINISH 6
DO NOT SCALE DRAWING

	NAME	DATE
DRAWN	TRUSHAR	01/12/09
CHECKED		
ENG APPR.		
MFG APPR.		
Q.A.		

THIRD ANGLE PROJECTION

VECTOR ELECTRONICS & TECHNOLOGY, INC
11115 VANOWEN ST., NORTH HOLLYWOOD, CA 91605

EXTRUSION REAR
VME CARD CAGE

SIZE	DWG. NO.	REV
B	5250238	C
SCALE: 1:1	WEIGHT:	SHEET 1 OF 1

REVISIONS				
ZONE	REV.	DESCRIPTION	DATE	APPROVED
ALL	B	REVISED & REDRAWN, ECO 3156	05/20/86	

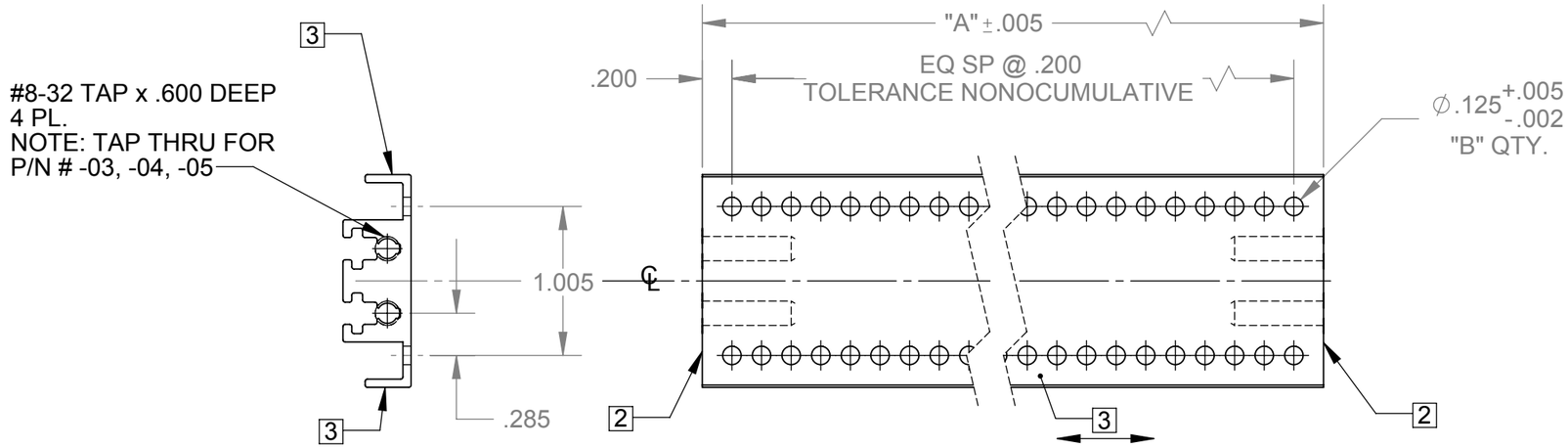

TABULATION		
PART NO. 7	"A"	"B"
5250237-03	0.800	3
5250237-04	1.000	4
5250237-05	1.200	5
5250237-06	1.400	6
5250237-07	1.600	7
5250237-08	1.800	8
5250237-09	2.000	9
5250237-10	2.200	10
5250237-11	2.400	11
5250237-12	2.600	12
5250237-13	2.800	13
5250237-14	3.000	14
5250237-15	3.200	15
5250237-16	3.400	16
5250237-17	3.600	17
5250237-18	3.800	18
5250237-19	4.000	19
5250237-20	4.200	20
5250237-21	4.400	21

TABULATION		
PART NO. 7	"A"	"B"
5250237-22	4.600	22
5250237-23	4.800	23
5250237-24	5.000	24
5250237-25	5.200	25
5250237-26	5.400	26
5250237-27	5.600	27
5250237-28	5.800	28
5250237-29	6.000	29
5250237-30	6.200	30
5250237-31	6.400	31
5250237-32	6.600	32
5250237-33	6.800	33
5250237-34	7.000	34
5250237-35	7.200	35
5250237-36	7.400	36
5250237-37	7.600	37
5250237-38	7.800	38
5250237-39	8.000	39
5250237-40	8.200	40
5250237-41	8.400	41
5250237-42	8.600	42

TABULATION		
PART NO. 7	"A"	"B"
5250237-43	8.800	43
5250237-44	9.000	44
5250237-45	9.200	45
5250237-46	9.400	46
5250237-47	9.600	47
5250237-48	9.800	48
5250237-49	10.000	49
5250237-50	10.200	50
5250237-51	10.400	51
5250237-52	10.600	52
5250237-53	10.800	53
5250237-54	11.000	54
5250237-55	11.200	55
5250237-56	11.400	56
5250237-57	11.600	57
5250237-58	11.800	58
5250237-59	12.000	59
5250237-60	12.200	60
5250237-61	12.400	61
5250237-62	12.600	62
5250237-63	12.800	63

TABULATION		
PART NO. 7	"A"	"B"
5250237-64	13.000	64
5250237-65	13.200	65
5250237-66	13.400	66
5250237-67	13.600	67
5250237-68	13.800	68
5250237-69	14.000	69
5250237-70	14.200	70
5250237-71	14.400	71
5250237-72	14.600	72
5250237-73	14.800	73
5250237-74	15.000	74
5250237-75	15.200	75
5250237-76	15.400	76
5250237-77	15.600	77
5250237-78	15.800	78
5250237-79	16.000	79
5250237-80	16.200	80
5250237-81	16.400	81
5250237-82	16.600	82
5250237-83	16.800	83
5250237-84	17.000	84

7. DASH NO(S). INDICATE RACK SPACE IN "HP" UNITS (HOLE PITCH OF .200)
6. FINISH: SATIN ETCH, 7 MIN., CHEM FILM, CLEAR, CLASS 1A, IAW MIL-C-5541
5. DEGREASE
4. REMOVE ALL BURS & SHARP EDGES
3. FINE GRAIN FINISH ON SURFACES INDICATED (3 PL.)
2. ENDS TO BE SQUARE WITHIN: .0025 PER INCH OF WIDTH
1. MAT'L: MAKE FROM P/N # 5280220

NOTES: UNLESS OTHERWISE SPECIFIED.

PROPRIETARY AND CONFIDENTIAL
THE INFORMATION CONTAINED IN THIS DRAWING IS THE SOLE PROPERTY OF VECTOR ELECTRONICS & TECH., INC. ANY REPRODUCTION IN PART OR AS A WHOLE WITHOUT THE WRITTEN PERMISSION OF VECTOR ELECTRONICS & TECH., INC. IS PROHIBITED.

UNLESS OTHERWISE SPECIFIED:
DIMENSIONS ARE IN INCHES
TOLERANCES:
FRACTIONAL ±
ANGULAR: ±.5°
TWO PLACE DECIMAL ±.XX
THREE PLACE DECIMAL ±.005
INTERPRET GEOMETRIC TOLERANCING PER:
MATERIAL 1
FINISH 6
DO NOT SCALE DRAWING

	NAME	DATE
DRAWN	TRUSHAR	01/12/09
CHECKED		
ENG APPR.		
MFG APPR.		
Q.A.		

THIRD ANGLE PROJECTION

VECTOR ELECTRONICS & TECHNOLOGY, INC
11115 VANOWEN ST., NORTH HOLLYWOOD, CA 91605

EXTRUSION CENTER
VME CARD CAGE

SIZE	DWG. NO.	REV
B	5250237	B

SCALE: 1:1 | WEIGHT: | SHEET 1 OF 1

REVISIONS				
ZONE	REV.	DESCRIPTION	DATE	APPROVED
ALL	A	REVISED & REDRAWN		

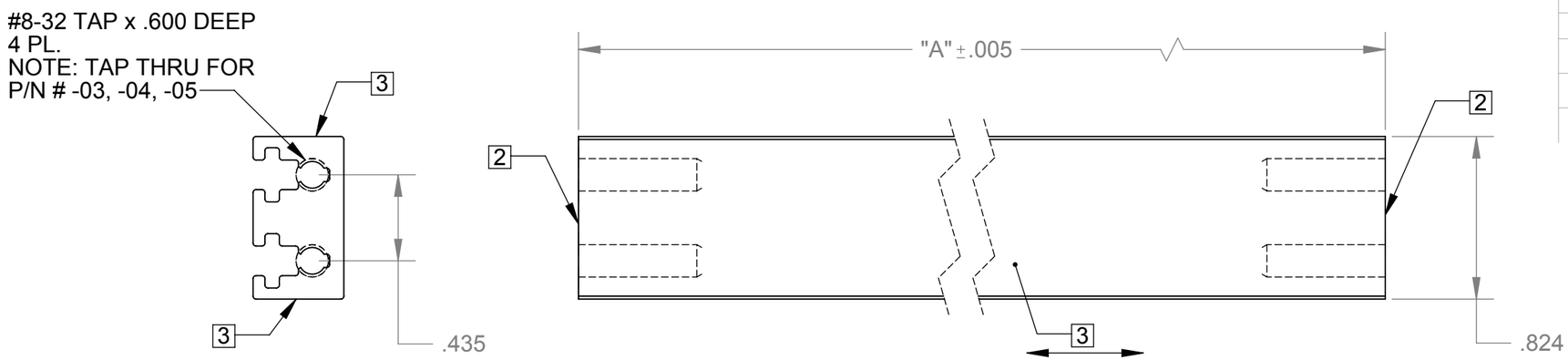

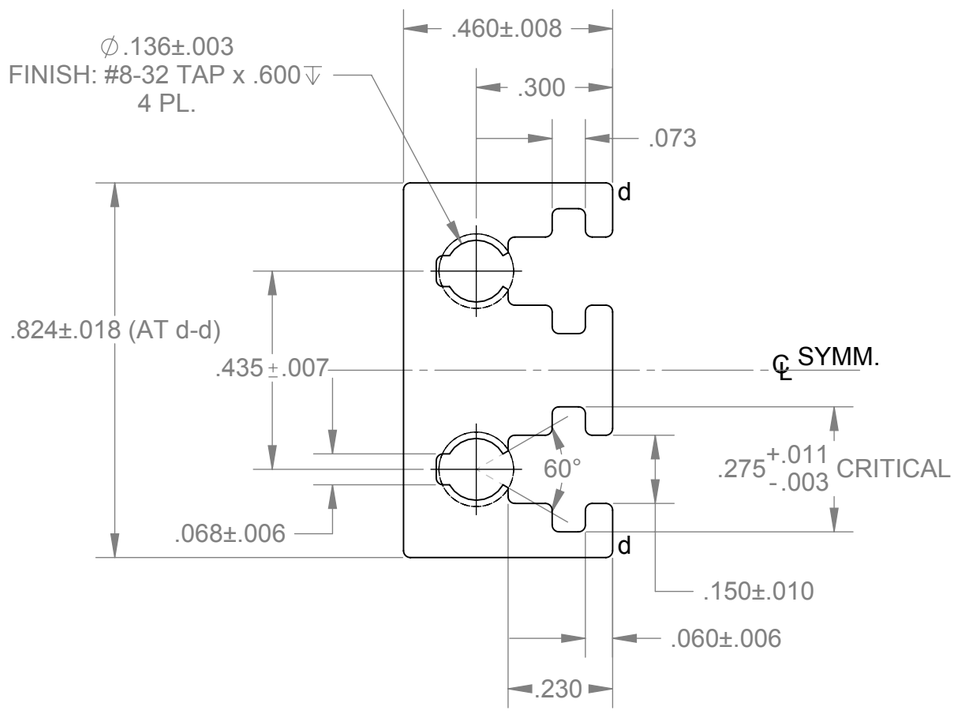

TABULATION	
PART NO. 7	"A"
5250229-03	0.800
5250229-04	1.000
5250229-05	1.200
5250229-06	1.400
5250229-07	1.600
5250229-08	1.800
5250229-09	2.000
5250229-10	2.200
5250229-11	2.400
5250229-12	2.600
5250229-13	2.800
5250229-14	3.000
5250229-15	3.200
5250229-16	3.400
5250229-17	3.600
5250229-18	3.800
5250229-19	4.000
5250229-20	4.200
5250229-21	4.400

TABULATION	
PART NO. 7	"A"
5250229-22	4.600
5250229-23	4.800
5250229-24	5.000
5250229-25	5.200
5250229-26	5.400
5250229-27	5.600
5250229-28	5.800
5250229-29	6.000
5250229-30	6.200
5250229-31	6.400
5250229-32	6.600
5250229-33	6.800
5250229-34	7.000
5250229-35	7.200
5250229-36	7.400
5250229-37	7.600
5250229-38	7.800
5250229-39	8.000
5250229-40	8.200
5250229-41	8.400
5250229-42	8.600

TABULATION	
PART NO. 7	"A"
5250229-43	8.800
5250229-44	9.000
5250229-45	9.200
5250229-46	9.400
5250229-47	9.600
5250229-48	9.800
5250229-49	10.000
5250229-50	10.200
5250229-51	10.400
5250229-52	10.600
5250229-53	10.800
5250229-54	11.000
5250229-55	11.200
5250229-56	11.400
5250229-57	11.600
5250229-58	11.800
5250229-59	12.000
5250229-60	12.200
5250229-61	12.400
5250229-62	12.600
5250229-63	12.800

TABULATION	
PART NO. 7	"A"
5250229-64	13.000
5250229-65	13.200
5250229-66	13.400
5250229-67	13.600
5250229-68	13.800
5250229-69	14.000
5250229-70	14.200
5250229-71	14.400
5250229-72	14.600
5250229-73	14.800
5250229-74	15.000
5250229-75	15.200
5250229-76	15.400
5250229-77	15.600
5250229-78	15.800
5250229-79	16.000
5250229-80	16.200
5250229-81	16.400
5250229-82	16.600
5250229-83	16.800
5250229-84	17.000

7. DASH NO(S). INDICATE RACK SPACE IN "HP" UNITS (HOLE PITCH OF .200)
6. FINISH: SATIN ETCH, 7 MIN., CHEM FILM, CLEAR, CLASS 1A, IAW MIL-C-5541
5. DEGREASE
4. REMOVE ALL BURS & SHARP EDGES
3. FINE GRAIN FINISH ON SURFACES INDICATED (3 PL.)
2. ENDS TO BE SQUARE WITHIN: .0025 PER INCH OF WIDTH
1. MAT'L: MAKE FROM P/N # 5280220

NOTES: UNLESS OTHERWISE SPECIFIED.

PROPRIETARY AND CONFIDENTIAL
THE INFORMATION CONTAINED IN THIS DRAWING IS THE SOLE PROPERTY OF VECTOR ELECTRONICS & TECH., INC. ANY REPRODUCTION IN PART OR AS A WHOLE WITHOUT THE WRITTEN PERMISSION OF VECTOR ELECTRONICS & TECH., INC. IS PROHIBITED.

UNLESS OTHERWISE SPECIFIED:
DIMENSIONS ARE IN INCHES
TOLERANCES:
FRACTIONAL ±
ANGULAR: ±.5°
TWO PLACE DECIMAL ±.XX
THREE PLACE DECIMAL ±.005
INTERPRET GEOMETRIC TOLERANCING PER:
MATERIAL 1
FINISH 6
DO NOT SCALE DRAWING

	NAME	DATE
DRAWN	TRUSHAR	01/12/09
CHECKED		
ENG APPR.		
MFG APPR.		
Q.A.		

THIRD ANGLE PROJECTION

VECTOR ELECTRONICS & TECHNOLOGY, INC
11115 VANOWEN ST., NORTH HOLLYWOOD, CA 91605

EXTRUSION CENTER NARROW
VME CARD CAGE

SIZE	DWG. NO.	REV
B	5250229	A
SCALE: 1:1	WEIGHT:	SHEET 1 OF 1