THIS DRAWING IS UNPUBLISHED. RELEASED FOR PUBLICATION - ,- .
© COPYRIGHT - By - ALL RIGHTS RESERVED.

LOC	DIST
CM	0

REVISIONS

P	LTR	DESCRIPTION	DATE	DWN	APVD
	G	REVISED PER ECO-12-016930	050CT12	KH	SM

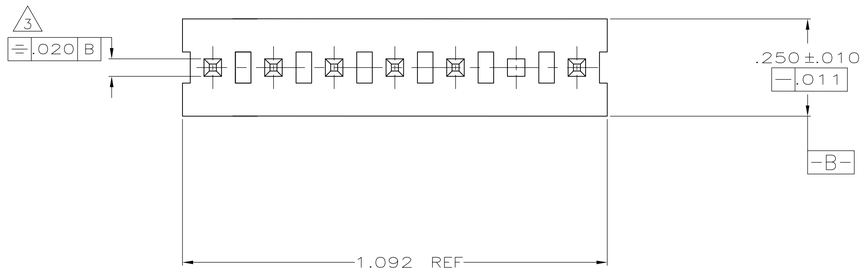

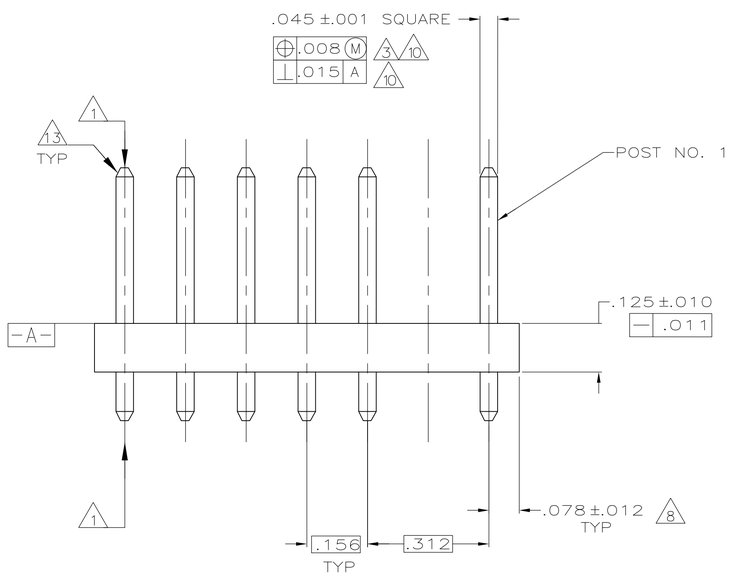

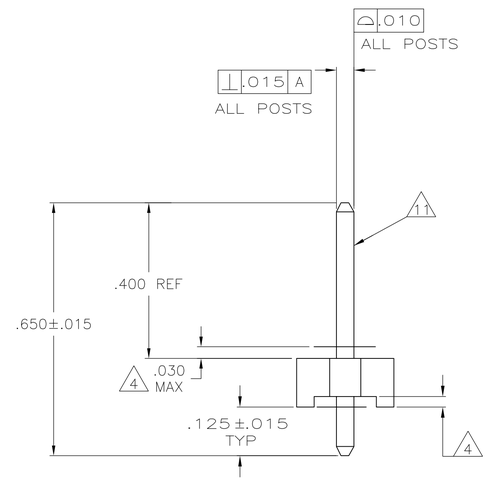

1. POST TO WITHSTAND 13 NEWTONS (3LBS.) MIN. AXIAL FORCE IN BOTH DIRECTIONS SHOWN WITHOUT DISLODGING.
2. TOLERANCES APPLY TO SOLDER SIDE OF BOARD.
3. MEASURED AT SURFACE -A-
4. PLASTIC FLASH PERMITTED IN THIS AREA.
5. PARTS COMPLY WITH AMP SOLDERABILITY SPEC. NO. 109-11-2.
6. ONE HOLE MAY BE UNDERSIZED (.065/.060 DIA.) FOR ASSEMBLY RETENTION DURING WAVE SOLDERING.
7. MATERIAL: HEADER-THERMOPLASTIC POLYESTER GLASS-FILLED 94V-0(NATURAL) POST-COPPER ALLOY (TIN PLATED)
8. COORDINATE DIMENSION APPLIES FROM CENTER OF ACTUAL FEATURE.
9. PLASTIC BURRS CAUSED BY CUT-OFF TOOLING ARE PERMITTED WITHIN THE MAXIMUM TOLERANCE ENVELOPE.
10. POST TO BE MEASURED WHEN STRIP IS HELD FLAT.
11. POST MUST WITHSTAND TWO 90° BENDS AGAINST EXTRUSION WITHOUT BREAKING.
12. DIMENSION SHOULD BE .140 MIN WHEN MATING WITH A MTA-156 CONNECTOR ASSEMBLY OR A SL-156 CONNECTOR ASSEMBLY.
13. PIN BURR OF .005 MAX. VERTICAL AND .003 MAX. HORIZONTAL PERMITTED AT POST TIPS ON BOTH ENDS.

641991-1 SHOWN

POST NUMBER OMITTED	PART NUMBER
1, 4, & 6	641991-5
4 & 6	641991-4
2 & 5	641991-3
5	641991-2
2	641991-1

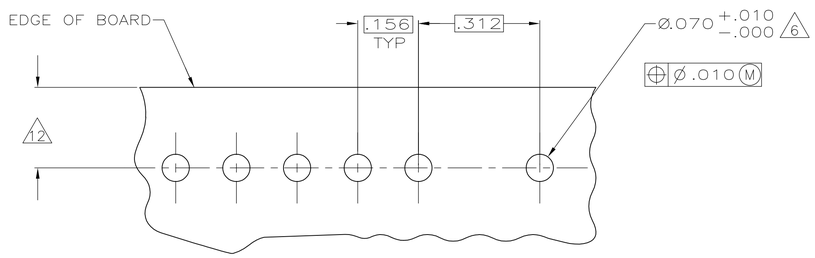

RECOMMENDED MOUNTING HOLE PATTERN FOR .063 THICK P.C. BOARD 2

IN	MM	IN	MM
.045	1.14	1.092	27.74
.031	0.79	.700	17.78
.030	0.76	.450	11.43
.020	0.51	.312	7.92
.015	0.38	.250	6.35
.012	0.30	.156	3.96
.011	0.28	.140	3.56
.010	0.25	.125	3.18
.008	0.20	.078	1.98
.005	0.13	.070	1.78
.003	0.08	.065	1.65
.001	0.03	.063	1.60
.000	0.00	.060	1.52

CONVERSION TABLE

THIS DRAWING IS A CONTROLLED DOCUMENT.

DIMENSIONS: INCHES

TOLERANCES UNLESS OTHERWISE SPECIFIED:
0 PLC ± -
1 PLC ± -
2 PLC ± -
3 PLC ± .005
4 PLC ± -
ANGLES ± 0°30'

MATERIAL 7 FINISH 7

DWN J. HUFFMAN 4-21-97
CHK R. SWING 4-21-97
APVD C. JONES 4-22-97
PRODUCT SPEC —
APPLICATION SPEC —
WEIGHT —

TE Connectivity

NAME MTA-156 HEADER ASSEMBLY,PLAIN, STRAIGHT, .045 SQ. SQUARE POST TIN PLATED, 7 POSITION, OMITTED POST

SIZE A1 | CAGE CODE 00779 | DRAWING NO C-641991 | RESTRICTED TO —

CUSTOMER DRAWING | SCALE 5:1 | SHEET 1 OF 1 | REV G

4805 (3/11)