Feb.1.2018 Copyright 2018 HIROSE ELECTRIC CO., LTD. All Rights Reserved.

	COUNT	DESCRIPTION OF REVISIONS	BY	CHKD	DATE		COUNT	DESCRIPTION OF REVISIONS	BY	CHKD	DATE
1	1	RE-H-06185	I.D	H.U	'04.04.12						. .
					. .						. .
					. .						. .

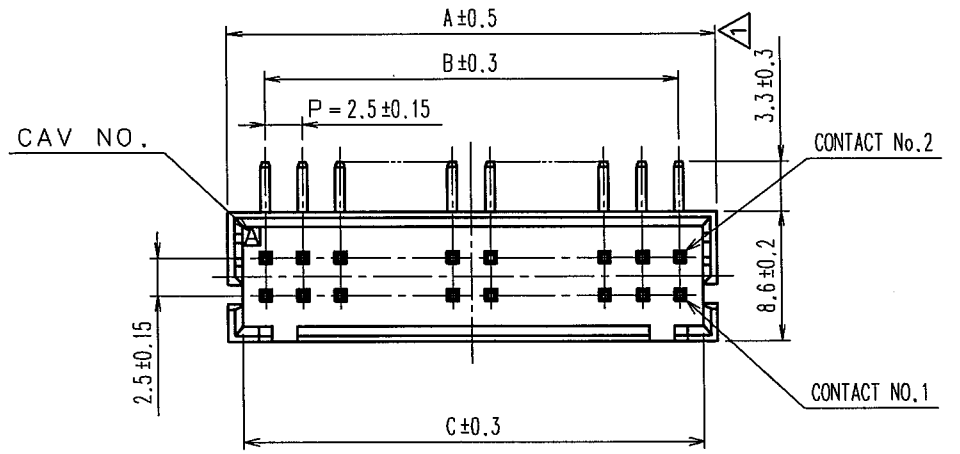

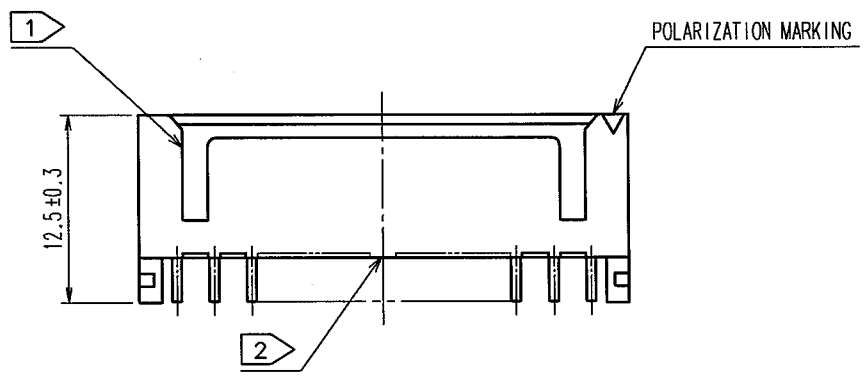

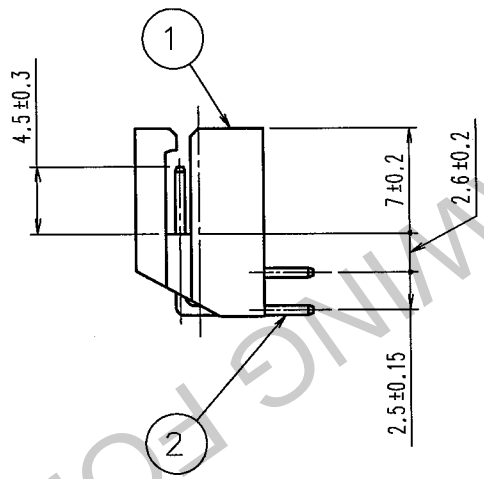

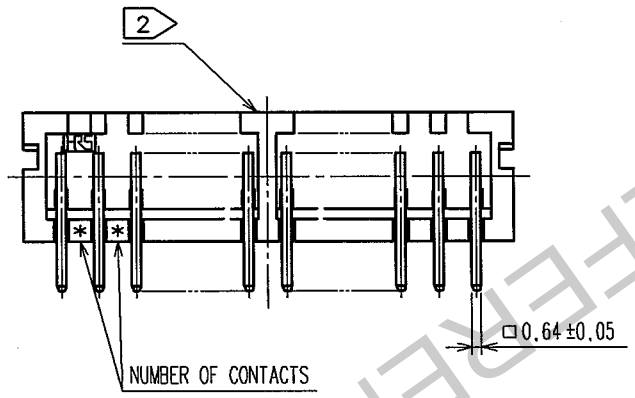

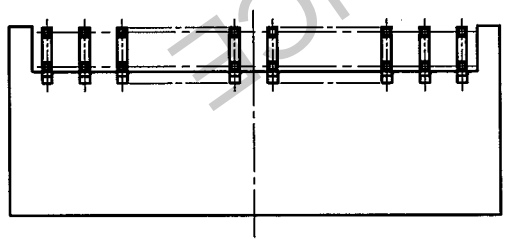

PART NO.	CODE NO.	A	B	C
CL541-2051-9-00	DF1BZ- 4DP-2.5DS	7.5	2.5	5.6
CL541-2052-1-00	DF1BZ- 6DP-2.5DS	10.0	5.0	8.1
CL541-2053-4-00	DF1BZ- 8DP-2.5DS	12.5	7.5	10.6
CL541-2054-7-00	DF1BZ-10DP-2.5DS	15.0	10.0	13.1
CL541-2055-0-00	DF1BZ-12DP-2.5DS	17.5	12.5	15.6
CL541-2056-2-00	DF1BZ-14DP-2.5DS	20.0	15.0	18.1
CL541-2057-5-00	DF1BZ-16DP-2.5DS	22.5	17.5	20.6
CL541-2058-8-00	DF1BZ-18DP-2.5DS	25.0	20.0	23.1
CL541-2059-0-00	DF1BZ-20DP-2.5DS	27.5	22.5	25.6
CL541-2060-0-00	DF1BZ-22DP-2.5DS	30.0	25.0	28.1
CL541-2061-2-00	DF1BZ-24DP-2.5DS	32.5	27.5	30.6
CL541-2062-5-00	DF1BZ-26DP-2.5DS	35.0	30.0	33.1
CL541-2063-8-00	DF1BZ-28DP-2.5DS	37.5	32.5	35.6
CL541-2064-0-00	DF1BZ-30DP-2.5DS	40.0	35.0	38.1
CL541-2065-3-00	DF1BZ-34DP-2.5DS	45.0	40.0	43.1
CL541-2066-6-00	DF1BZ-36DP-2.5DS	47.5	42.5	45.6
CL541-2067-9-00	DF1BZ-40DP-2.5DS	52.5	47.5	50.6

RECOMMENDED PATTERN(5:1)

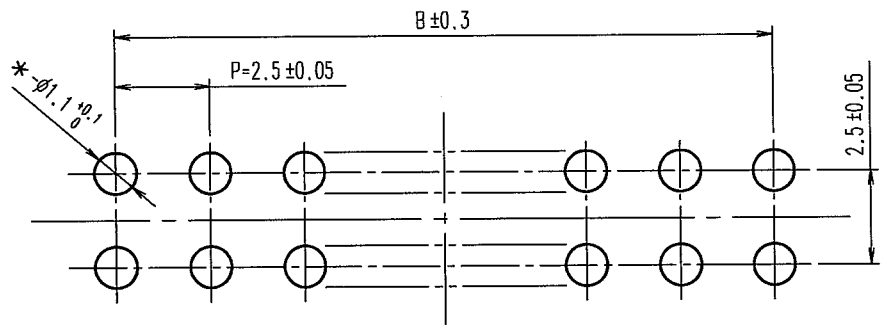

NOTES 1 :FOR 4 AND 6 CONTACTS,ONE MIS-INSERTION DEPRESSION SHALL BE MADE,FOR OTHERS, 2 MIS-INSERTION DEPRESSION AS PER DRAWING.
2 :STAND-OFF SHALL MOVE RIGHT FOR 1.25 WHEN ONE-SIDE,ONE-ROW IS ODD. (STAND-OFF DESIGN SHALL BE AVAILABLE FOR 10 CONTACTS AND OVER)

NO.	MATERIAL	FINISH, REMARKS
1	POLYAMIDE	UL94V-0,NATURAL(WHITE)
2	BRASS	SURFACE:TIN PLATED 1μm min UNDER PLATING:NICKEL PLATED 0.5μm min

CODE NO.(OLD)	DRAWN	DESIGNED	CHECKED	APPROVED	RELEASED
	F.Matsuki '04.03.25	H.Umehara '04.03.25	T.Miyazaki '04.03.25	T.Oma '04.03.25	

SCALE 2 : 1
UNITS mm
DRAWING NO. EDC3-305815-01
HRS HIROSE ELECTRIC CO., LTD
PART NO. DF1BZ-*DP-2.5DS
CODE NO. CL541-
1/1

TO

DRAWING FOR REFERENCE