Feb.1.2018 Copyright 2018 HIROSE ELECTRIC CO., LTD. All Rights Reserved

	COUNT	DESCRIPTION OF REVISIONS	BY	CHKD	DATE		COUNT	DESCRIPTION OF REVISIONS	BY	CHKD	DATE
△					. .	△					. .
△					. .	△					. .
△					. .	△					. .

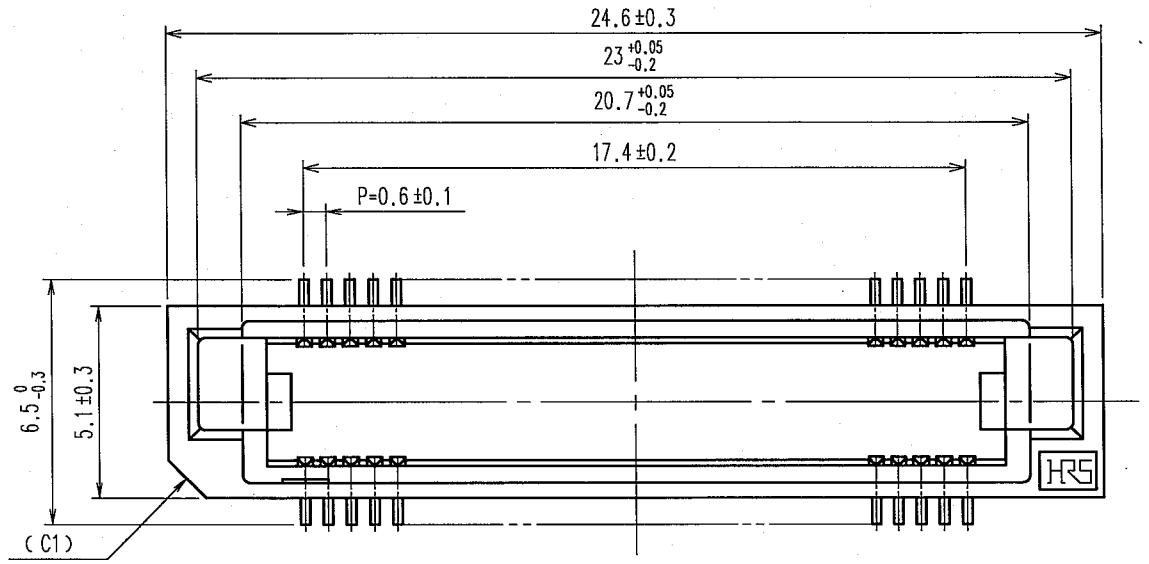

RECOMMENDED LAND PATTERN DIMENSION OF PCB (MOUNTING SIDE) (2:1)

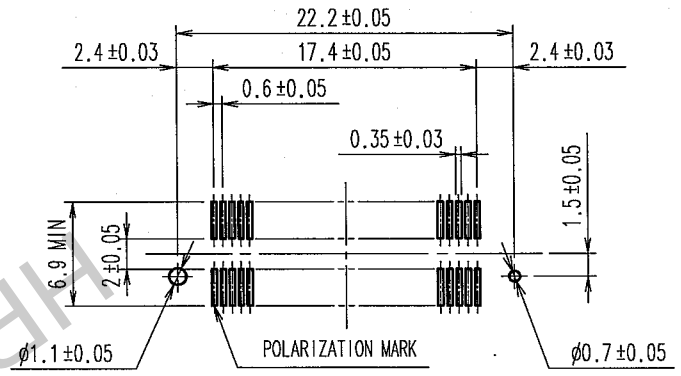

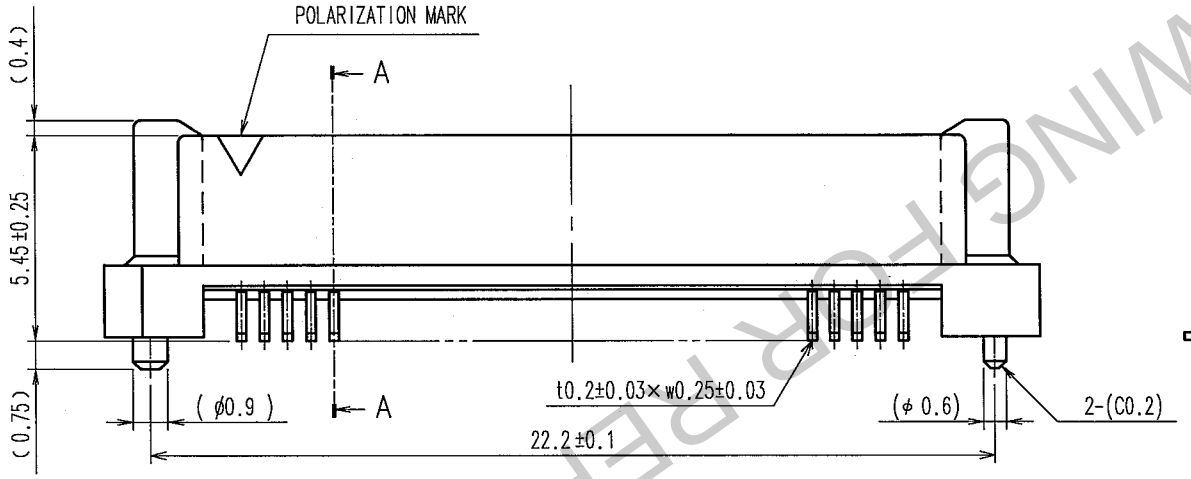

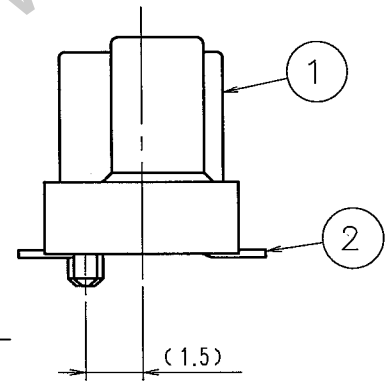

A−A

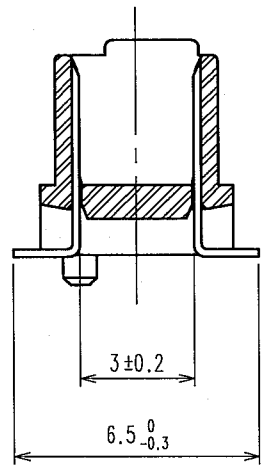

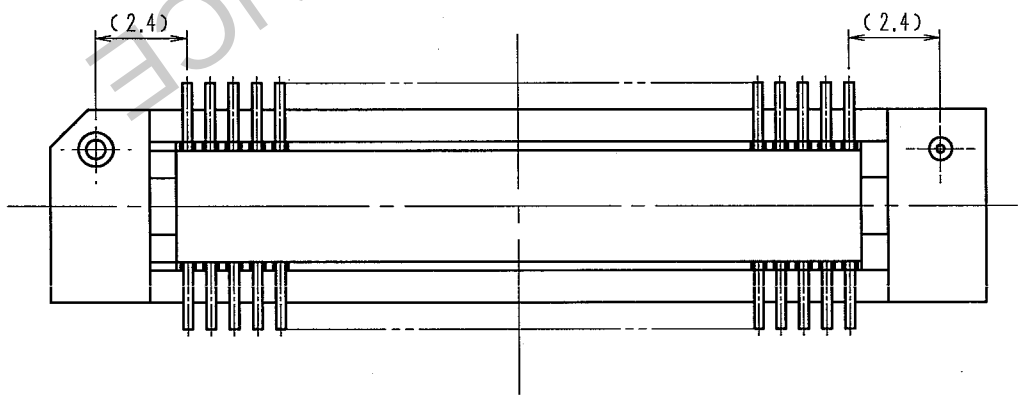

NOTE. 1.LEAD CO-PLANARITY SHALL BE 0.1mm MAX.
2.TUBE PACKAGING SHALL BE APPLIED FOR THIS PRODUCT.
SEE NEXT PAGE FOR DETAILS.
3.FOR MODIFICATION,ETC.,PREVENTIVE HOLE FOR SINK MARK MAY BE ADDED ACCORDING TO CIRCUMSTANCES.
4.THE DIMENSIONS IN PARENTHESES ARE FOR REFERENCE.

NO.	MATERIAL	FINISH, REMARKS	NO.	MATERIAL	FINISH, REMARKS
1	PPS	LIGHT BROWN (UL94V-0)	2	PHOSPHOR BRONZE	CONTACT AREA:GOLD 0.1μm min. LEAD AREA:TIN-PLATING 1μm min. UNDER PLATING:NICKEL 1μm min.

CODE NO.(OLD)	DRAWN	DESIGNED	CHECKED	APPROVED	RELEASED
CL	K.NAKAMURA 05.12.16	K.NAKAMURA 05.12.16	'05.12.16	'05.12.16	

SCALE 5 : 1 UNITS mm	DRAWING NO. EDC3-150831-21 HRS HIROSE ELECTRIC CO.,LTD.	PART NO. FX8C-60P-SV1(91) CODE NO. CL578-0521-6-91 1/2

TO
PCK

HRS DRAWING FOR REFERENCE

Feb.1.2018 Copyright 2018 HIROSE ELECTRIC CO., LTD. All Rights Reserved

	COUNT	DESCRIPTION OF REVISIONS	BY	CHKD	DATE		COUNT	DESCRIPTION OF REVISIONS	BY	CHKD	DATE
△					. .	△					. .
△					. .	△					. .
△					. .	△					. .

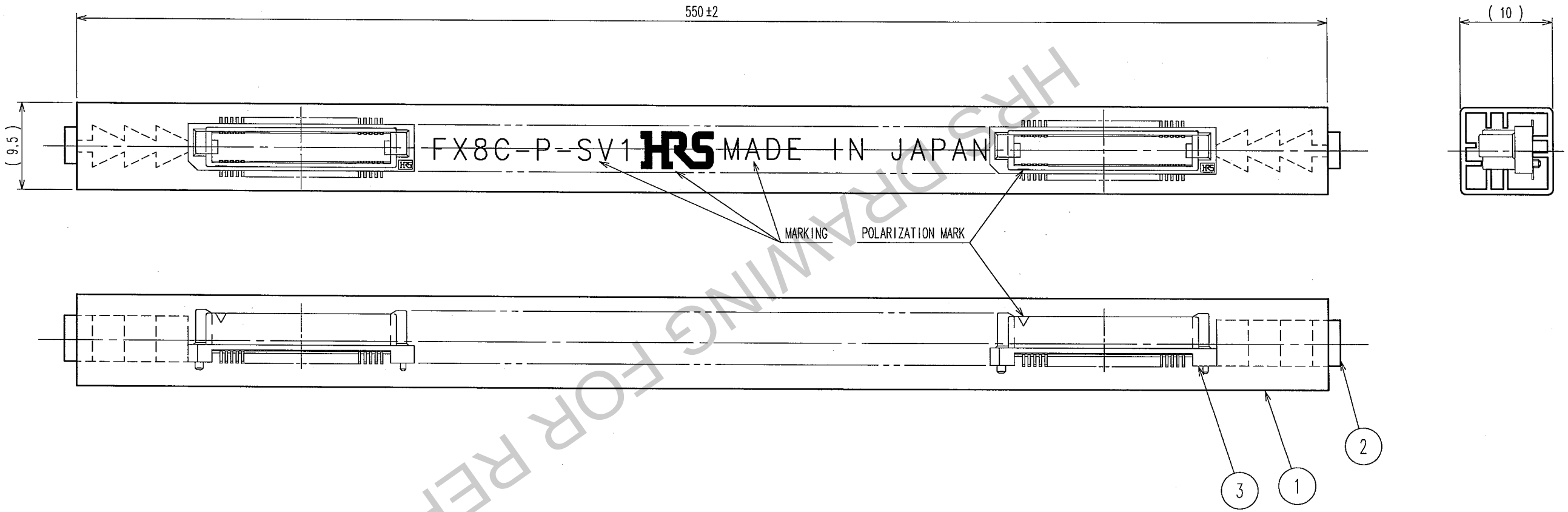

HRS DRAWING FOR REFERENCE

NOTE 1. 1 TUBE : 21 CONNECTORS.
2. THE DIMENSIONS IN PARENTHESES ARE FOR REFERENCE.

NO.	MATERIAL	FINISH, REMARKS
2	POLYVINYL CHLORIDE	(STOPPER)

NO.	MATERIAL	FINISH, REMARKS
3		(CONNECTOR)
1	POLYVINYL CHLORIDE	(TUBE)

CODE NO.(OLD)	DRAWN	DESIGNED	CHECKED	APPROVED	RELEASED
CL	K.NAKAMURA 05.12.16	K.NAKAMURA 05.12.16	K.Ogawa 05.12.16	H.Okawa 05.12.16	. .

SCALE FREE	DRAWING NO. EDC3-150831-21	PART NO. FX8C-60P-SV1(91)
UNITS mm	HRS HIROSE ELECTRIC CO., LTD	CODE NO. CL578-0521-6-91

2

TO
PCK