SMT power inductors

Size 12.5 x 12.5 x 8.5 mm

Series/Type: **B82477D4**
Ordering code:

Date: June 2013

© EPCOS AG 2015. Reproduction, publication and dissemination of this publication, enclosures hereto and the information contained therein without EPCOS' prior express consent is prohibited.

EPCOS AG is a TDK Group Company.

Rated inductance 2 ... 100µH

Construction

- Ferrite core
- Magnetically shielded
- Winding: enamel copper wire
- Winding soldered to terminals
- Special winding technology for low stray inductance and high coupling factor

Features

- High rated current, low DC resistance
- Temperature range up to +150 °C
- Suitable for lead-free reflow soldering as referenced in JEDEC J-STD 020D
- Qualified to AEC-Q200
- RoHS-compatible
- Coupling factor of typically 99% in average

Applications

- Common mode choke
- DC/DC converters, especially for SEPIC topology
- 1:1 transformer

Terminals

- Base material CuSn6P
- Layer composition Ni, Sn (lead-free)
- Electro-plated

Marking

- Marking on component:
  Manufacturer, L value (in µH), Date code
- Minimum data on reel:
  Manufacturer, ordering code, L value, quantity, date of packing

Delivery mode and packing unit

- 24-mm blister tape, wound on 330-mm ∅ reel
- Packing unit: 350 pcs./reel

Dimensional drawing and circuit diagram

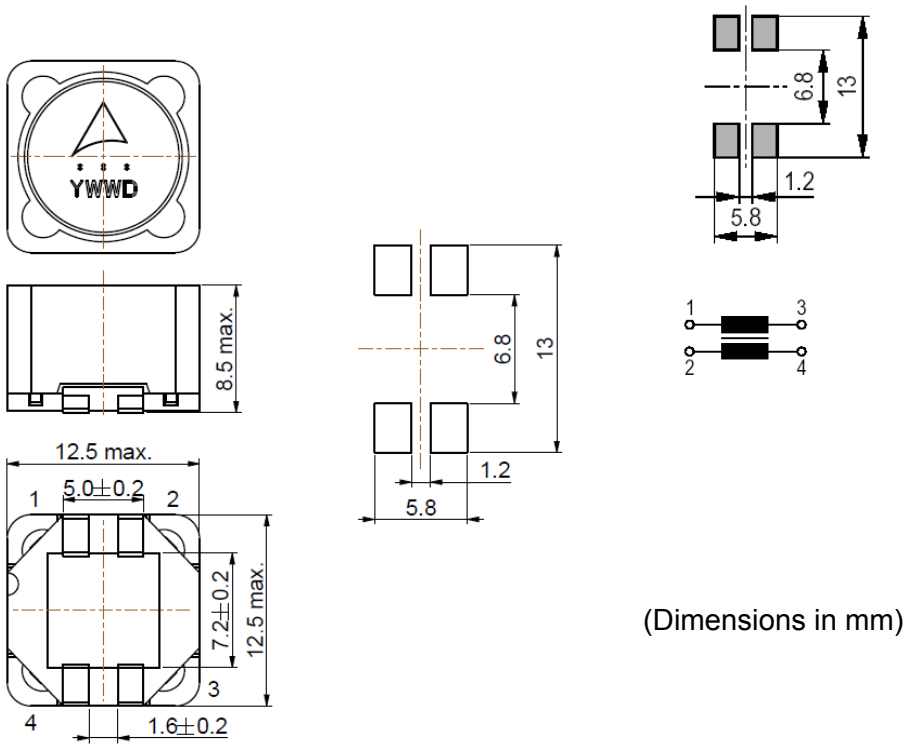

(Dimensions in mm)

Taping and packing

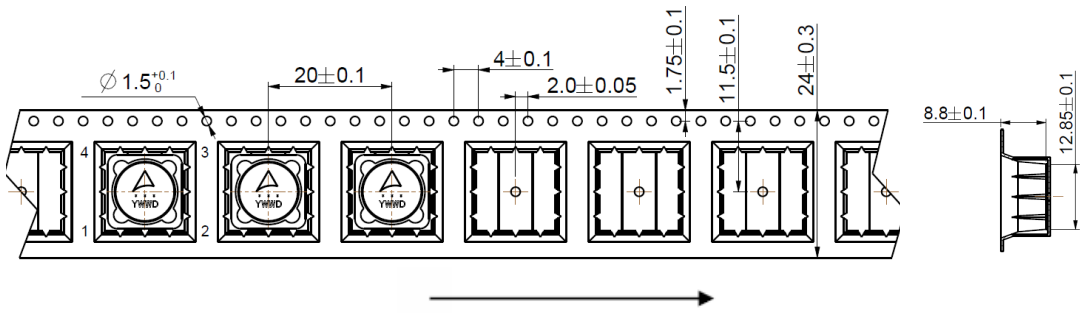

Direction of unreeling

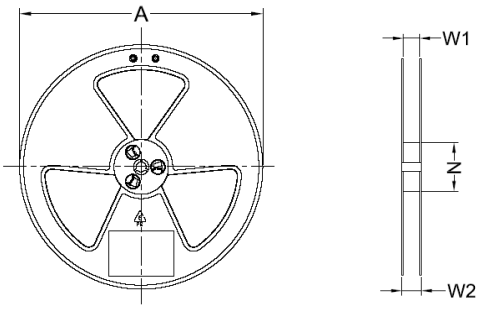

(Dimensions in mm)

A:330±2 N:75±1 W1:24.4 typ W2:30.4 max

Technical data and measuring conditions

Rated inductance L_1, L_2	Measured with LCR meter Agilent 4284A at frequency f_L, 0.1 V, +20 °C.
Leakage or stray inductance L_s	Test L_{1-3} :(short 2+4) .Measured with LCR meter Agilent 4284A at 100khz, 0.1 V, +20 °C.
Coupling factor K_{typ}	Coupling in between the 2 windings. $k = \sqrt{1 - \frac{Ls}{Ln}}$
Operating temperature range	–55°C to +150 °C
Rated current I_R	Max. permissible DC with temperature increase of ≤ 40 K
Saturation current I_{Sat}	DC with inductance decrease $\Delta L/L_0$ of approx. 10%
DC resistance R_1,R_2 , (max)	Measured at +20 °C
Solderability (lead-free)	Dip and look method Sn95.5Ag3.8Cu0.7: +(245 ±5) °C, (3 ±0.3) s Wetting of soldering area ≥ 90% (based on IEC 60068-2-58)
Resistance to soldering heat	+260 °C, 40 s (as referenced in JEDEC J-STD-020D)
Climatic category	55/150/56 (to IEC 60068-1)
Storage conditions	Mounted: –55 °C … +150 °C Packaged: –25 °C … +40 °C, ≤ 75% RH
Weight	Approx. 4.2 g

Characteristics and ordering codes

L_1, L_2 µH	$L_{s,typ}$ uH	$K_{,typ}$ %	Tolerance	f_L MHz	$I_{sat,typ}$ A	$I_{sat,min}$ A	I_R A	R_1, R_2/mΩ max	typ	Ordering code
2.0	0.20	94.9	±20% ≙ M	0.1	15	13	5.75	20	16.5	B82477D4202M000
3.0	0.25	95.7			12	10.25	5.50	22	18.1	B82477D4302M000
4.7	0.25	97.3			10	8.75	5.00	26	23.2	B82477D4472M000
6.8	0.25	98.1			8.25	7.25	4.15	35	28.5	B82477D4682M000
10	0.25	98.7			6.50	5.75	3.75	42	35.5	B82477D4103M000
15	0.30	99.0			5.50	4.80	3.25	60	52.5	B82477D4153M000
22	0.30	99.3			4.50	4.00	2.80	78	69.5	B82477D4223M000
33	0.35	99.5			3.80	3.30	2.30	110	96.4	B82477D4333M000
47	0.45	99.5			3.30	3.10	1.85	145	115	B82477D4473M000
68	0.50	99.6			2.50	2.30	1.55	215	190	B82477D4683M000
100	0.60	99.7			2.20	2.00	1.35	280	267	B82477D4104M000

Inductance is per winding. When leads are connected in parallel, inductance is the same value. When leads are connected in series, inductance is four times the value.
DCR is for each winding. When leads are connected in parallel, DCR is half the value. When leads are connected in series, DCR is twice the value.
Isat ist the current flowing through one winding. When leads are connected in parallel, Isat is the same. When leads are connected in series, Isat is half the value.
I_R is the total current through both windings
I_1 and I_2 can be calculated like this: $I_1^2+I_2^2=I_R^2$

Current derating I_{op}/I_R versus ambient temperature T_A

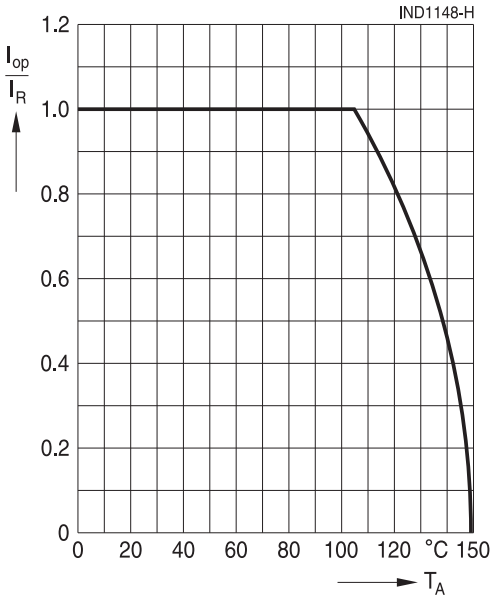

Cautions and warnings

- Please note the recommendations in our Inductors data book (latest edition) and in the data sheets.
  - Particular attention should be paid to the derating curves given there.
  - The soldering conditions should also be observed. Temperatures quoted in relation to wave soldering refer to the pin, not the housing.

- If the components are to be washed varnished it is necessary to check whether the washing varnish agent that is used has a negative effect on the wire insulation, any plastics that are used, or on glued joints. In particular, it is possible for washing varnish agent residues to have a negative effect in the long-term on wire insulation.

- The following points must be observed if the components are potted in customer applications:
  - Many potting materials shrink as they harden. They therefore exert a pressure on the plastic housing or core. This pressure can have a deleterious effect on electrical properties, and in extreme cases can damage the core or plastic housing mechanically.
  - It is necessary to check whether the potting material used attacks or destroys the wire insulation, plastics or glue.
  - The effect of the potting material can change the high-frequecy behaviour of the components.

- Ferrites are sensitive to direct impact. This can cause the core material to flake, or lead to breakage of the core.

- Even for customer-specific products, conclusive validation of the component in the circuit can only be carried out by the customer.

Important notes

The following applies to all products named in this publication:

1. Some parts of this publication contain **statements about the suitability of our products for certain areas of application**. These statements are based on our knowledge of typical requirements that are often placed on our products in the areas of application concerned. We nevertheless expressly point out **that such statements cannot be regarded as binding statements about the suitability of our products for a particular customer application.** As a rule, EPCOS is either unfamiliar with individual customer applications or less familiar with them than the customers themselves. For these reasons, it is always ultimately incumbent on the customer to check and decide whether an EPCOS product with the properties described in the product specification is suitable for use in a particular customer application.
2. We also point out that **in individual cases, a malfunction of electronic components or failure before the end of their usual service life cannot be completely ruled out in the current state of the art, even if they are operated as specified.** In customer applications requiring a very high level of operational safety and especially in customer applications in which the malfunction or failure of an electronic component could endanger human life or health (e.g. in accident prevention or life-saving systems), it must therefore be ensured by means of suitable design of the customer application or other action taken by the customer (e.g. installation of protective circuitry or redundancy) that no injury or damage is sustained by third parties in the event of malfunction or failure of an electronic component.
3. **The warnings, cautions and product-specific notes must be observed.**
4. In order to satisfy certain technical requirements, **some of the products described in this publication may contain substances subject to restrictions in certain jurisdictions (e.g. because they are classed as hazardous)**. Useful information on this will be found in our Material Data Sheets on the Internet (www.epcos.com/material). Should you have any more detailed questions, please contact our sales offices.
5. We constantly strive to improve our products. Consequently, **the products described in this publication may change from time to time**. The same is true of the corresponding product specifications. Please check therefore to what extent product descriptions and specifications contained in this publication are still applicable before or when you place an order. We also **reserve the right to discontinue production and delivery of products**. Consequently, we cannot guarantee that all products named in this publication will always be available. The aforementioned does not apply in the case of individual agreements deviating from the foregoing for customer-specific products.
6. Unless otherwise agreed in individual contracts, **all orders are subject to the current version of the "General Terms of Delivery for Products and Services in the Electrical Industry" published by the German Electrical and Electronics Industry Association (ZVEI)**.
7. The trade names EPCOS, BAOKE, Alu-X, CeraDiode, CeraLink, CSMP, CSSP, CTVS, DeltaCap, DigiSiMic, DSSP, FilterCap, FormFit, MiniBlue, MiniCell, MKD, MKK, MLSC, MotorCap, PCC, PhaseCap, PhaseCube, PhaseMod, PhiCap, SIFERRIT, SIFI, SIKOREL, SilverCap, SIMDAD, SiMic, SIMID, SineFormer, SIOV, SIP5D, SIP5K, ThermoFuse, WindCap are **trademarks registered or pending** in Europe and in other countries. Further information will be found on the Internet at www.epcos.com/trademarks.