THIS DRAWING IS UNPUBLISHED. RELEASED FOR PUBLICATION -,- .
© COPYRIGHT - BY TYCO ELECTRONICS CORPORATION. ALL RIGHTS RESERVED.

LOC	DIST
CM	00

REVISIONS

P	LTR	DESCRIPTION	DATE	DWN	APVD
	B1	REVISED PER ECO-07-001393	19JAN07	KW	DB

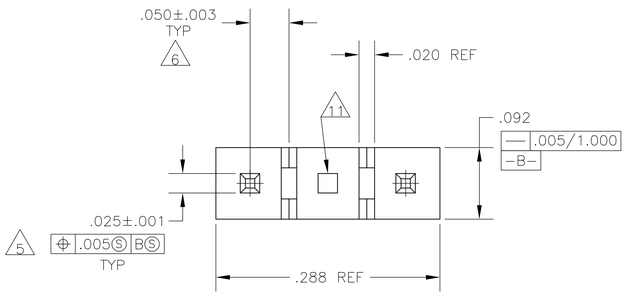

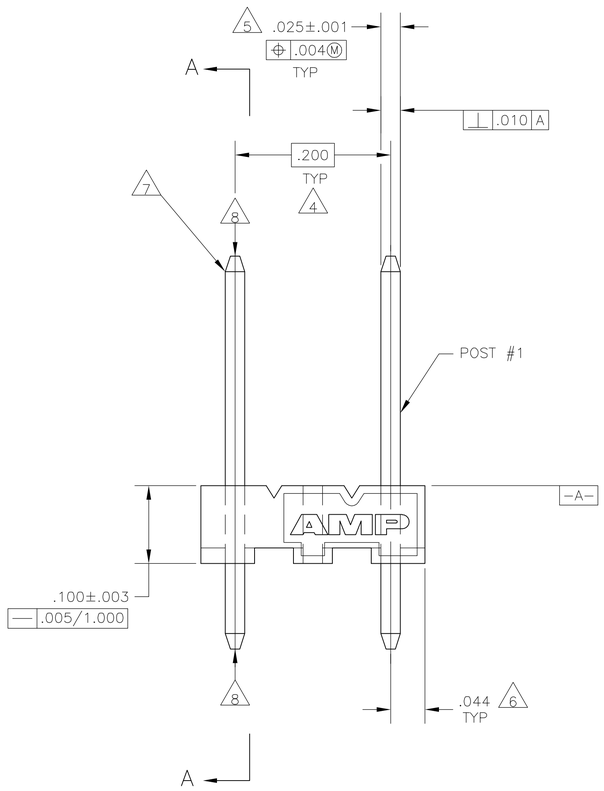

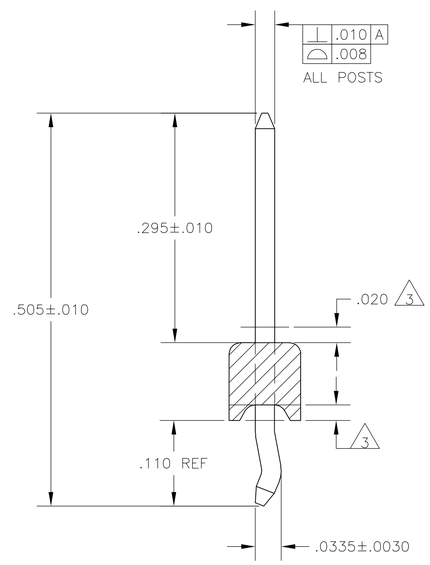

SECION A-A 10
RETENTIVE FEATURE IS FOR POSTS DESIGNATED IN TABLE ONLY

1. MATERIAL:
   BASE: THERMOPLASTIC POLYESTER,UL 94V-O (NATURAL).

   POST: COPPER ALLOY (TIN OR TIN-LEAD PLATED, .000150" MIN THICK - SEE PART NUMBER TABLE FOR DETAILS).
2. PARTS MUST COMPLY WITH AMP SOLDERABILITY SPEC 109-11-2.
3. PLASTIC AROUND POST PERMISSIBLE IN THIS AREA ONLY.
4. DIMENSION APPLIES WHEN HEADER IS HELD FLAT.
5. MEASURED AT -A-
6. COORDINATE DIMENSION APPLIES FROM CENTER OF ACTUAL FEATURE.
7. RADIUS AT TIP PERMITTED, BOTH ENDS.
8. POST MUST WITHSTAND 3.0 LB (13 NEWTONS) MIN AXIAL FORCE IN BOTH DIRECTIONS WITHOUT DISLODGING.
9. TOLERANCES APPLY TO SOLDER SIDE OF BOARD.
10. DIMENSION SHOULD BE .060 MIN WHEN MATING WITH A MTA-100 CONNECTOR ASSEMBLY OR A CST-100 CONNECTOR.
11. HOLE IN OMITTED POST LOCATION MAY NOT BE PRESENT.
12. AMP LOGO MAY OR MAY NOT APPEAR ON MOLDING HOUSING. 109-11-2.

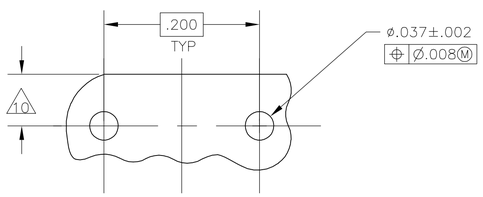

RECOMMENDED MOUNTING HOLE PATTERN FOR .063 THICK P. C. BOARD 9

.037	0.94	-	-
.0335	0.851	1.000	25.40
.025	0.64	.505	12.83
.020	0.51	.295	7.49
.010	0.25	.288	7.32
.008	0.20	.200	5.08
.005	0.13	.110	2.79
.004	0.10	.100	2.54
.003	0.08	.092	2.34
.002	0.05	.063	1.60
.0030	0.076	.060	1.52
.001	0.03	.050	1.27
.000150	0.0038	.044	1.12
IN	MM	IN	MM

CONVERSION TABLE

	FINISH	POSITION NO. OMITTED	RETENTIVE POSITIONS	PART NUMBER
	TIN	2	1,3	3-644748-1
SUPERSEDED BY 3-644748-1	TIN-LEAD	2	1,3	644748-1

THIS DRAWING IS A CONTROLLED DOCUMENT.

DIMENSIONS: INCHES

TOLERANCES UNLESS OTHERWISE SPECIFIED:
0 PLC ± -
1 PLC ± -
2 PLC ± -
3 PLC ± .005
4 PLC ± -
ANGLES ± -

MATERIAL 1 FINISH 1

METRIC

DWN B. VISEWARA 08JULY2005
CHK D. BOSSI 02AUG2005
APVD D. BOSSI 02AUG2005
PRODUCT SPEC —
APPLICATION SPEC —
WEIGHT —

tyco Electronics
Tyco Electronics Corporation
Harrisburg, Pa 17105-3608

NAME MTA-100 HEADER ASSEMBLY, NARROW .025 SQUARE STRAIGHT POST WITH RETENTIVE LEGS, TIN PLATED, 3 POSITION, OMITTED POST

SIZE A1 | CAGE CODE 00779 | DRAWING NO C-644748 | RESTRICTED TO —

CUSTOMER DRAWING | SCALE 10:1 | SHEET 1 OF 1 | REV B1