Alle Rechte vorbehalten/ *All rights reserved*

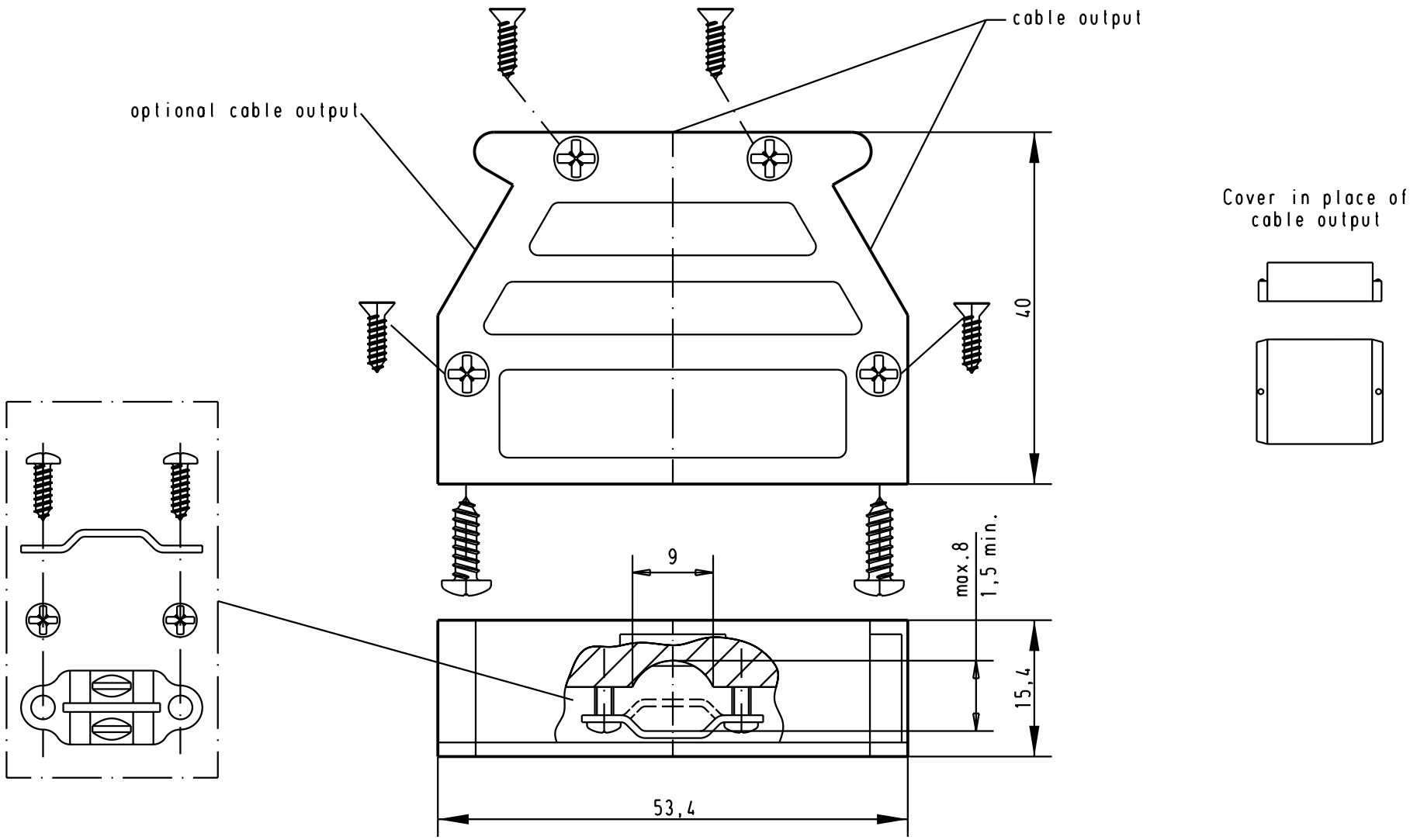

09 67 025 0453	Thermoplastic metallized			
09 67 025 0452	Thermoplastic black	29760	28-MAR-02	CV
Part number	Material	Mod.	Dat.	Name

	Dat.	Name
Detail.	28-MAR-02	CV
Insp.		
Stand.		

All Dim. in mm
Orig. Size DIN A 4

HARTING EURL
F-95972 Paris

D-Sub, Hood 25 poles
Top and side cable entry

Maßstab/ *Scale* 1.5:1

TB 0967025045x

Sub.

Blatt/ *Page* 1