THIS COPY IS PROVIDED ON A RESTRICTED BASIS AND IS NOT TO BE USED IN ANY WAY DETRIMENTAL TO THE INTERESTS OF PANDUIT CORP.

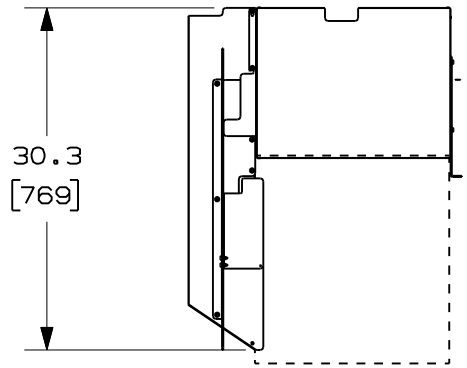

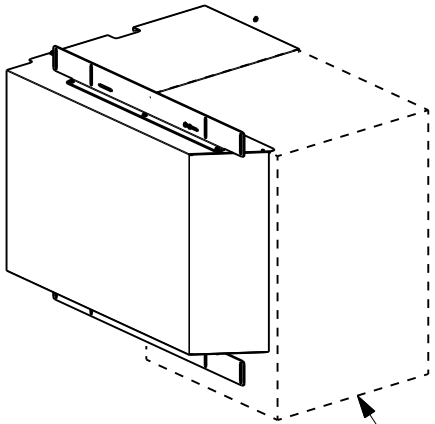

FRONT OF SWITCH
(FACES COLD AISLE)

PANDUIT PART NO.	WEIGHT
CNAE1	17.5 lbs/EACH 7.9 kg/EACH

NOTES:
1. VISIT OUR ON-LINE CATALOG AT WWW.PANDUIT.COM FOR A LIST OF CURRENT PARTS APPLICABLE FOR USE WITH THIS PRODUCT.
2. DIMENSIONS IN PARENTHESIS ARE METRIC (mm).
3. PARTS SUPPLIED:
   1- THERMAL DUCTING ASSEMBLY
   1- MOUNTING HARDWARE KIT
4. HIDDEN LINES REPRESENT SWITCH.
5. INSTALLATION NOTE:
   FRONT MOUNTING RAILS OF CABINET TO BE RECESSED 1.0" FROM FRONT BEAM. REAR MOUNTING RAILS OF CABINET TO BE SET 16.25" (412 mm) FROM FRONT RAILS.

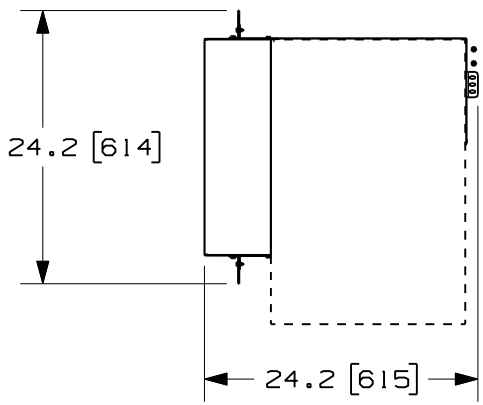

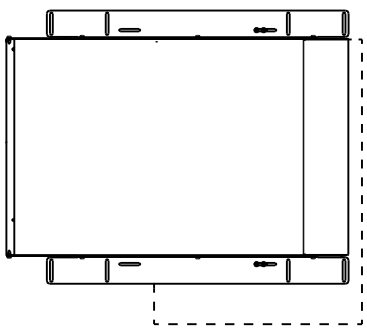

MODEL FILENAME: V10293YV_6509_DUCTING_ASSY_03.PRT

CAD FILENAME/LAYERS: V10293YV_DC_06A.PRT

PANDUIT CORP. TINLEY PARK, ILLINOIS

CNAE1 THERMAL DUCTING
CUSTOMER DRAWING

UNLESS OTHERWISE SPECIFIED, DIMENSIONAL TOLERANCES ARE:

INCHES		[METRIC - MILLIMETER]		ANGLE
X.X	+/- 0.03	X.	+/- 0.8	+/- 1°
X.XX	+/- 0.015	X.X	+/- 0.4	
X.XXX	+/- 0.005	X.XX	+/- 0.13	

UNLESS OTHERWISE SPECIFIED, ALL DIMENSIONS ARE GIVEN IN INCHES, THIRD ANGLE PROJECTION.

DRAWN BY: JDWE
DATE: 1-23-07
CHK'D:
MAT'L: SEE NOTES
SCALE: NONE
DRAWING NO.: 10293-158
SHEET 1 OF 3
DWG SIZE: A

REV	DATE	BY	CHK	DESCRIPTION	ECN - R	CUST	SUP	OTH
00	1-23-07	JDWE		RELEASED TO PRODUCTION	10293-158			

THIS COPY IS PROVIDED ON A RESTRICTED BASIS AND IS NOT TO BE USED IN ANY WAY DETRIMENTAL TO THE INTERESTS OF PANDUIT CORP.

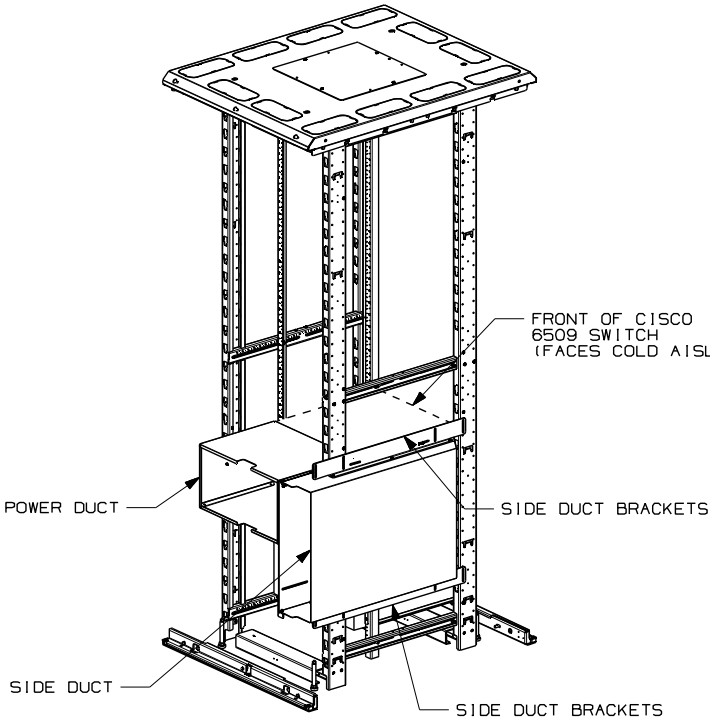

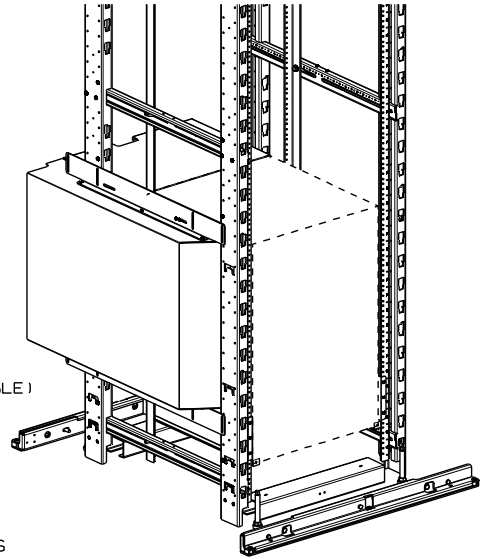

MODEL FILENAME: V10293YV_6509_DUCTING_ASSY_03.PRT

CAD FILENAME/LAYERS: V10293YV_DC_03A.PRT

PANDUIT CORP. TINLEY PARK, ILLINOIS

CNAE1 THERMAL DUCTING
CUSTOMER DRAWING

UNLESS OTHERWISE SPECIFIED, DIMENSIONAL TOLERANCES ARE:

INCHES		[METRIC - MILLIMETER]		ANGLE
X.X	+/- 0.03	X.	+/- 0.8	
X.XX	+/- 0.015	X.X	+/- 0.4	+/- 1°
X.XXX	+/- 0.005	X.XX	+/- 0.13	

UNLESS OTHERWISE SPECIFIED, ALL DIMENSIONS ARE GIVEN IN INCHES, THIRD ANGLE PROJECTION.

REV	DATE	BY	CHK	DESCRIPTION	ECN - R	CUST	SUP	OTH
00	1-23-07	JDWE		SEE SHEET 1 OF 3 FOR REVISIONS	10293-158			

DRAWN BY: JDWE

DATE: 1-23-07

CHK'D:

MAT'L: SEE NOTES

SCALE: NONE

DRAWING NO.: 10293-158 SHEET 2 OF 3

DWG SIZE: A

THIS COPY IS PROVIDED ON A RESTRICTED BASIS AND IS NOT TO BE USED IN ANY WAY DETRIMENTAL TO THE INTERESTS OF PANDUIT CORP.

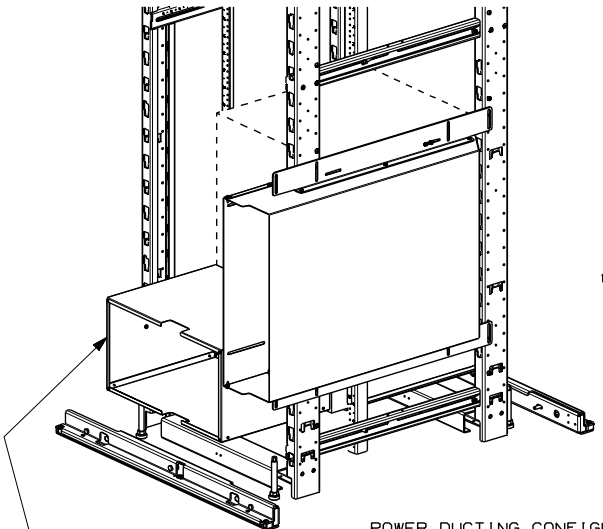

POWER DUCTING CONFIGURATION
FOR
CISCO 6509-E SWITCH

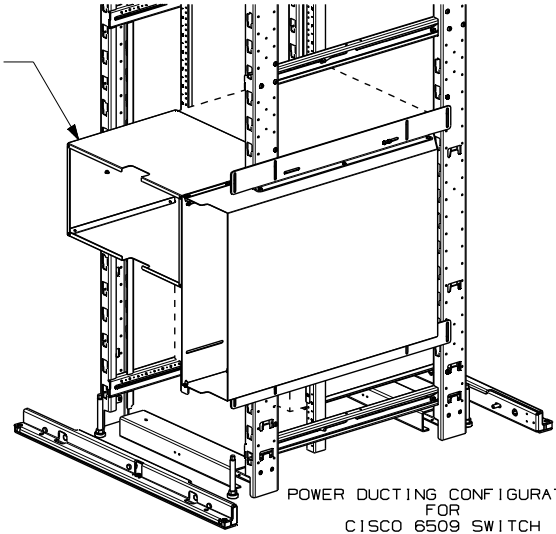

POWER DUCTING CONFIGURATION
FOR
CISCO 6509 SWITCH

MODEL FILENAME: V10293YV_6509_DUCTING_ASSY_03.PRT

CAD FILENAME/LAYERS: V10293YV_DC_03A.PRT

PANDUIT CORP. TINLEY PARK, ILLINOIS

CNAE1 THERMAL DUCTING
CUSTOMER DRAWING

UNLESS OTHERWISE SPECIFIED, DIMENSIONAL TOLERANCES ARE:

INCHES		[METRIC - MILLIMETER]		ANGLE
X.X	+/- 0.03	X.	+/- 0.8	+/- 1°
X.XX	+/- 0.015	X.X	+/- 0.4	
X.XXX	+/- 0.005	X.XX	+/- 0.13	

UNLESS OTHERWISE SPECIFIED,
ALL DIMENSIONS ARE GIVEN
IN INCHES, THIRD ANGLE PROJECTION.

REV	DATE	BY	CHK	DESCRIPTION	ECN - R	CUST	SUP	OTH
00	1-23-07	JDWE		SEE SHEET 1 OF 3 FOR REVISIONS	10293-158			

DRAWN BY: JDWE

DATE: 1-23-07

CHK'D:

MAT'L: SEE NOTES

SCALE: NONE

DRAWING NO.: 10293-158 SHEET 3 OF 3

DWG SIZE: A