REFERENCE SPECIFICATIONS

-NFC 93425 (in compliance with HE 507)

PHYSICAL CHARACTERISTICS

-INSULATOR MATERIAL: THERMOPLASTIC UL94V0

-CONTACT MATERIAL: PHOSPHOR BRONZE(SIGNAL CONTACT)

BRASS (POWERS CONTACT)

-ACCESSORIES: BRASS

-SHELLS: STEEL

ELECTRICAL CHARACTERISTICS

-NOMINAL CURRENT: 7.5A (SIGNAL CONTACT)

30A or 40A (POWER CONTACT)

-CONTACT RESISTANCE: <=7.3 m Ohms(SIGNAL and POWER)

-CONTACT/CONTACT : >=1000 V

-CONTACT/GROUND : >=1200 V

-INSULATION RESISTANCE: >=5000 MOhms

ENVIRONMENTAL CHARACTERISTICS

- CLIMATIC CATEGORY: 55/125/21

TEMPERATURE RANGE -55°C TO +125°C

DAMP HEAT STEADY STATE 21 DAYS

SALT SPRAY 48 HOURS

MECHANICAL CHARACTERISTICS

- RETENTION AGAINST TORQUE: - Threaded insert: 0.7 N.m minimum

- Female screw : 0.5 N.m minimum

NOTE RoHS INFORMATION

- The "LF" products meet european union Directives and other country regulations as described in GS-22-008.
- The housing will whistand exposure to 260°C peak temperature for 3.5 seconds in a wave solder application with a 1.6mm minimum thick circuit board. See application notes/procedures if they are available.
- Termination plating spec:
  - Signal contacts: Ni + Gold
  - Power contacts: Ni 1.27µmi+Sn 2.5 to 7.5µ,pure bright
- Active area plating spec:
  - Signal and power contacts: Ni + Gold
- Shell plating :2 to 4µm Cu + nickel + 3 to 10µmm Sn,pure bright
- Accessories: Sn pure bright + nickel
- Packaging spec: See GS-14-920

DBL13W3S500G30LF

Series

Shell size: **E A B C D** (see sheet 3)

Front accessory definition (see sheet 2)

blank: without accessory
L :threaded insert M3
O :threaded insert UNC 4-40
V :female screw UNC 4-40

Layout of contacts (see sheet 3)

Contacts
S :Socket

Termination type
5 Right angle/Europe standard

Plating
00 200 matings/unmatings
43 500 matings/unmatings

PCB accessories definition(see sheet 2)
A :without accessory
H :Metal brackets+harpoons for PCB 2.40mm
G :Metal brackets+harpoons for PCB 1.60mm
M :Metal brackets

Power contacts
00 :Not fitted with power contact (signal contacts always fitted)
30 :Fitted with power contacts 30 Amp.
40 :Fitted with power contacts 40 Amp.

See note RoHS

TABLE 1:PCB HOLE DIAMETERS

	POWER CONTACTS		ACCESSORIES	SIGNAL CONTACT
30 A	2.00	Ø2.40	Ø3.10	Ø0.9 min
40 A	2.80	Ø3.10		
Max current power	ØA +0.1 0	PCB HOLE ±0.1	PCB HOLE ±0.1	PCB HOLE

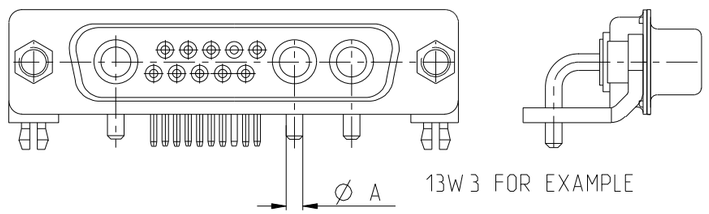

rev	ecn no	dr	date
A	LS05-0101	MPE	2005-10-11
B	LS06-0208	LGO	2006-12-12
C	LS07-0273	MPE	2007/10/31
D	F09-0092	LSA	2009/09/16
E	F10-0060	LSA	2010/06/01
-	-	-	-
-	-	-	-

www.fciconnect.com

Dr	M PESSON	2005-10-11
Eng	P LEGARE	2005-10-11
Chr		
Appr		

surface - ISO 1302 ✓ | tolerance std ISO 406 ISO 1101 | projection | mm

TOLERANCES UNLESS OTHERWISE SPECIFIED

ANGULAR 0° ±2° | LINEAR 0.X ±0.3, 0.XX ±0.1, 0.XXX ±0.05 | size A2 | Scale 2:1

ECN F10-0060

Product family - | Spec ref

title: SUB FEMALE DMW EUROPE
mixed power right angled solder

dwg no: C01-8639-2300 | Rev. E

catalog no - | CUSTOMER | sheet 1 of 7

Copyright FCI.

REV E - 2006-03-28

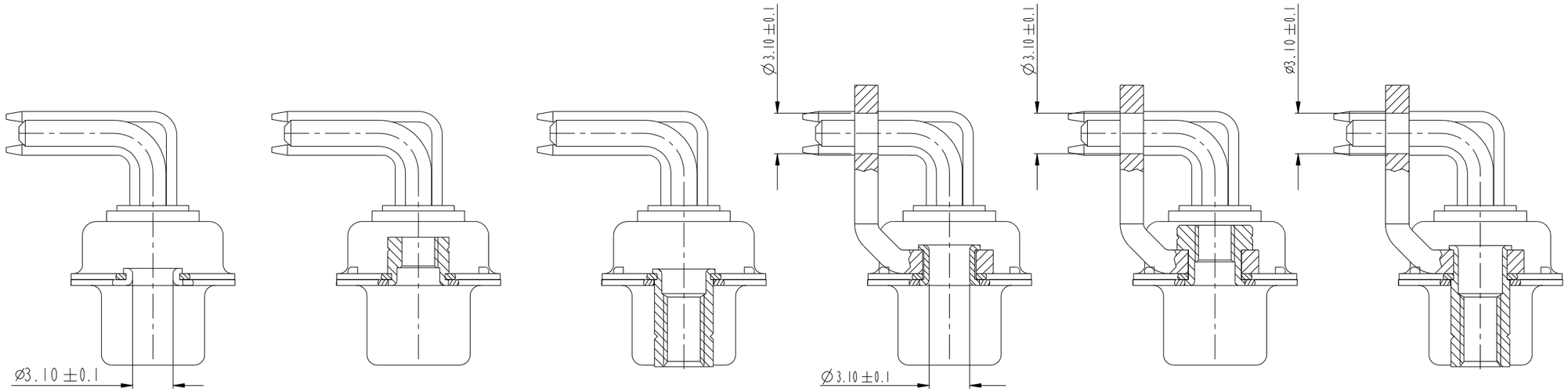

FRONT ACCESSORY	**Blank** Without	**L** insert M3 **O** insert UNC 4.40	**V** insert UNC 4.40	**Blank** Without	**L** insert M3 **O** insert UNC 4.40	**V** insert UNC 4.40
PCB ACCESSORIES	**A** Without	**A** Without	**A** Without	**M** Metal brackets	**M** Metal brackets	**M** Metal bracket

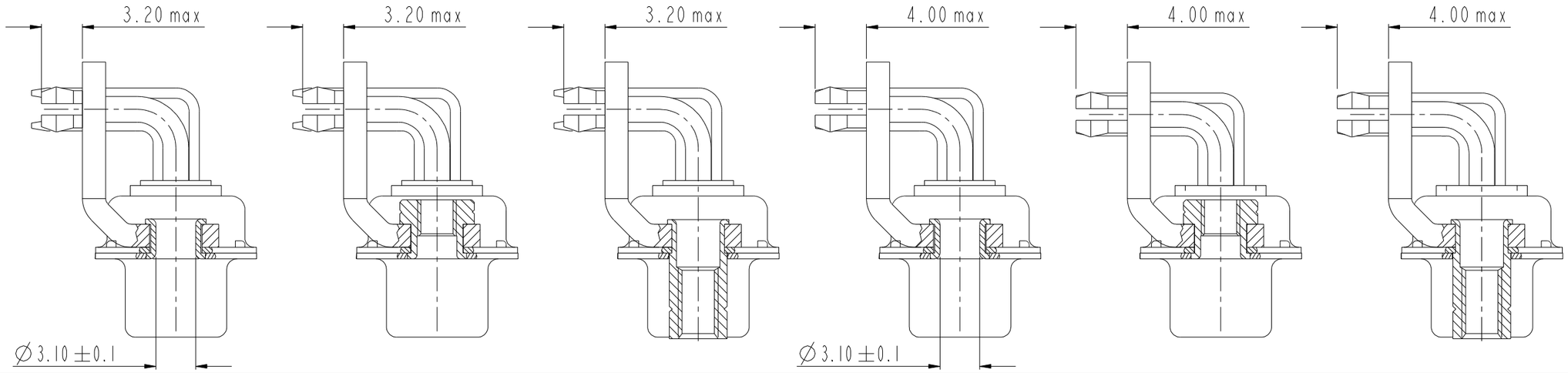

FRONT ACCESSORY	**Blank** Without	**L** insert M3 **O** insert UNC 4.40	**V** insert UNC 4.40	**Blank** Without	**L** insert M3 **O** insert UNC 4.40	**V** insert UNC 4.40
PCB ACCESSORIES	**G** Metal brackets + harpoons for PCB 1.60mm	**G** Metal brackets + harpoons for PCB 1.60mm	**G** Metal brackets + harpoons for PCB 1.60mm	**H** Metal brackets + harpoons for PCB 2.40mm	**H** Metal brackets + harpoons for PCB 2.40mm	**H** Metal brackets + harpoons for PCB 2.40mm

Copyright FCI.

SCALE: 4

www.fciconnect.com			surface - ISO 1302	tolerance std ISO 406 ISO 1101	projection	mm
			TOLERANCES UNLESS OTHERWISE SPECIFIED			
Dr	M PESSON	2005-10-11	ANGULAR	LINEAR 0.X ±0.3	size A2	Scale 2:1
Eng	P LEGARE	2005-10-11		0.XX ±0.1		
Chr			0° ±2°	0.XXX ±0.05	ECN	F10-0060
Appr			Product family -		Spec ref	
title	SUB FEMALE DMW EUROPE mixed power right angled solder				dwg no C01-8639-2300	Rev. E
catalog no -					CUSTOMER	sheet 2 of 7

REV E - 2006-03-28

PART NUMBER	AMPS	MATINGS/ UNMATINGS	FRONT ACCESSORY	PCB ACCESSORIES
D*xWxS500A30LF	30	200	without	without
D*LxWxS500A30LF	30	200	insert M3	without
D*OxWxS500A30LF	30	200	insert UNC 4.40	without
D*VxWxS500A30LF	30	200	female screw UNC 4.40	without
D*xWxS500H30LF	30	200	without	metal bracket+harpoon PCB 2.40mm
D*LxWxS500H30LF	30	200	insert M3	metal bracket+harpoon PCB 2.40mm
D*OxWxS500H30LF	30	200	insert UNC 4.40	metal bracket+harpoon PCB 2.40mm
D*VxWxS500H30LF	30	200	female screw UNC 4.40	metal bracket+harpoon PCB 2.40mm
D*xWxS500G30LF	30	200	without	metal bracket+harpoon PCB 1.60mm
D*LxWxS500G30LF	30	200	insert M3	metal bracket+harpoon PCB 1.60mm
D*OxWxS500G30LF	30	200	insert UNC 4.40	metal bracket+harpoon PCB 1.60mm
D*VxWxS500G30LF	30	200	female screw UNC 4.40	metal bracket+harpoon PCB 1.60mm
D*xWxS500M30LF	30	200	without	metal bracket
D*LxWxS500M30LF	30	200	insert M3	metal bracket
D*OxWxS500M30LF	30	200	insert UNC 4.40	metal bracket
D*VxWxS500M30LF	30	200	female screw UNC 4.40	metal bracket

PART NUMBER	AMPS	MATINGS/ UNMATINGS	FRONT ACCESSORY	PCB ACCESSORIES
D*xWxS500A40LF	40	200	without	without
D*LxWxS500A40LF	40	200	insert M3	without
D*OxWxS500A40LF	40	200	insert UNC 4.40	without
D*VxWxS500A40LF	40	200	female screw UNC 4.40	without
D*xWxS500H40LF	40	200	without	metal bracket+harpoon PCB 2.40mm
D*LxWxS500H40LF	40	200	insert M3	metal bracket+harpoon PCB 2.40mm
D*OxWxS500H40LF	40	200	insert UNC 4.40	metal bracket+harpoon PCB 2.40mm
D*VxWxS500H40LF	40	200	female screw UNC 4.40	metal bracket+harpoon PCB 2.40mm
D*xWxS500G40LF	40	200	without	metal bracket+harpoon PCB 1.60mm
D*LxWxS500G40LF	40	200	insert M3	metal bracket+harpoon PCB 1.60mm
D*OxWxS500G40LF	40	200	insert UNC 4.40	metal bracket+harpoon PCB 1.60mm
D*VxWxS500G40LF	40	200	female screw UNC 4.40	metal bracket+harpoon PCB 1.60mm
D*xWxS500M40LF	40	200	without	metal bracket
D*LxWxS500M40LF	40	200	insert M3	metal bracket
D*OxWxS500M40LF	40	200	insert UNC 4.40	metal bracket
D*VxWxS500M40LF	40	200	female screw UNC 4.40	metal bracket

shell size *	LAYOUTS xWx
E	5W1
A	11W1
A	7W2
B	21W1
B	17W2
B	13W3
B	9W4
C	25W3
C	21WA4
C	27W2
D	24W7

PART NUMBER	AMPS	MATINGS/ UNMATINGS	FRONT ACCESSORY	PCB ACCESSORIES
D*xWxS543A30LF	30	500	without	without
D*LxWxS543A30LF	30	500	insert M3	without
D*OxWxS543A30LF	30	500	insert UNC 4.40	without
D*VxWxS543A30LF	30	500	female screw UNC 4.40	without
D*xWxS543H30LF	30	500	without	metal bracket+harpoon PCB 2.40mm
D*LxWxS543H30LF	30	500	insert M3	metal bracket+harpoon PCB 2.40mm
D*OxWxS543H30LF	30	500	insert UNC 4.40	metal bracket+harpoon PCB 2.40mm
D*VxWxS543H30LF	30	500	female screw UNC 4.40	metal bracket+harpoon PCB 2.40mm
D*xWxS543G30LF	30	500	without	metal bracket+harpoon PCB 1.60mm
D*LxWxS543G30LF	30	500	insert M3	metal bracket+harpoon PCB 1.60mm
D*OxWxS543G30LF	30	500	insert UNC 4.40	metal bracket+harpoon PCB 1.60mm
D*VxWxS543G30LF	30	500	female screw UNC 4.40	metal bracket+harpoon PCB 1.60mm
D*xWxS543M30LF	30	500	without	metal bracket
D*LxWxS543M30LF	30	500	insert M3	metal bracket
D*OxWxS543M30LF	30	500	insert UNC 4.40	metal bracket
D*VxWxS543M30LF	30	500	female screw UNC 4.40	metal bracket

PART NUMBER	AMPS	MATINGS/ UNMATINGS	FRONT ACCESSORY	PCB ACCESSORIES
D*xWxS543A40LF	40	500	without	without
D*LxWxS543A40LF	40	500	insert M3	without
D*OxWxS543A40LF	40	500	insert UNC 4.40	without
D*VxWxS543A40LF	40	500	female screw UNC 4.40	without
D*xWxS543H40LF	40	500	without	metal bracket+harpoon PCB 2.40mm
D*LxWxS543H40LF	40	500	insert M3	metal bracket+harpoon PCB 2.40mm
D*OxWxS543H40LF	40	500	insert UNC 4.40	metal bracket+harpoon PCB 2.40mm
D*VxWxS543H40LF	40	500	female screw UNC 4.40	metal bracket+harpoon PCB 2.40mm
D*xWxS543G40LF	40	500	without	metal bracket+harpoon PCB 1.60mm
D*LxWxS543G40LF	40	500	insert M3	metal bracket+harpoon PCB 1.60mm
D*OxWxS543G40LF	40	500	insert UNC 4.40	metal bracket+harpoon PCB 1.60mm
D*VxWxS543G40LF	40	500	female screw UNC 4.40	metal bracket+harpoon PCB 1.60mm
D*xWxS543M40LF	40	500	without	metal bracket
D*LxWxS543M40LF	40	500	insert M3	metal bracket
D*OxWxS543M40LF	40	500	insert UNC 4.40	metal bracket
D*VxWxS543M40LF	40	500	female screw UNC 4.40	metal bracket

Copyright FCI.

www.fciconnect.com

surface - ISO 1302 | tolerance std ISO 406 ISO 1101 | projection | mm

TOLERANCES UNLESS OTHERWISE SPECIFIED

Dr	M PESSON	2005-10-11	ANGULAR	LINEAR	0.X	±0.3	size A2
Eng	P LEGARE	2005-10-11			0.XX	±0.1	Scale 2:1
Chr			0° ±2°		0.XXX	±0.05	ECN F10-0060
Appr			Product family -				Spec ref

title: SUB FEMALE DMW EUROPE
mixed power right angled solder

dwg no: C01-8639-2300 | Rev. E

catalog no - | CUSTOMER | sheet 3 of 7

REV E - 2006-03-28

PDM: Rev:E STATUS: Released Printed: Oct 01, 2010

5W1

LAYOUT AND CONNECTOR DIMENSIONS

For PCB hole diameters see table 1 sheet 1

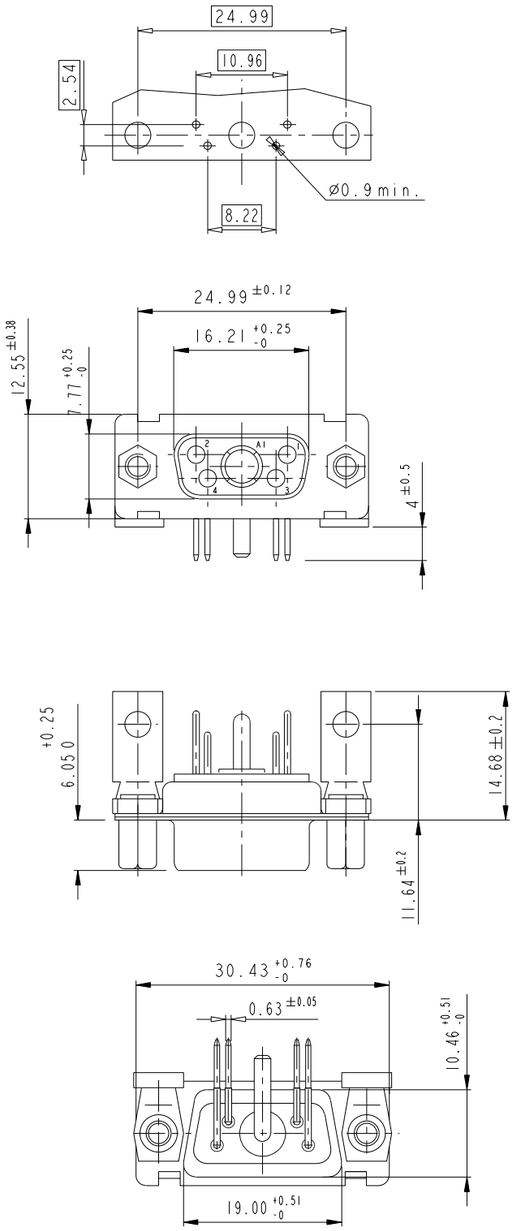

Floating signal contacts

11W1

LAYOUT AND CONNECTOR DIMENSIONS

For PCB hole diameters see table 1 sheet 1

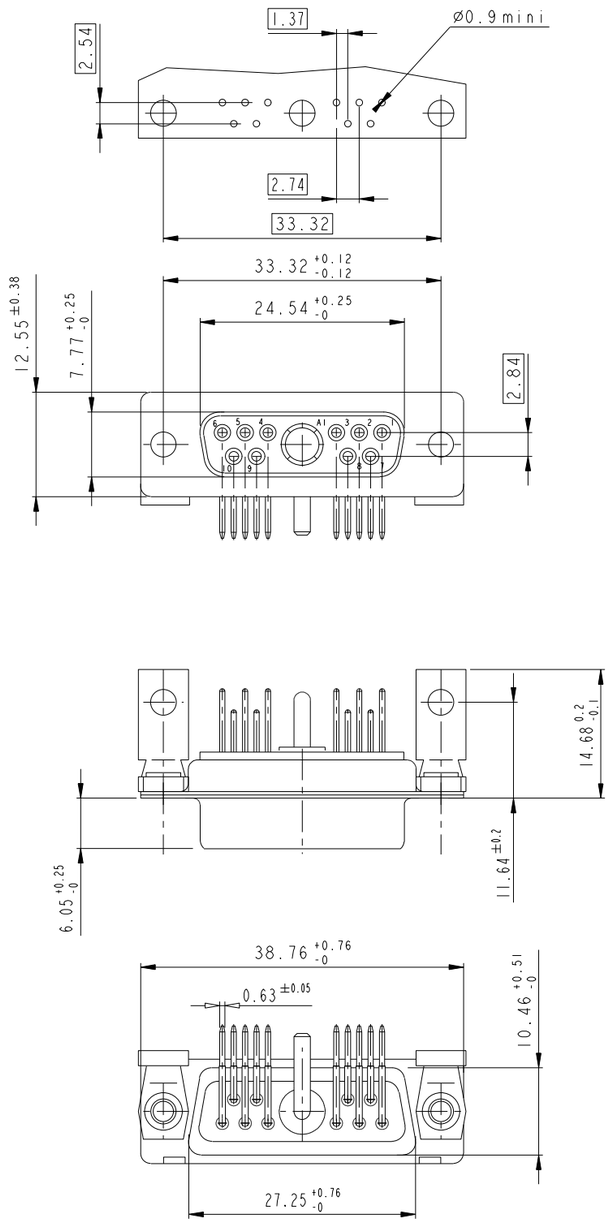

7W2

LAYOUT AND CONNECTOR DIMENSIONS

For PCB hole diameters see table 1 sheet 1

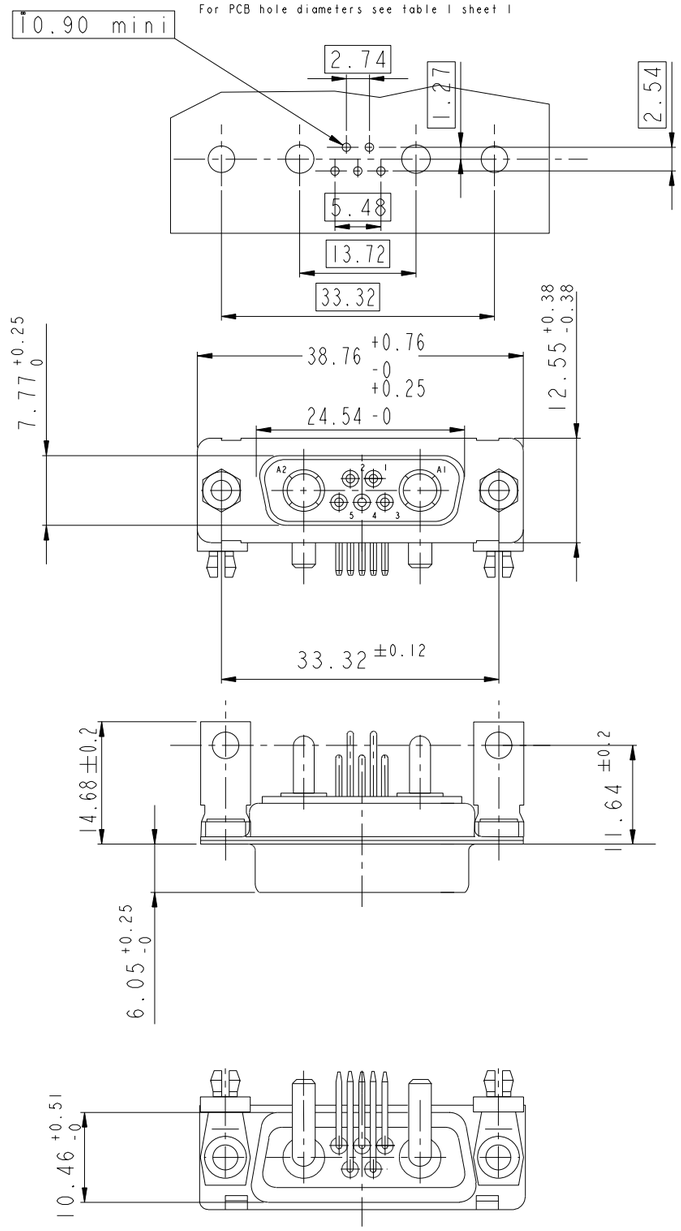

SIDE VIEW FOR ALL LAYOUTS
(except size D)

VIEW WITHOUT POWERS CONTACTS

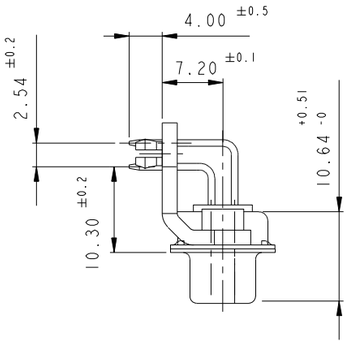

VIEW WITH POWERS CONTACTS

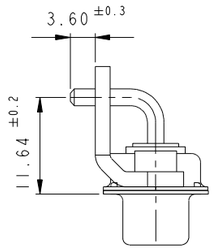

www.fciconnect.com			surface - ISO 1302		tolerance std ISO 406 ISO 1101		projection	mm
			TOLERANCES UNLESS OTHERWISE SPECIFIED					
Dr	M PESSON	2005-10-11	ANGULAR	LINEAR	0.X	±0.3	size A2	Scale 2:1
Eng	P LEGARE	2005-10-11			0.XX	±0.1		
Chr			0° ±2°		0.XXX	±0.05	ECN	F10-0060
Appr			Product family -				Spec ref	
title	SUB FEMALE DMW EUROPE mixed power right angled solder				dwg no	C01-8639-2300		Rev. E
catalog no -					CUSTOMER		sheet 4 of 7	

Copyright FCI.

REV E - 2006-03-28

13W3

LAYOUT AND CONNECTOR DIMENSIONS

For PCB hole diameters see table 1 sheet 1

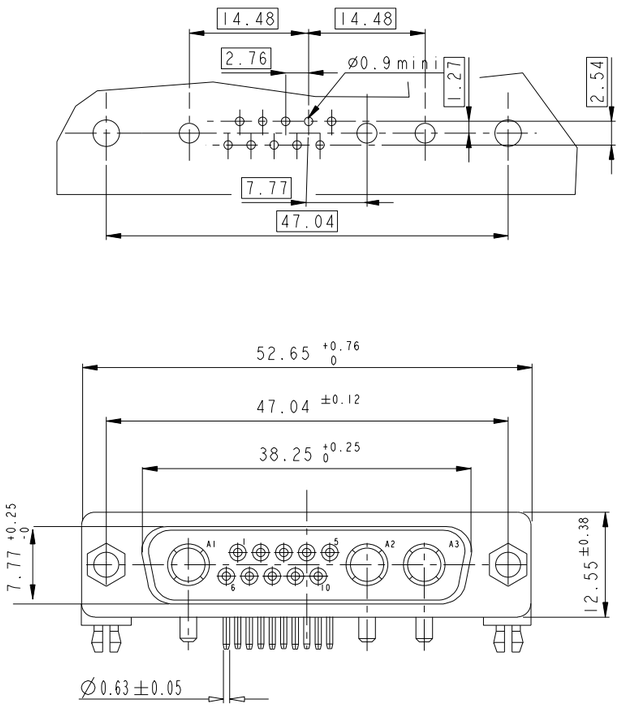

9W4

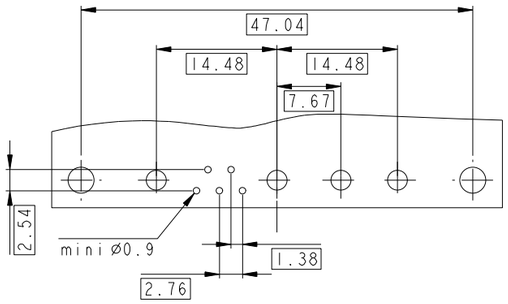

LAYOUT AND CONNECTOR DIMENSIONS

For PCB hole diameters see table 1 sheet 1

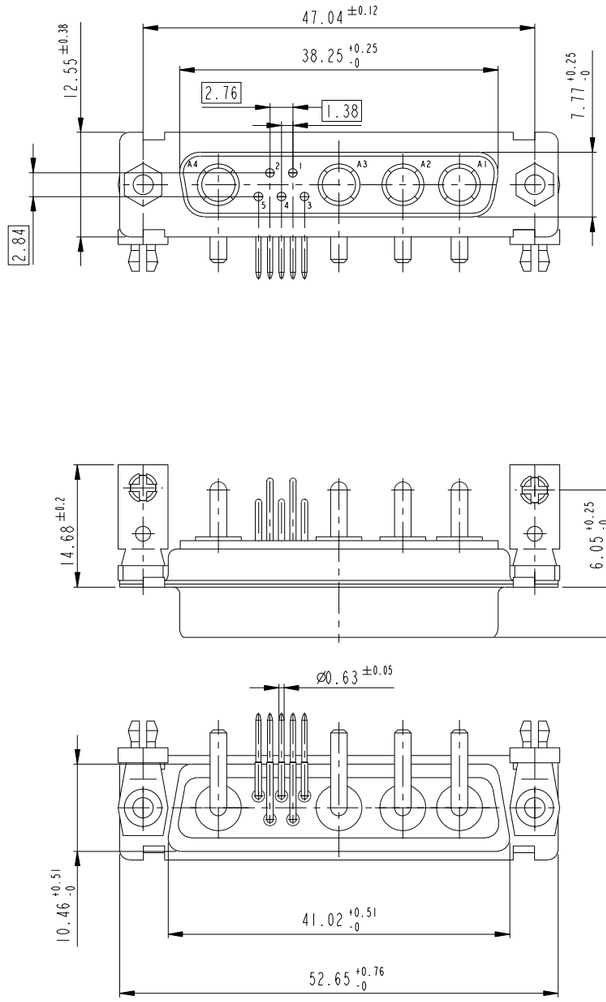

Floating signal contacts

17W2

LAYOUT AND CONNECTOR DIMENSIONS

For PCB hole diameters see table 1 sheet 1

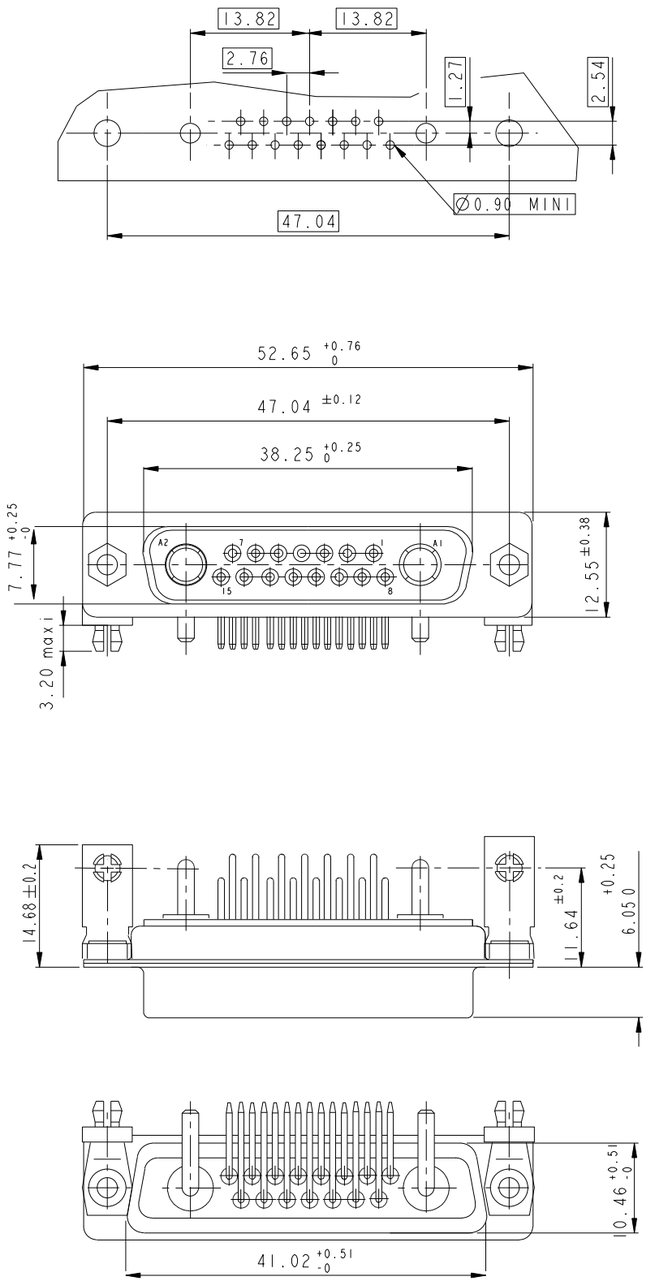

www.fciconnect.com			surface ISO 1302		tolerance std ISO 406 ISO 1101		projection	mm
			TOLERANCES UNLESS OTHERWISE SPECIFIED					
Dr	M PESSON	2005-10-11	ANGULAR	LINEAR	0.X	±0.3	size A2	Scale 2:1
Eng	P LEGARE	2005-10-11			0.XX	±0.1		
Chr			0° ±2°		0.XXX	±0.05	ECN	F10-0060
Appr			Product family			-	Spec ref	
title	SUB FEMALE DMW EUROPE mixed power right angled solder				dwg no	C01-8639-2300		Rev. E
catalog no	-				CUSTOMER		sheet 5 of 7	

Copyright FCI.

REV E - 2006-03-28

21W1

LAYOUT AND CONNECTOR DIMENSIONS

For PCB hole diameters see table 1 sheet 1

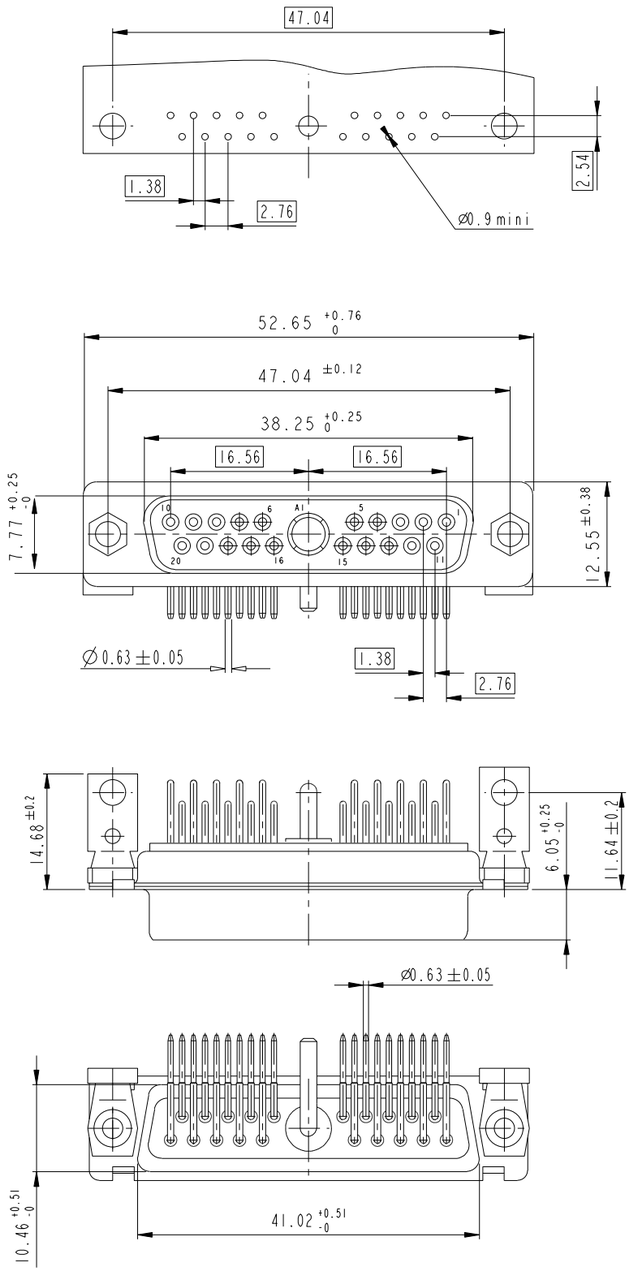

27W2

LAYOUT AND CONNECTOR DIMENSIONS

For PCB hole diameters see table 1 sheet 1

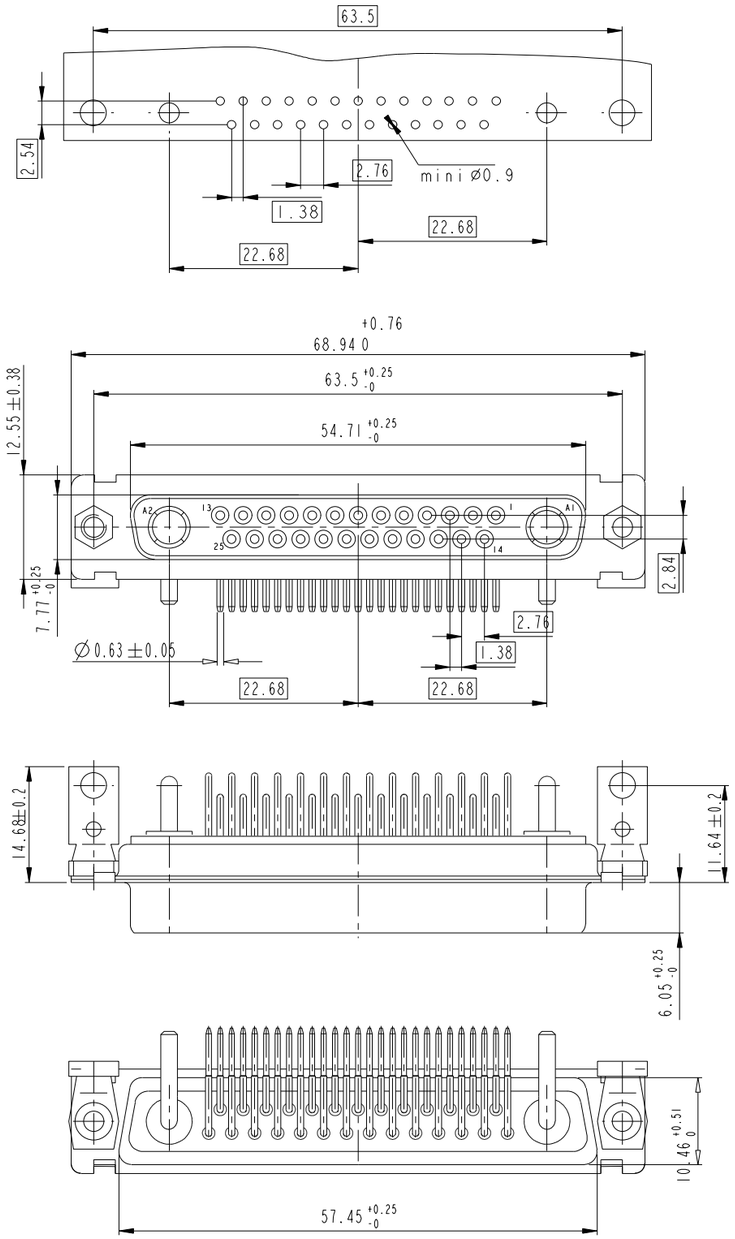

Copyright FCI.

www.fciconnect.com			surface - ISO 1302		tolerance std ISO 406 ISO 1101		projection	mm
			TOLERANCES UNLESS OTHERWISE SPECIFIED					
Dr	M PESSON	2005-10-11	ANGULAR	LINEAR	0.X	±0.3	size A2	Scale 2:1
Eng	P LEGARE	2005-10-11			0.XX	±0.1		
Chr			0° ±2°		0.XXX	±0.05	ECN	F10-0060
Appr			Product family -				Spec ref	
title	SUB FEMALE DMW EUROPE mixed power right angled solder				dwg no	C01-8639-2300		Rev. E
catalog no -					CUSTOMER		sheet 6 of 7	

REV E - 2006-03-28

PDM: Rev:E STATUS: Released Printed: Oct 01, 2010

21W A4

LAYOUT AND CONNECTOR DIMENSIONS

For PCB hole diameters see table 1 sheet 1

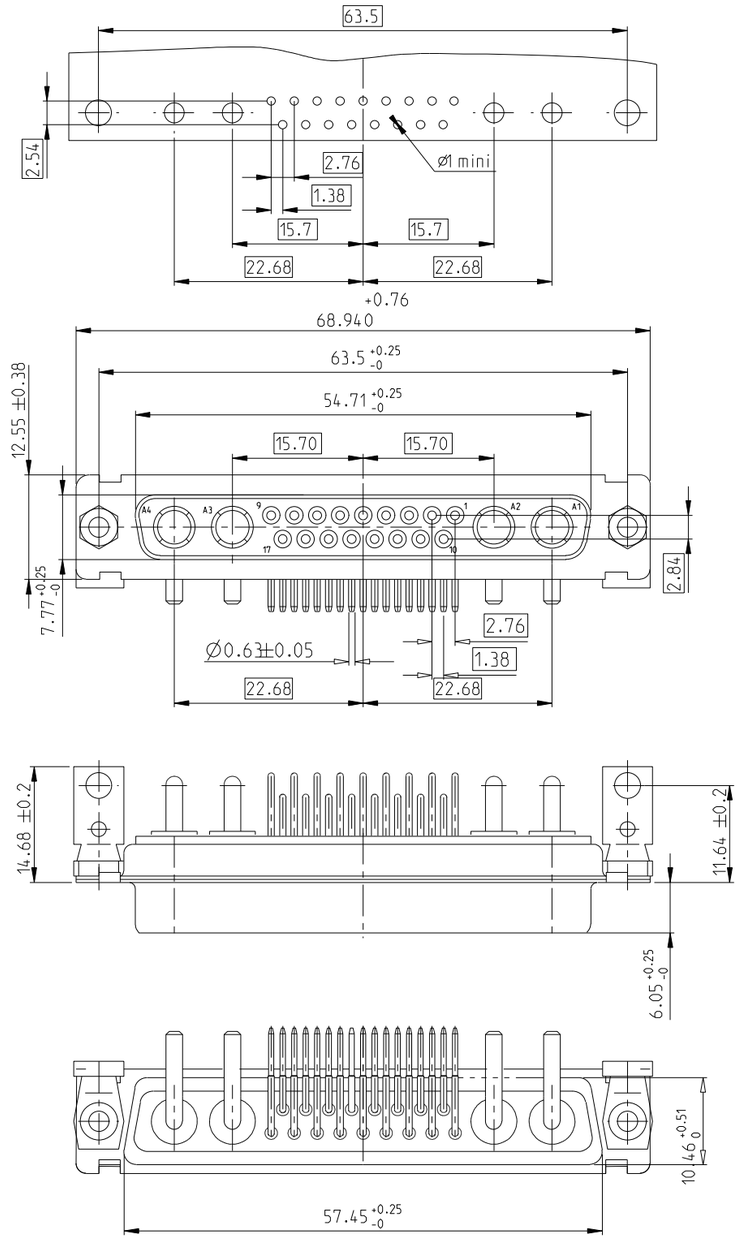

25W 3

LAYOUT AND CONNECTOR DIMENSIONS

For PCB hole diameters see table 1 sheet 1

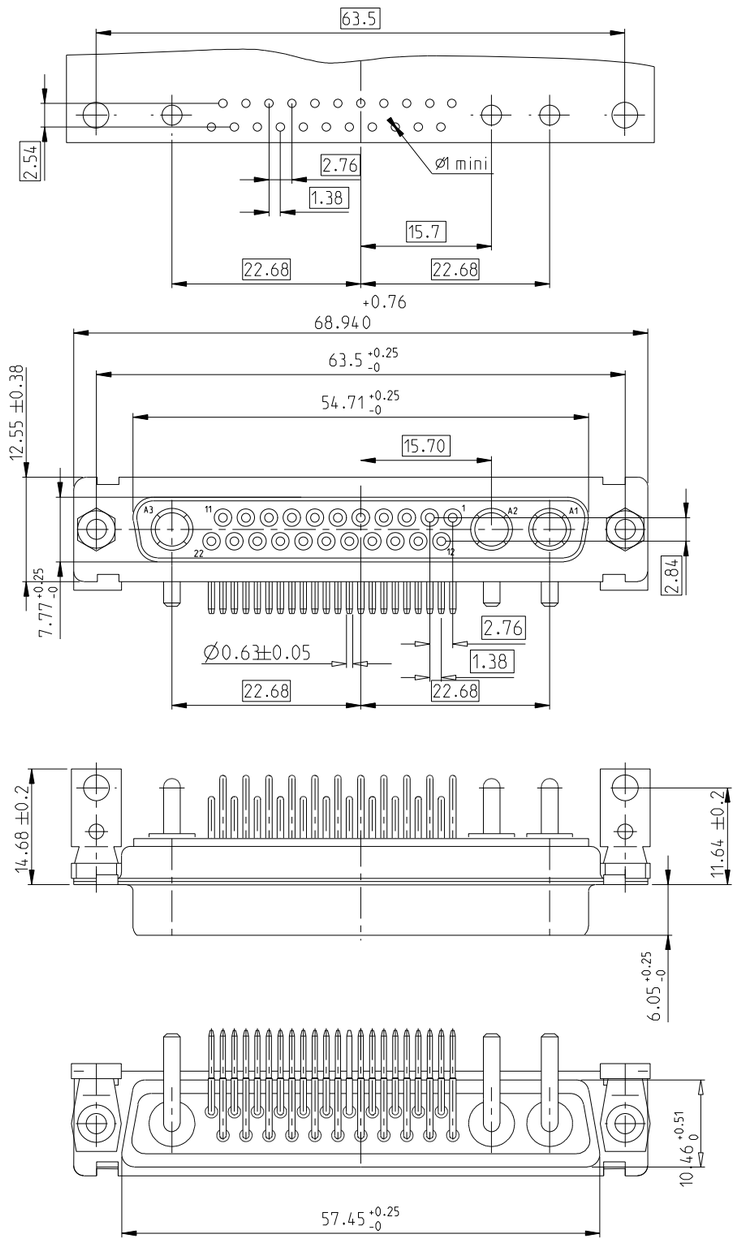

24W 7

LAYOUT AND CONNECTOR DIMENSIONS

For PCB hole diameters see table 1 sheet 1

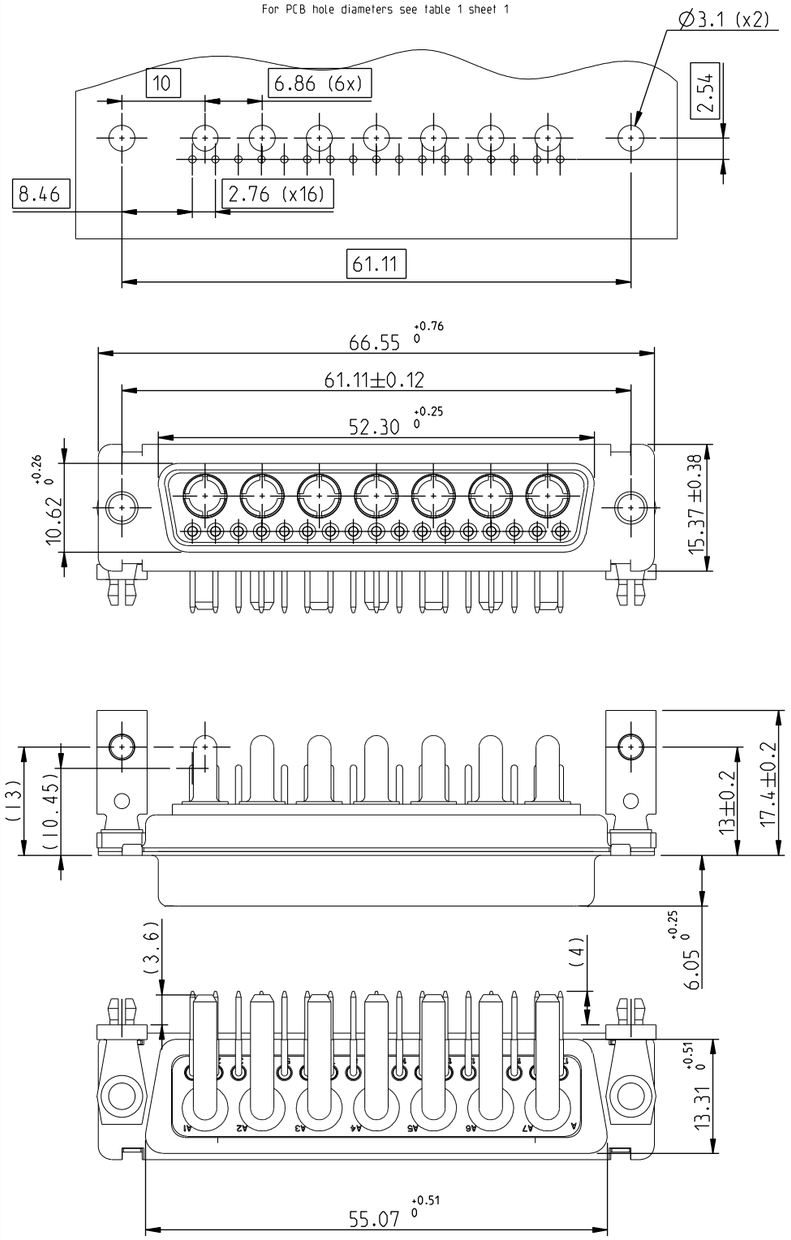

www.fciconnect.com			surface - ISO 1302		tolerance std ISO 406 ISO 1101		projection	mm
			TOLERANCES UNLESS OTHERWISE SPECIFIED					
Dr	M PESSON	2005-10-11	ANGULAR	LINEAR	0.X	±0.3	size A2	Scale 2:1
Eng	P LEGARE	2005-10-11			0.XX	±0.1		
Chr			0° ±2°		0.XXX	±0.05	ECN	F10-0060
Appr			Product family			-	Spec ref	
title	SUB FEMALE DMW EUROPE mixed power right angled solder				dwg no	C01-8639-2300		Rev. E
catalog no	-				CUSTOMER		sheet 7 of 7	

Copyright FCI.

REV E · 2006-03-28