THIS DRAWING IS UNPUBLISHED. RELEASED FOR PUBLICATION 20
© COPYRIGHT 20 BY - ALL RIGHTS RESERVED.

creo
Creo Parametric 2.0
DO NOT REVISE EXCEPT BY CAD

REVISIONS

P	LTR	DESCRIPTION	DATE	DWN	APVD
	B5	REV. BY ECO 17-017464	28NOV2017	HC	RK

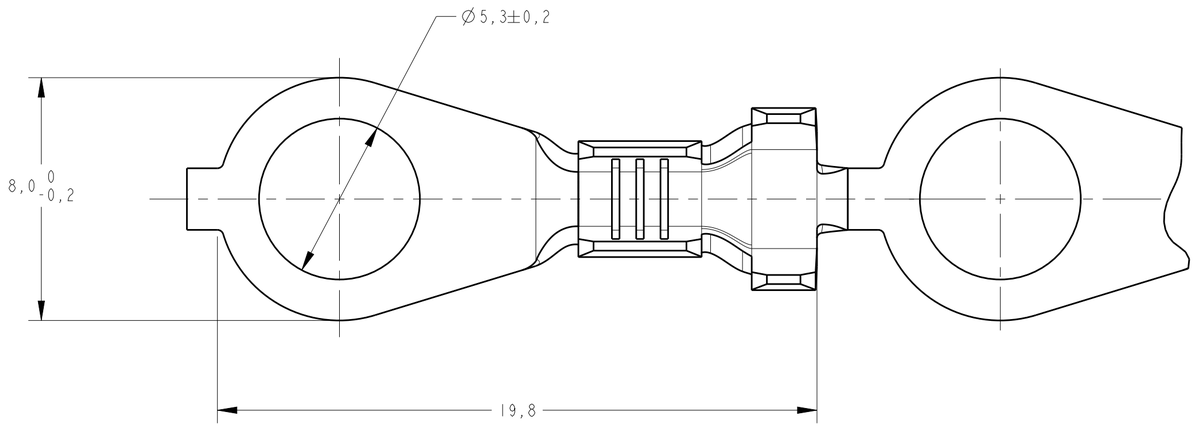

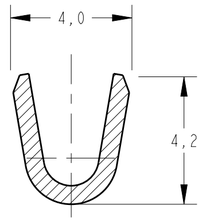

SECTION A-A
SCALE 7:1

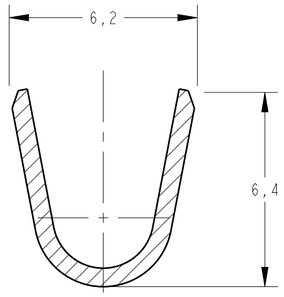

SECTION B-B
SCALE 7:1

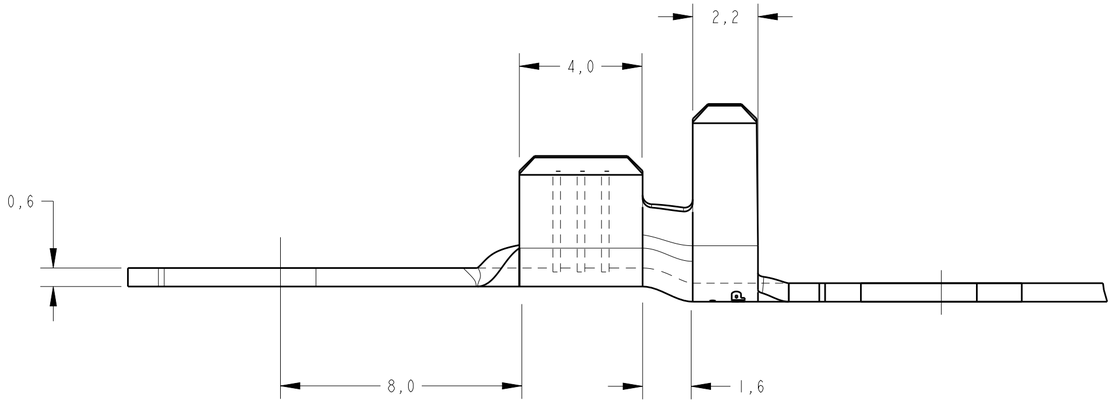

1- REBOBINAR INTERCALANDO COM PAPEL.
- REELING WITH PAPER-INTERLEAVE

	FINISH	MATERIAL	PART NUMBER
OBSOLETE	~~ESTANHADO / TIN PLATED~~	~~LATÃO / BRASS~~	~~880643-6~~
OBSOLETE	~~NIQUELADO / NICKEL PLATED~~	~~LATÃO / BRASS~~	~~880643-5~~
OBSOLETE	~~ESTANHADO / TIN PLATED~~	~~BRONZE FOSF./PHOSP.BRONZE~~	~~880643-4~~
OBSOLETE	~~—~~	~~BRONZE FOSF./PHOSP.BRONZE~~	~~880643-3~~
	ESTANHADO / TIN PLATED	LATÃO / BRASS	880643-2
	—	LATÃO / BRASS	880643-1

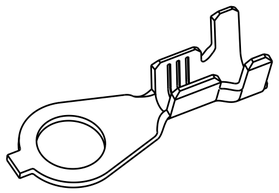

PERSPECTIVE VIEW
SCALE 3:1

INS.DIA.RANGE	2,7-4,0mm
WIRE RANGE	>1,0-2,5mm²

THIS DRAWING IS A CONTROLLED DOCUMENT.

DIMENSIONS: mm

TOLERANCES UNLESS OTHERWISE SPECIFIED:
0 PLC ±-
1 PLC ±0,3
2 PLC ±-
3 PLC ±-
4 PLC ±-
ANGLES ±1°

MATERIAL: SEE TABLE -
FINISH: SEE TABLE -

DWN NCLAPRESA 10DEC2014
CHK FFORTUNATO 10DEC2014
APVD LWPRADO 10DEC2014
PRODUCT SPEC -
APPLICATION SPEC -
WEIGHT -
Customer Drawing

TE Connectivity

NAME - RING TONGUE -

SIZE	CAGE CODE	DRAWING NO	RESTRICTED TO
A2	-	C-880643	-

SCALE 7:1 SHEET 1 OF 1 REV B5