DRAWING MADE IN THIRD ANGLE PROJECTION

THIS DRAWING IS UNPUBLISHED. RELEASED FOR PUBLICATION ,19 .
© COPYRIGHT 19 BY AMP INCORPORATED. ALL INTERNATIONAL RIGHTS RESERVED.

LOC	DIST	P	F
G	14		

REVISIONS

ZONE	LTR	DESCRIPTION	DATE	APPD
	A	REVISED PER 0720-0230-93	2/28/94	DAP

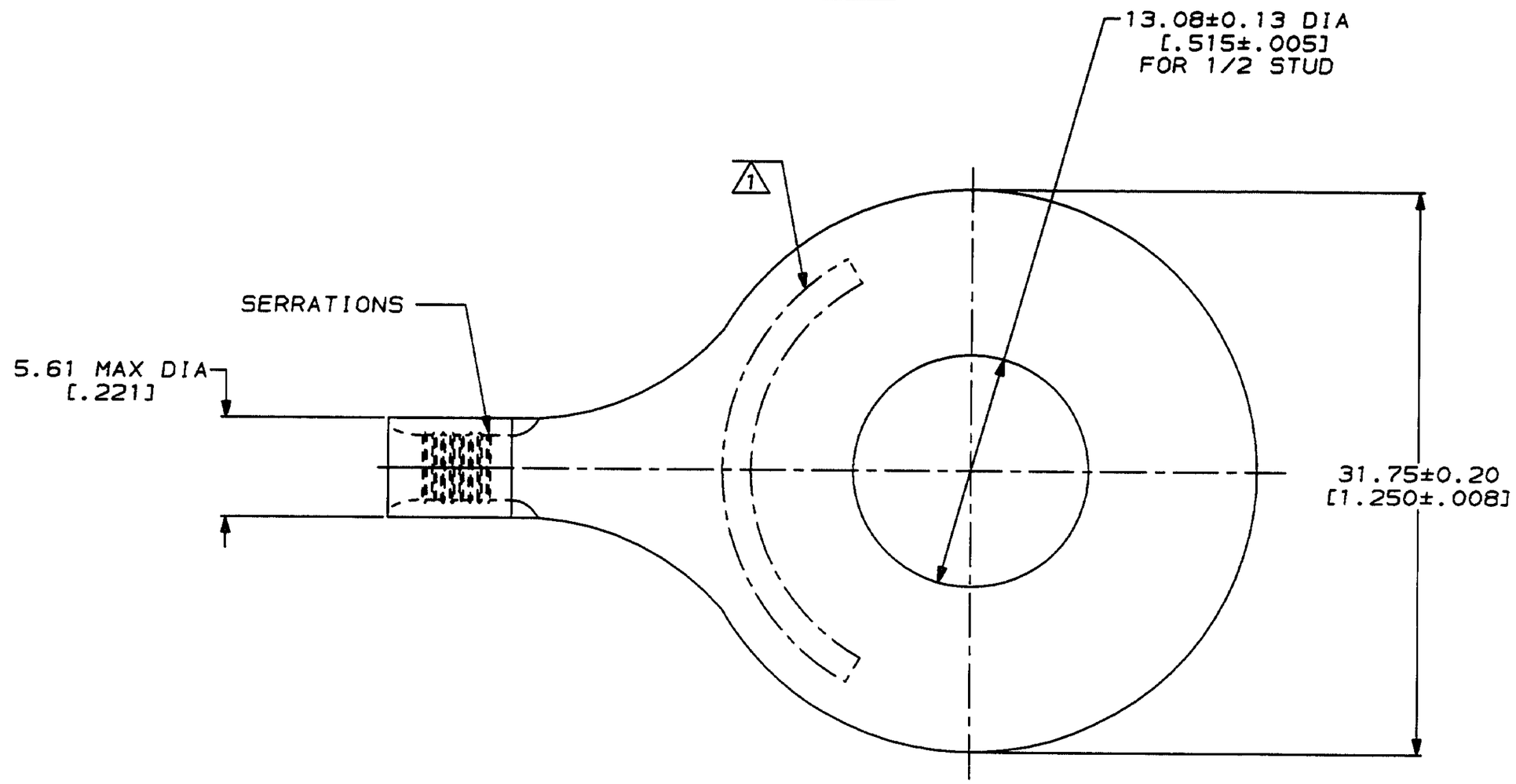

METRIC

DIMENSIONS LISTED IN mm [INCHES]

AMP WIRE RANGE	UL E13288 Listed
12-10 AWG STRANDED	12-10 AWG STRANDED
LR7189 Certified	MILITARY P/N AND CLASS
NOT CERTIFIED	NOT APPLICABLE

1 STAMP AMP 12-10* APPROX AS SHOWN

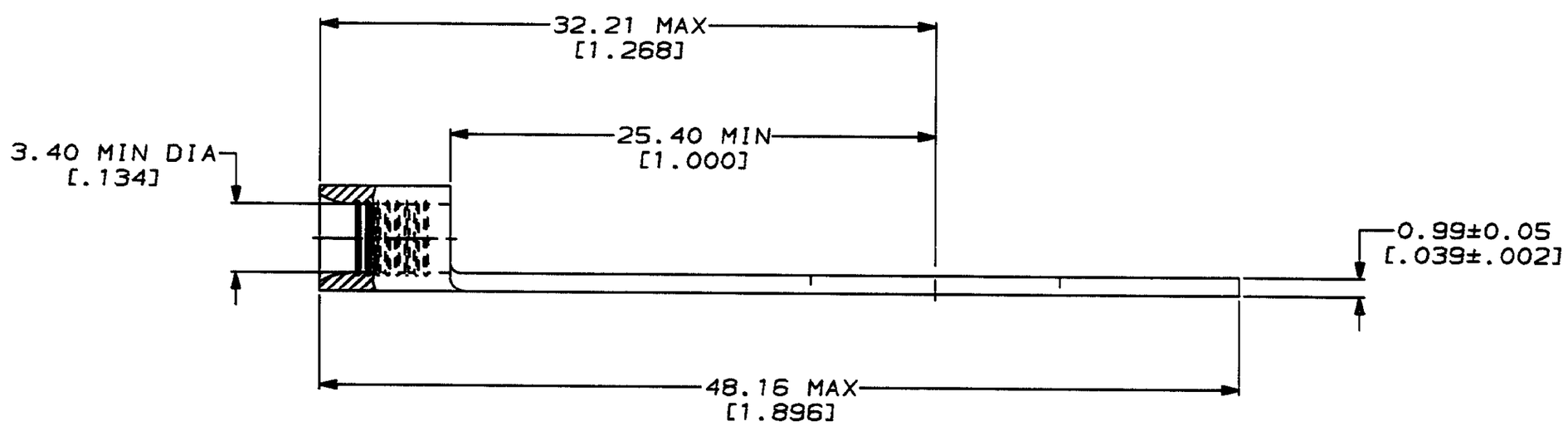

320760

PART NO

AMP INCORPORATED
CUSTOMER SERVICE SYSTEMS

FOR ADDITIONAL PRODUCT INFORMATION OR COPIES OF DRAWINGS AND TECHNICAL DOCUMENTS	PRODUCT INFORMATION CENTER 1-800-522-6752
FOR APPLICATION TOOLING INFORMATION	TOOLING ASSISTANCE CENTER 1-800-722-1111
FOR ORDER ENTRY	1-800-526-5142

MAX RECOMMENDED OPERATING TEMPERATURE: 170°C MAX

VOLTAGE RATING: NOT APPLICABLE

WIRE CROSS SECTIONAL AREA RANGE: 2.62-6.64mm² [5,180-13,100] CIR MILS STRANDED

THIS DRAWING IS A CONTROLLED DOCUMENT FOR AMP INCORPORATED. IT IS SUBJECT TO CHANGE AND THE CONTROLLING ENGINEERING ORGANIZATION SHOULD BE CONTACTED FOR THE LATEST REVISION.

DO NOT SCALE PRINT.
UNLESS SPECIFIED
~~DIMENSIONS IN mm [INCHES]~~
TOLERANCES ON :
2 PLC DEC ± -
3 PLC DEC ± -
ANGLES ± -

MATERIAL: COPPER PER ASTM B-152 ANNEALED

FINISH: TIN PLATE 0.00254[.000100] MIN THK PER MIL-T-10727

DR	2-9-93 TA BRINKMAN
CHK	2-9-93 DA PATTERSON
APPD	2-9-93 DE MILLER
APPD	2-9-93 JL MECKLEY
PRODUCT SPEC	-
APPLICATION SPEC	-
WEIGHT	-

AMP Incorporated
Harrisburg, PA 17105-3608

NAME: TERMINAL, RING TONGUE, BUDGET

SIZE	CAGE CODE	DRAWING NO
C	00779	C-320760
SCALE 4:1		SHEET 1 OF 1

CUSTOMER DRAWING

AMP 1471-6 REV 3-92

28-FEB-94 10:37:30 amp26463 /files/dept1123/dwg1123/u.bodies/u.12-10