FAIRCHILD SEMICONDUCTOR®

January 2005

BC517

NPN Darlington Transistor

- This device is designed for applications requiring extremely high current gain at currents to 1.0A.
- Sourced from process 05.

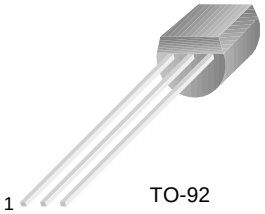

1. Collector 2. Base 3. Emitter

Absolute Maximum Ratings * T_a = 25°C unless otherwise noted

Symbol	Parameter	Value	Units
V_{CEO}	Collector-Emitter Voltage	30	V
V_{CBO}	Collector-Base Voltage	40	V
V_{EBO}	Emitter-Base Voltage	10	V
I_C	Collector Current - Continuous	1.2	A
T_J, T_{STG}	Operating and Storage Junction Temperature Range	-55 ~ 150	°C

* These ratings are limiting values above which the serviceability of any semiconductor device may impaired.

NOTES:

1. These ratings are based on a maximum junction temperature of 150 degrees C.
2. These are steady state limits. The factory should be consulted on applications involving pulsed or low duty cycle operations.

Electrical Characteristics T_a = 25°C unless otherwise noted

Symbol	Parameter	Conditions	Min.	Max	Units
Off Characteristics					
$V_{(BR)CEO}$	Collector-Emitter Breakdown Voltage *	I_C = 2.0mA, I_B = 0	30		V
$V_{(BR)CBO}$	Collector-Base Breakdown Voltage	I_C = 10µA, I_E = 0	40		V
$V_{(BR)EBO}$	Emitter-Base Breakdown Voltage	I_E = 100nA, I_C = 0	10		V
I_{CBO}	Collector Cut-off Current	V_{CB} = 30V, I_E = 0		100	nA
On Characteristics *					
h_{FE}	DC Current Gain	V_{CE} = 2.0V, I_C = 20mA	30,000		
$V_{CE(sat)}$	Collector-Emitter Saturation Voltage	I_C = 100mA, I_B = 0.1mA		1	V
$V_{BE(on)}$	Base-Emitter On Voltage	I_C = 10mA, V_{CE} = 5.0V		1.4	V

Thermal Characteristics T_a = 25°C unless otherwise noted

Symbol	Parameter	Value	Units
P_D	Total Device Dissipation Derate above 25°C	625 5.0	mW mW/°C
$R_{\theta JC}$	Thermal Resistance, Junction to Case	83.3	°C/W
$R_{\theta JA}$	Thermal Resistance, Junction to Ambient	200	°C/W

©2005 Fairchild Semiconductor Corporation

Mechanical Dimensions

TO-92

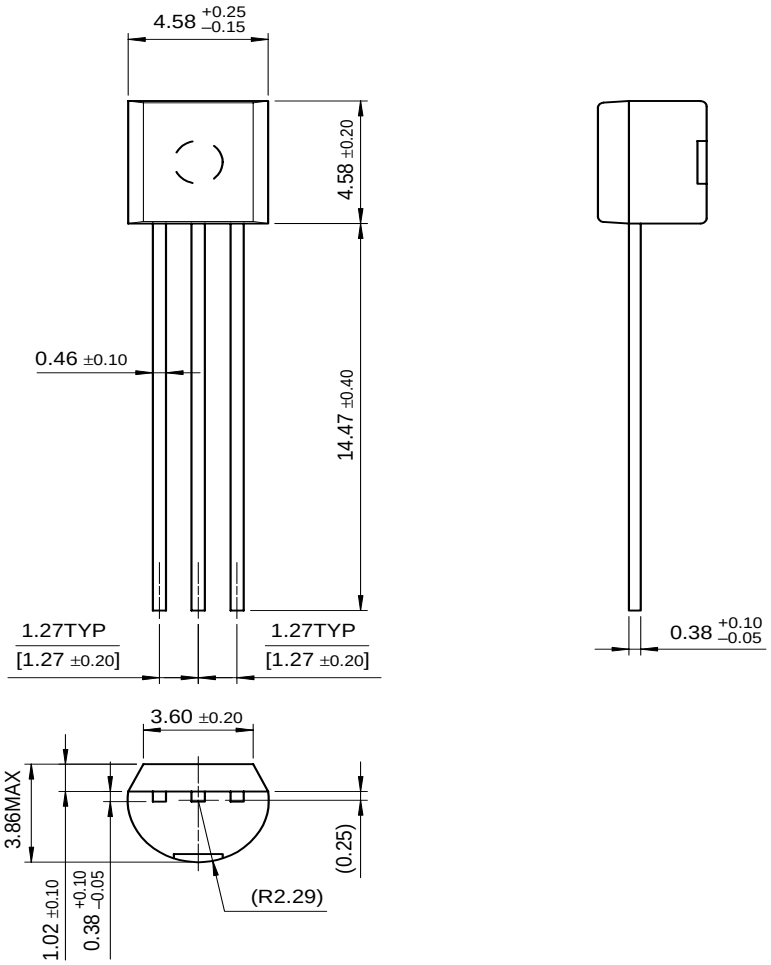

Dimensions in Millimeters

TRADEMARKS

The following are registered and unregistered trademarks Fairchild Semiconductor owns or is authorized to use and is not intended to be an exhaustive list of all such trademarks.

ACEx™	FAST®	IntelliMAX™	POP™	SPM™
ActiveArray™	FASTr™	ISOPLANAR™	Power247™	Stealth™
Bottomless™	FPS™	LittleFET™	PowerEdge™	SuperFET™
CoolFET™	FRFET™	MICROCOUPLER™	PowerSaver™	SuperSOT™-3
CROSSVOLT™	GlobalOptoisolator™	MicroFET™	PowerTrench®	SuperSOT™-6
DOME™	GTO™	MicroPak™	QFET®	SuperSOT™-8
EcoSPARK™	HiSeC™	MICROWIRE™	QS™	SyncFET™
E^2CMOS™	I^2C™	MSX™	QT Optoelectronics™	TinyLogic®
EnSigna™	*i-Lo*™	MSXPro™	Quiet Series™	TINYOPTO™
FACT™	ImpliedDisconnect™	OCX™	RapidConfigure™	TruTranslation™
FACT Quiet Series™		OCXPro™	RapidConnect™	UHC™
Across the board. Around the world.™		OPTOLOGIC®	µSerDes™	UltraFET®
The Power Franchise®		OPTOPLANAR™	SILENT SWITCHER®	UniFET™
Programmable Active Droop™		PACMAN™	SMART START™	VCX™

DISCLAIMER

FAIRCHILD SEMICONDUCTOR RESERVES THE RIGHT TO MAKE CHANGES WITHOUT FURTHER NOTICE TO ANY PRODUCTS HEREIN TO IMPROVE RELIABILITY, FUNCTION OR DESIGN. FAIRCHILD DOES NOT ASSUME ANY LIABILITY ARISING OUT OF THE APPLICATION OR USE OF ANY PRODUCT OR CIRCUIT DESCRIBED HEREIN; NEITHER DOES IT CONVEY ANY LICENSE UNDER ITS PATENT RIGHTS, NOR THE RIGHTS OF OTHERS.

LIFE SUPPORT POLICY

FAIRCHILD'S PRODUCTS ARE NOT AUTHORIZED FOR USE AS CRITICAL COMPONENTS IN LIFE SUPPORT DEVICES OR SYSTEMS WITHOUT THE EXPRESS WRITTEN APPROVAL OF FAIRCHILD SEMICONDUCTOR CORPORATION.
As used herein:

1. Life support devices or systems are devices or systems which, (a) are intended for surgical implant into the body, or (b) support or sustain life, or (c) whose failure to perform when properly used in accordance with instructions for use provided in the labeling, can be reasonably expected to result in significant injury to the user.

2. A critical component is any component of a life support device or system whose failure to perform can be reasonably expected to cause the failure of the life support device or system, or to affect its safety or effectiveness.

PRODUCT STATUS DEFINITIONS

Definition of Terms

Datasheet Identification	Product Status	Definition
Advance Information	Formative or In Design	This datasheet contains the design specifications for product development. Specifications may change in any manner without notice.
Preliminary	First Production	This datasheet contains preliminary data, and supplementary data will be published at a later date. Fairchild Semiconductor reserves the right to make changes at any time without notice in order to improve design.
No Identification Needed	Full Production	This datasheet contains final specifications. Fairchild Semiconductor reserves the right to make changes at any time without notice in order to improve design.
Obsolete	Not In Production	This datasheet contains specifications on a product that has been discontinued by Fairchild semiconductor. The datasheet is printed for reference information only.