REV.	N° DCR	NATURE DE LA MODIFICATION	DATE	VISA

SYSTEM CONFIDENTIAL

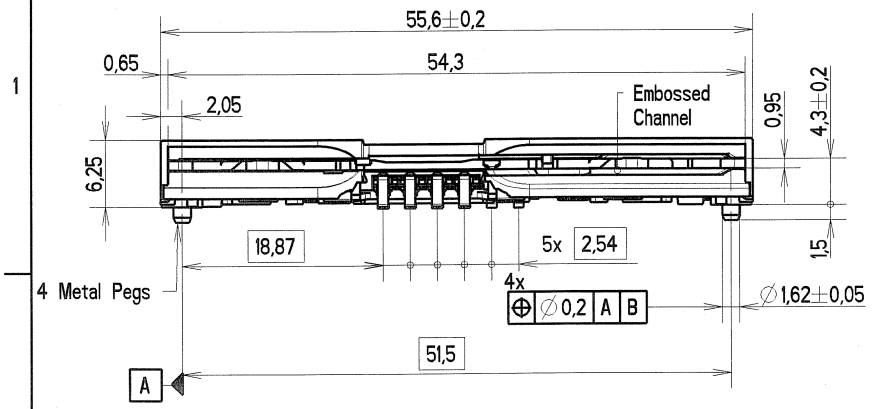

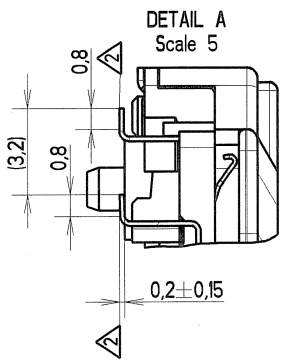

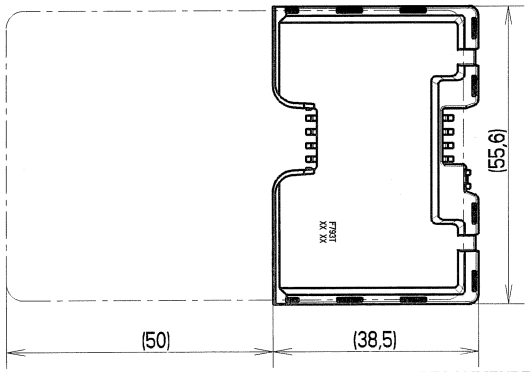

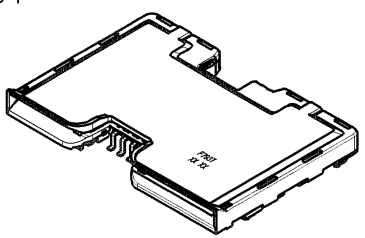

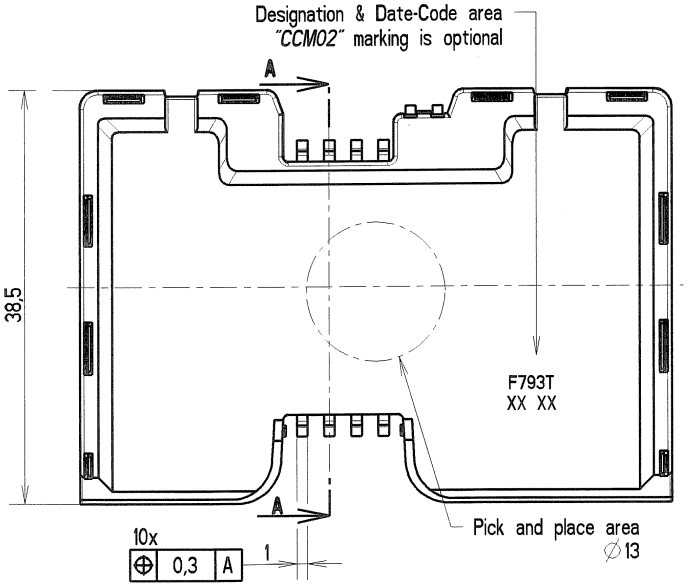

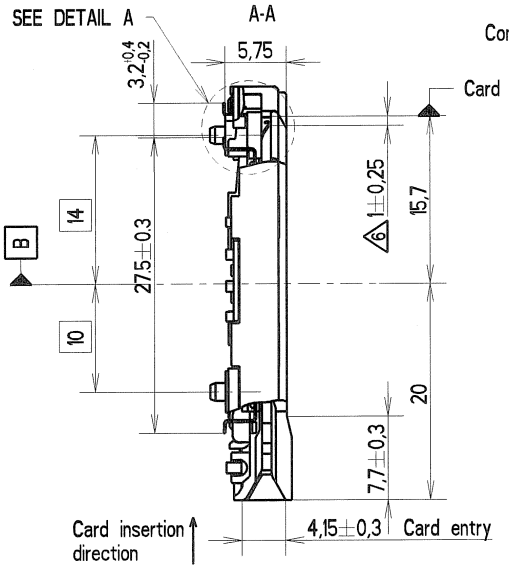

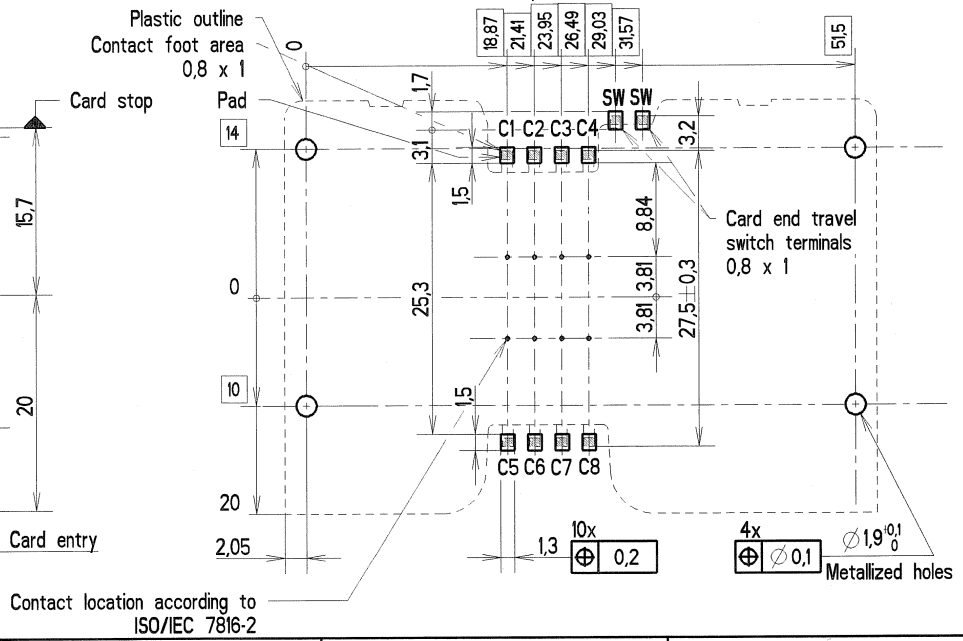

Packaging	Packaging drawing	Designation	Part Number
Tray	030278Y0041	CCM02-F793 LFT	Y1122-F793A LFT

Notes :

- 1 - Termination to PCB : SMT reflow soldering
  Temperature/time profile according to :
  C&K PS-LF-001 specification.
  Since there are no boardlocks, the connector must be held in place on the PCB accross the top face of the cover.
- 2 - Level of each contact tail compared to the nearest plastic stand-off.
  Coplanarity of metal soldering surfaces : 0,15 mm.
- 3 - Recommendation for solder paste thickness > 0,2 mm.
- 4 - 2,5 microns min tin plating on contact terminal areas and 0,1 microns min gold plating on switch terminal areas.
- 5 - Contacts forces :
  - max 0,5 N per contact with max. card thickness.
  - min 0,2 N per contact with min. card thickness.
- 6 - Card end travel switch NO activates when the sliding card is 1 mm from the card stop.
- 7 - In case of customer accessories integration requesting an interface with CCM, please ask C&K for a 3D model.

MATIERE	TRAITEMENT	PROTECTION
SAUF INDIQUE : -COTES DONNEES AVANT PROTECTION -BAVURES ET ARETES VIVES SUPPRIMEES	TOL. LINEAIRE ± 0,1 / TOL. ANGULAIRE ± 2 ° / ETAT DE SURFACE Ra	DIMENSIONS CRITIQUES / DIMENSIONS SPC
DESSINE C.DECODTS DATE 16/10/2008	ANALYSE Y / TAB. FAM. Y	PRO/E Y / LANGAGE E
VERIFIE G.PINON DATE 16/10/2008		
APPROUVE L.KUBAT DATE 16/10/2008	REMPLACE	
C&K Components	PROJECTION 1-ER DIEDRE / ECHELLE 2	DESIGNATION CCM02-F793 LFT 4 metal pegs SLIDING VERSION
BP 359 - 39105 Dole - FRANCE -	TAILLE A3 / FEUILLE 1 / 1	NUMERO CU 1122M1YF793 / REV -

CE PLAN EST LA PROPRIETE DE C&K COMPONENTS SAS ET NE PEUT ETRE REPRODUIT OU COMMUNIQUE SANS SON AUTORISATION