MATERIAL NUMBER	# OF COLUMNS	# OF DIFF PAIR	DIM "A" MAX	DIM "B"	PTH ø
76460-*010	10	20	26.60	17.10	0.46 ±0.05
76460-*016	16	32	38.00	28.50	
76460*020	10	20	26.60	17.10	0.39 ±0.05
76460-*026	16	32	38.00	28.50	

76460-*0**

MODULE & TAIL PLATING TYPE
5 = RIGHT GUIDED LEAD-FREE

# OF COLUMNS
10 = 10 COL 0.46 PTH
16 = 16 COL 0.46 PTH
20 = 10 COL 0.39 PTH
26 = 16 COL 0.39 PTH

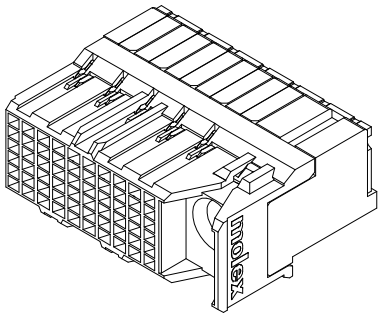

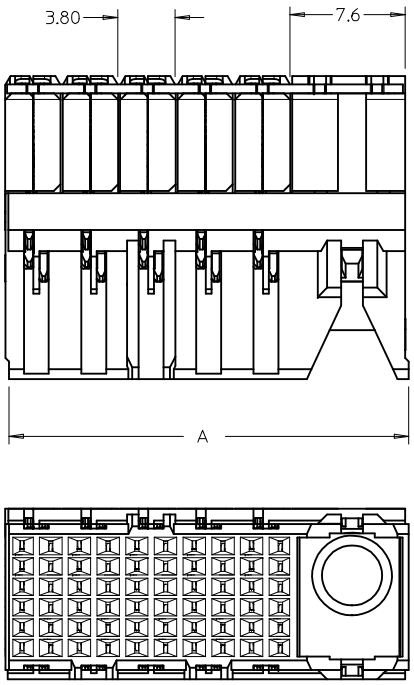

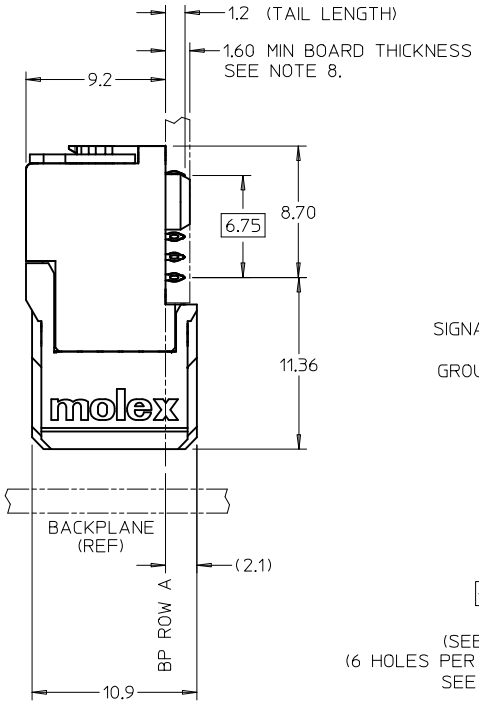

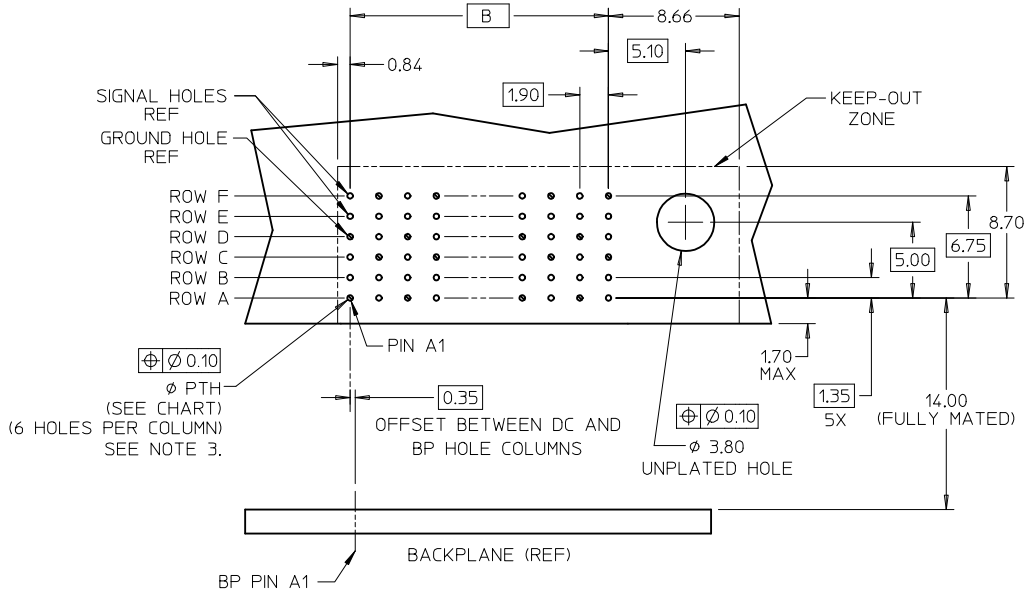

DAUGHTERCARD HOLE PATTERN
(CONNECTOR SIDE)

NOTES:
1. MATERIALS: HOUSING - LIQUID CRYSTAL POLYMER (LCP), GLASS-FILLED, UL94V-0
   TERMINALS - HIGH PERFORMANCE COPPER ALLOY
2. FINISH: 30µIN MIN SELECTIVE GOLD IN CONTACT AREA, SELECTIVE TIN ON PCB TAILS. NICKEL OVERALL.
3. REFER TO MOLEX PRODUCT SPEC PS-76060-999 FOR PERFORMANCE SPECIFICATIONS AND ADDITIONAL PCB INFORMATION.
4. EACH SIGNAL WAFER CONTAINS 2 COLUMNS OF TERMINALS.
5. PRODUCT IS PACKAGED PER PK-70873-592.
6. THIS PART CONFORMS TO CLASS B REQUIREMENTS OF COSMETIC SPEC PS-45499-002.
7. REFER TO MOLES SALES DRAWING SD-76455-003 FOR THE MATING HEADERS.
8. WHEN USING MOLEX SUPPLIED #2-32 SCREW 73726-4000 (4.31mm ±0.38 THREADABLE SCREW LENGTH), THE MAXIMUM BOARD THICKNESS IS 1.8 mm TO 2.4 mm.
9. REFER TO MOLEX PCB ROUTING GUIDE AS-76060-990 FOR ANTIPAD AND ROUTING RECOMMENDATIONS.

CONVERT TO LEAD-FREE
EC NO: UCP2013-2489 2012/12/17
DRWN:TIBARRA 2012/12/18
CHKD:TELO 2012/12/31
APPR:SMILLER
DESCRIPTION
REV C

QUALITY SYMBOLS
=0
=0
=0

GENERAL TOLERANCES (UNLESS SPECIFIED)	mm	INCH
4 PLACES	± ---	± ---
3 PLACES	± ---	± ---
2 PLACES	± 0.13	± ---
1 PLACE	± 0.25	± ---
0 PLACE	± ---	± ---
ANGULAR ±1/2°		

DRAFT WHERE APPLICABLE MUST REMAIN WITHIN DIMENSIONS

DIMENSION STYLE: MM ONLY
SCALE: 4:1
DESIGN UNITS: METRIC
THIRD ANGLE PROJECTION

DRAWN BY: JLAURX DATE: 2008/04/11
CHECKED BY: JLAURX DATE: 2008/04/11
APPROVED BY: JLAURX DATE: 2008/04/11
MATERIAL NO.: SEE TABLE

TITLE: IMPACT DAUGHTERCARD 2 PAIR SIGNAL MODULE GUIDE RIGHT SALES DWG

molex

DOCUMENT NO.: SD-76460-004
SHEET NO.: 1 OF 1

SIZE C

THIS DRAWING CONTAINS INFORMATION THAT IS PROPRIETARY TO MOLEX INCORPORATED AND SHOULD NOT BE USED WITHOUT WRITTEN PERMISSION