THIS DRAWING IS UNPUBLISHED. RELEASED FOR PUBLICATION 20
© COPYRIGHT 20 BY - ALL RIGHTS RESERVED.

LOC	DIST
B	E

REVISIONS

P	LTR	DESCRIPTION	DATE	DWN	APVD
	M1	COLOR CODE DETAILS ADDED	09JAN2014	TJ	JK
	M2	ADDITION OF NOTE 12. TEXT "REF" DIM 3 & 3.7 IN ZONE C1 & C2. "29.4 MAX" IN ZONE B3	21JULY2015	TJ	PS

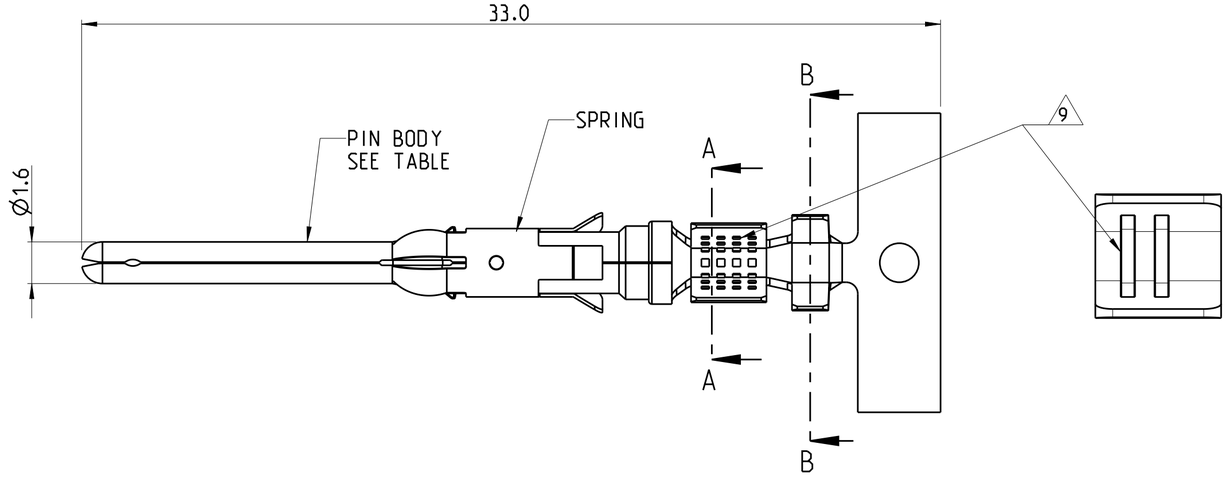

PLATING ZONES

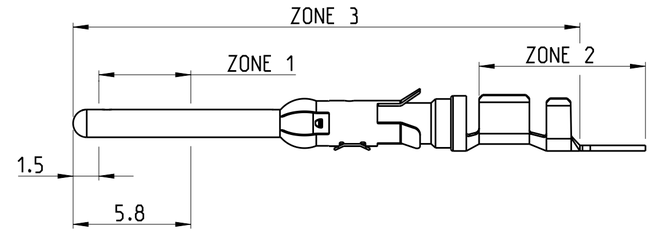

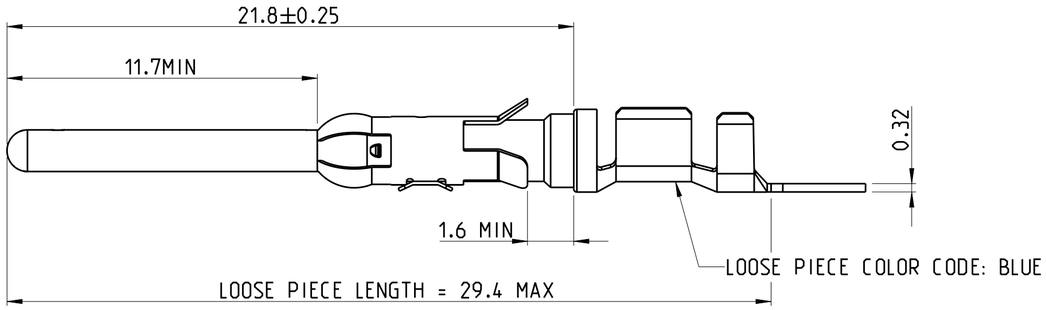

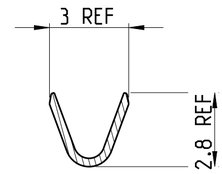

SECTION A-A

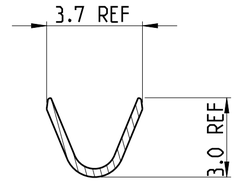

SECTION B-B

NOTES

1. 1.27 MICRON MIN NICKEL PLATE OVER ZONE 3.
   0.76 MICRON MIN PRECIOUS METAL PLATE OVER ZONE 1.
   1 MICRON MIN TIN PLATE OVER ZONE 2.
   CONFORMS TO THE REQUIREMENTS OF TE CONNECTIVITY PRODUCT SPEC 108-10042
   BASED ON EIA/ECA-364-1000.01A (CONTROLLED ENVIRONMENT APPLICATIONS)

2. 1.27 MICRONS MIN NICKEL PLATE OVER ZONE 3.
   0.76 MICRON MIN PRECIOUS METAL ELECTROPLATE OVER ZONE 1.
   0.076 MICRON MIN GOLD FLASH PLATE OVER THE REMAINDER OF ZONE 3.
   CONFORMS TO THE REQUIREMENTS OF TE CONNECTIVITY PRODUCT SPEC 108-10042
   BASED ON EIA/ECA-364-1000.01A (CONTROLLED ENVIRONMENT APPLICATIONS)

3. 1.54 - 2.54 MICRON SILVER PLATE OVER ZONE 3.

4. 1.27 MICRON MIN NICKEL PLATE OVER ZONE 3.
   0.76 MICRON MIN GOLD PLATE OVER ZONE 1.
   0.076 MICRON MIN GOLDFLASH PLATE OVER THE REMAINDER OF ZONE 3.

5. 1.27 MICRON MIN NICKEL PLATE OVER ZONE 3.
   0.76 MICRON MIN GOLD PLATE OVER ZONE 1.
   1 MICRON MIN TIN PLATE OVER ZONE 2.

6. HOT-DIPPED PRETIN

7. 1.27 MICRONS MIN NICKEL PLATE OVER ZONE 3.
   1 - 3 MICRON ELECTRO-TIN PLATE OVER ZONE 3

8. 0.76 MICRON MIN NICKEL PLATE OVER ZONE 3 PER QQ-N-290
   1.5 - 2.54 MICRON SILVER PLATE OVER ZONE 3.

9. SERRATIONS CAN BE MULTI LOCK OR TWO SLOTS.

10. WIRE RANGE: 0.75 - 1.50 mm² (18-16 AWG)

11. INSULATION RANGE: 2.0 - 2.5 mm (.080-.100) DIA

12. OMISSION OF 6 CONTACTS MAX PER REEL OF 5000PCS

REELING	FINISH	SPRING MATERIAL	PIN BODY	LOOSE PIECE	PART NUMBER
A	2	STAINLESS STEEL	PHBR	164164-8	1-164161-5
A	3	STAINLESS STEEL	PHBR	164164-7	1-164161-3
B	3	STAINLESS STEEL	PHBR		1-164161-2
A	6	STAINLESS STEEL	BRASS	164164-6	1-164161-1
A	6	STAINLESS STEEL	BRASS	164164-5	164161-9
A	1	STAINLESS STEEL	BRASS	164164-4	164161-7
B	1	STAINLESS STEEL	BRASS		164161-6
A	2	STAINLESS STEEL	BRASS	164164-2	164161-4
A	7	STAINLESS STEEL	BRASS	164164-1	164161-3
B	2	STAINLESS STEEL	BRASS		164161-2

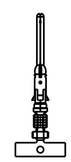

WIRE BARRELS FACE UP.

REELING DIRECTION

C — AS DIRECTION 'A' BUT BARRELS DOWN

A

B

THIS DRAWING IS A CONTROLLED DOCUMENT.

DIMENSIONS: mm

TOLERANCES UNLESS OTHERWISE SPECIFIED:

0 PLC	±0.5
1 PLC	±0.25
2 PLC	±0.15
3 PLC	±0.15
4 PLC	±
ANGLES	±2°

MATERIAL: SEE TABLE

FINISH: SEE TABLE

DWN	J. BRIGHT 01JUN2012
CHK	J.AMBROSE 01JUN2012
APVD	M GREFNER 01JUN2012
PRODUCT SPEC	108-10042
APPLICATION SPEC	114-19000
WEIGHT	-

TE Connectivity

NAME: TYPE III+, SIZE 16, PIN ASS'Y LONG SERIES, 18-16 AWG, 2.0-2.5mm DIA INSULATION

SIZE	CAGE CODE	DRAWING NO	RESTRICTED TO
A2	00779	C-164161	-

CUSTOMER DRAWING | SCALE NTS | SHEET 1 OF 1 | REV M2

1471-9 (3/11)