The product information in this catalog is for reference only. Please request the Engineering Drawing for the most current and accurate design information.
All non-RoHS products have been discontinued, or will be discontinued soon. Please check the products status on the Hirose website RoHS search at www.hirose-connectors.com, or contact your Hirose sales representative.

2mm Hard Metric Connector

PCN21 Series

IEC 61076-4-101-compliant

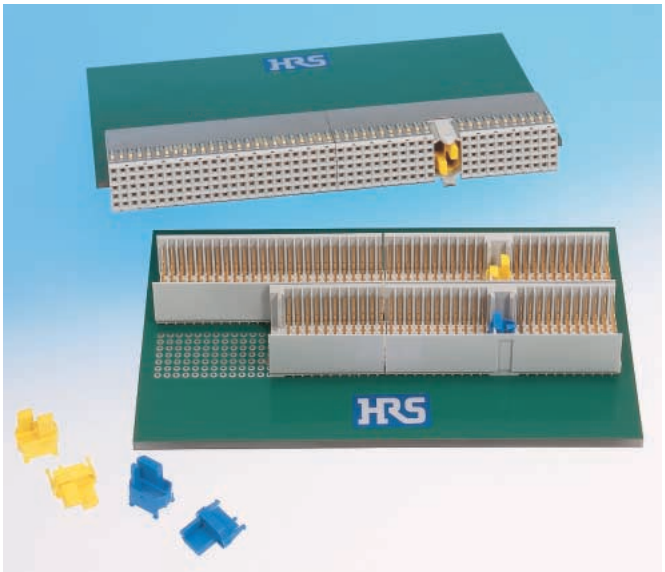

■Applications

Switchboards, transmission systems, Celluler base stations, industrial computer boards, measuring instruments, control equipment

■Features

1. Variety of styles

IEC Styles: A (110 contacts, 5 row), B (125 contacts, 5 row), C (55 contacts, 5 row), D (176 contacts, 8 row), E (200 contacts, 8 row) and M (5 row + 3 coaxial or power contacts).

Compact PCI styles: P2/J2 (110 contacts), P3/J3 (95 contacts) and Type AB (125 contacts).

2. Compliant press-fit board connection

Headers and receptacles with the compliant press-fit terminations can be easily installed on PCB with readily available tools.

3. High reliability socket contacts

Two-point contacts assure good electrical and mechanical connection.

4. Ground connection

Ground connection contact rows can be added (except M Style).

5. 3-stage sequential contacts

Header can be supplied with different lengths of contacts (mating side) to assure ground-signal-power mating sequence.

6. Coding keys

Style A, D and M will accept coding keys to prevent mating of incorrect connectors.

7. Different platings are available

Gold plating and tin plating are available for the termination side. (Except 8 rows type)

8. Coding key

UL listed (File E52653)

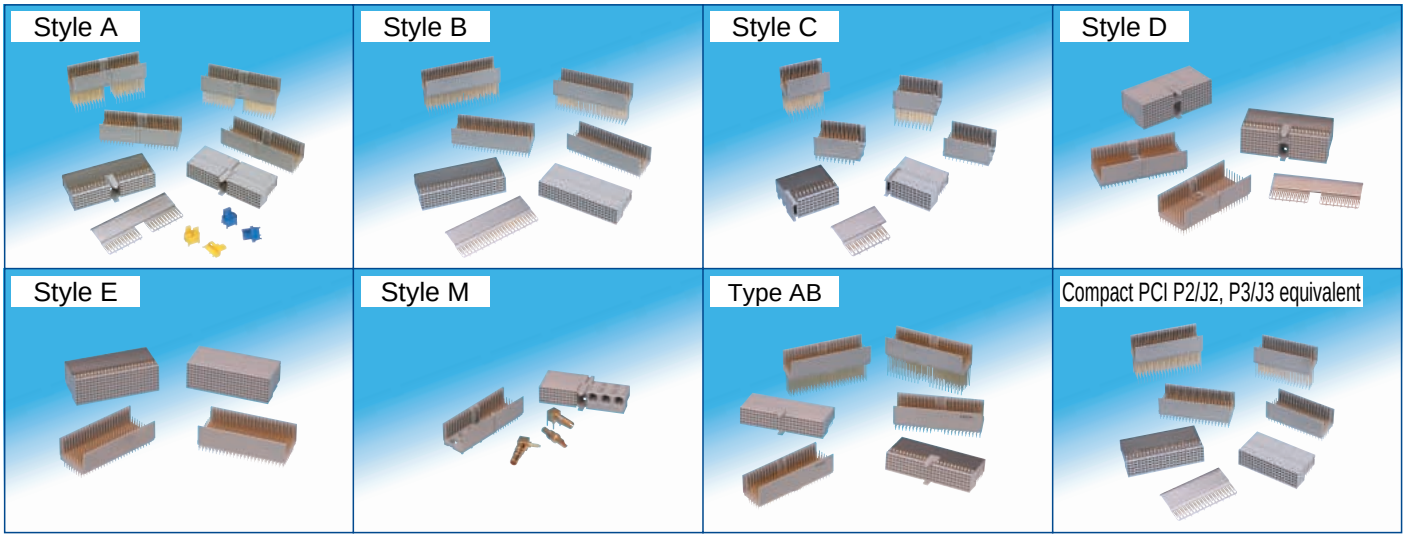

The product information in this catalog is for reference only. Please request the Engineering Drawing for the most current and accurate design information.
All non-RoHS products have been discontinued, or will be discontinued soon. Please check the products status on the Hirose website RoHS search at www.hirose-connectors.com, or contact your Hirose sales representative.

■PCN21 Series Seletion Chart

Item \ Standards			IEC 61076-4-101 compliant				
			Style A	Style B	Style C	Style D	Style E
Header connector (Back Wiring Board side (BWB) male connector)	Short pin type	Without ground terminal	P6 PCN21∗-110PA-2PF	P7 PCN21∗-125PB-2PF	P8 PCN21∗-55PC-2PF	P9 PCN21B-176PD-2PF	P10 PCN21B-200PE-2PF
		With ground terminal	P6 PCN21∗-110PA-2PF-G	P7 PCN21∗-125PB-2PF-G	P8 PCN21∗-55PC-2PF-G	P9 PCN21B-176PD-2PF-G	P10 PCN21B-200PE-2PF-G
	Long pin type	Without ground terminal	P6 PCN21∗-110PA-2W	P7 PCN21∗-125PB-2W	P8 PCN21∗-55PC-2W		
		With ground terminal	P6 PCN21∗-110PA-2W-G	P7 PCN21∗-125PB-2W-G	P8 PCN21∗-55PC-2W-G		
Receptacle connector (Package side female connector)	Without ground plate		P13 PCN21∗-110SA-2PF	P14 PCN21∗-125SB-2PF	P15 PCN21∗-55SC-2PF	P16 PCN21B-176SD-2PF	P17 PCN21B-200SE-2PF
	With ground plate	With top ground plate	P13 PCN21∗-110SA-2PF-G	P14 PCN21∗-125SB-2PF-G	P15 PCN21∗-55SC-2PF-G	P16 PCN21B-176SD-2PF-G	P17 PCN21B-200SE-2PF-G
		Bottom ground plate	P20 PCN21∗-SA-G	P20 PCN21∗-SB-G	P20 PCN21∗-SC-G	P21 PCN21B-SD-G	P21 PCN21B-SE-G

Note: …A: PCB leads gold plated (top ground plate is tin-lead or tin plated, bottom ground plate is tin-lead plated). B…PCB leads tin plated
Mid-plane (Shroud): Page 22 to 23, Coding key: Page 24, High power contact or coaxial connector: Page 25

The product information in this catalog is for reference only. Please request the Engineering Drawing for the most current and accurate design information.
All non-RoHS products have been discontinued, or will be discontinued soon. Please check the products status on the Hirose website RoHS search at www.hirose-connectors.com, or contact your Hirose sales representative.

IEC 61076-4-101 compliant Style M	Type AB	Compact PCI P2/J2 equivalent	Compact PCI P3/J3 equivalent
P11 PCN21∗-55PM-2PF	P12 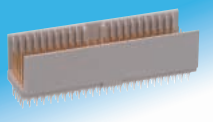 PCN21∗-125PAB-2PF	P7 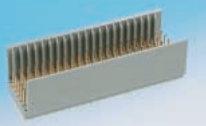 PCN21∗-110PB-2PF	P7 PCN21∗-95PB-2PF
	P12 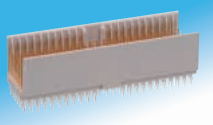 PCN21∗-125PAB-2PF-G	P7 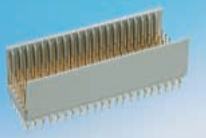 PCN21∗-110PB-2PF-G	P7 PCN21∗-95PB-2PF-G
	P12 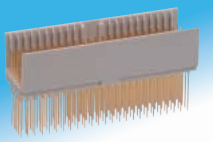 PCN21∗-125PAB-2W	P7 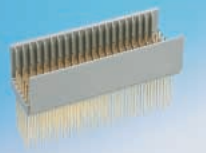 PCN21∗-110PB-2W	P7 PCN21∗-95PB-2W
	P12 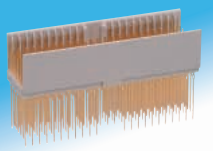 PCN21∗-125PAB-2W-G	P7 PCN21∗-110PB-2W-G	P7 PCN21∗-95PB-2W-G
P18 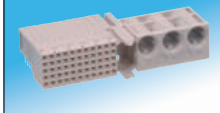 PCN21∗-55SM-2PF	P19 PCN21∗-125SAB-2PF	P14 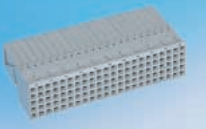 PCN21∗-110SB-2PF	P14 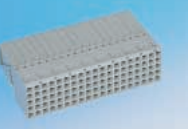 PCN21∗-95SB-2PF
	P19 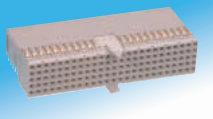 PCN21∗-125SAB-2PF-G	P14 PCN21∗-110SB-2PF-G	P14 PCN21∗-95SB-2PF-G
	P20 PCN21∗-SA-G	P20 PCN21∗-SB1-G	P20 PCN21∗-SB2-G

The product information in this catalog is for reference only. Please request the Engineering Drawing for the most current and accurate design information.
All non-RoHS products have been discontinued, or will be discontinued soon. Please check the products status on the Hirose website RoHS search at www.hirose-connectors.com, or contact your Hirose sales representative.

■Ordering information

Connector

PCN 21∗ - ∗PA∗ - 2PF - G (01)

❶ ❷ ❸ ❹ ❺ ❻ ❼ ❽ ❾ ❿

❶ Series name : PCN 21	❻ Positioning post (Applicable to receptacle styles A and C only) Blank : With A : Without
❷ A··PCB leads : Gold plated B··PCB leads : Tin plated	
❸ No. of contacts : 55, 95, 110, 125,176,200	❼ Contact pitch: 2 mm
❹ Connector classification P: Pin header S: Receptacle	❽ Terminal length PF : Press-fit short pin W : Press-fit long pin
❺ IEC type A : IEC 61076-4-101 Style A B : IEC 61076-4-101 Style B C : IEC 61076-4-101 Style C D : IEC 61076-4-101 Style D E : IEC 61076-4-101 Style E M : IEC 61076-4-101 Style M AB : Compact PCI AB type equivalent (For Compact PCI P2/J2, P5/J5 equivalent, the IEC type should be style B.)	❾ Ground Blank : Without ground terminal G : With ground terminal ❿ Contact area gold plating thickness Blank : 0.8 μm (01) : 0.2 μm

Bottom ground plate for receptacle

PCN 21∗ - SA - G

❶ ❷ ❸ ❹ ❺

❶ Series name: PCN21	❹ Applicable connector A : for PCN21∗-110SA-2PF-G B : for PCN21∗-125SB-2PF-G C : for PCN21∗-55SC-2PF-G D : for PCN21B-176SD-2PF-G E : for PCN21B-200SE-2PF-G B1: for PCN21∗-110SB-2PF-G B2: for PCN21∗- 95SB-2PF-G
❷ A··PCB leads : Gold plated B··PCB leads : Tin plated	
❸ Connector classification S : For receptacle	❺ Ground

◆Product construction (5 row)

●Header

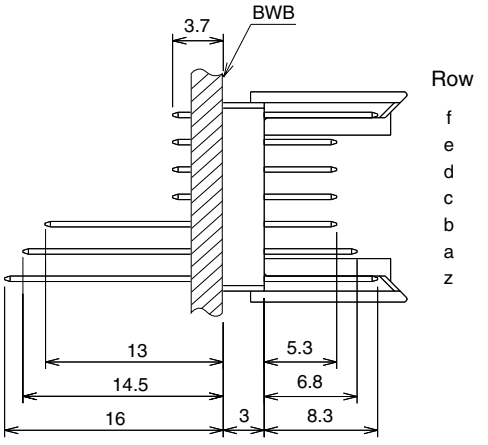

Rows f and z are ground terminals.
PCN21∗-∗P∗-2PF (W) has no ground terminal
PCN21∗-∗P∗-2PF (W)-G has ground terminal

●Receptacle

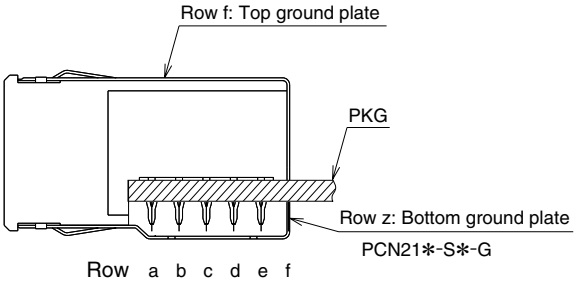

A ground plate is joined with the f row.

PCN21∗-∗S∗-2PF has no top ground plate
PCN21∗-∗S∗-2PF-G has top ground plate
PCN21∗-S∗-G has bottom ground plate only

The product information in this catalog is for reference only. Please request the Engineering Drawing for the most current and accurate design information.
All non-RoHS products have been discontinued, or will be discontinued soon. Please check the products status on the Hirose website RoHS search at www.hirose-connectors.com, or contact your Hirose sales representative.

■Product Specifications

Rating	Current rating Voltage rating	1.5A AC 300V	Operating temperature Operating humidity	–55℃ to +85℃(Note 1) 95% RH max. (No condensation)	Storage temperature Storage humidity	–10℃ to +60℃(Note 2) 40% to 70% RH (Note 2)

Item	Requirements	Test Conditions
1.Insulation resistance	10^4 MΩ	100 V DC
2.Withstanding voltage	No flashover or breakdown	750 V rms AC / 1 min
3.Contact resistance	30 mΩ max.	0.1 A
4.Vibration	No electrical discontinuity for 1μs min.	Frequency 10 to 500 Hz, single amplitude of 0.35 mm, acceleration of 50m/s2, 10 cycles in each of the 3 axis.
5.Damp heat	Contact resistance: 40 mΩ max. Insulation resistance: 10^3 MΩ min.	96 hours at temperature of 40℃ ± 2℃ and RH of 90% to 95%
6.Rapid change of temperature	Contact resistance:40 mΩ max. Insulation resistance: 10^3 MΩ min. No damage, cracks or parts dislocation	Temperature : –55℃ → +15℃ to +30℃ → +125℃ → +15℃ to +30℃ Duration : 30 → 5max. → 30 → 5max.(Minutes) 5 cycles
7.Heat resistance	Contact resistance:40 mΩ max. Insulation resistance: 10^3 MΩ min.	16 hours at temperature of 125℃
8.Operation life	Contact resistance:40 m ohms max.	500 cycles

Note 1: Includes temperature rise caused by the current flow.
Note 2: The term “storage” refers to products stored for long period of time prior to mounting and use. Operating temperature range and humidity range covers non-conducting condition of installed connectors in storage, shipment or during transportation.

■Materials / Finish

Product	Part	Material	Finish/color	Remarks
Header	Insulator	PBT	Gray	UL94V-0
	Terminal	Phosphor bronze	PCN21A Contact area : Nickel base, gold plated PCB leads : Nickel base, gold plated PCN21B Contact area : Nickel base, gold plated PCB leads : Nickel base, tin plated	——
Receptacle	Insulator	PBT	Gray	UL94V-0
	Terminal	Phosphor bronze	PCN21A Contact area : Nickel base, gold plated PCB leads : Nickel base, gold plated PCN21B Contact area : Nickel base, gold plated PCB leads : Nickel base, tin plated	——
	Shield	Phosphor bronze	PCN21A Contact area : Nickel base, gold plated Mounted area : Nickel base, tin lead plated PCN21B Contact area : Nickel base, gold plated PCB leads : Nickel base, tin plated	——
Shroud	Insulator	PBT	Gray	UL94V-0
Coding key	Insulator	PBT	Refer to page 24	UL94V-0
Power contact	——	Brass, phosphor bronze	Nickel base, gold plated	——
Coaxial contact	Insulator	PTFE	White	——
	Outer conductor	Brass, phosphor bronze	Nickel base, gold plated	——
	Inner conductor	Phosphor bronze, beryllium copper	Nickel base, gold plated	——

The product information in this catalog is for reference only. Please request the Engineering Drawing for the most current and accurate design information.
All non-RoHS products have been discontinued, or will be discontinued soon. Please check the products status on the Hirose website RoHS search at www.hirose-connectors.com, or contact your Hirose sales representative.

■Header (Style A) [Backplane side male connector, 5 row]

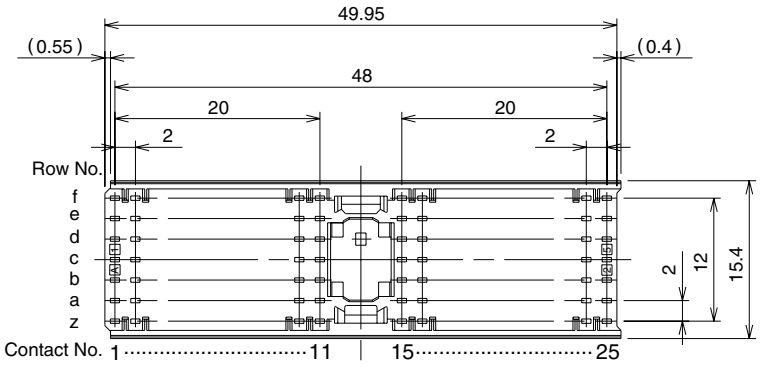

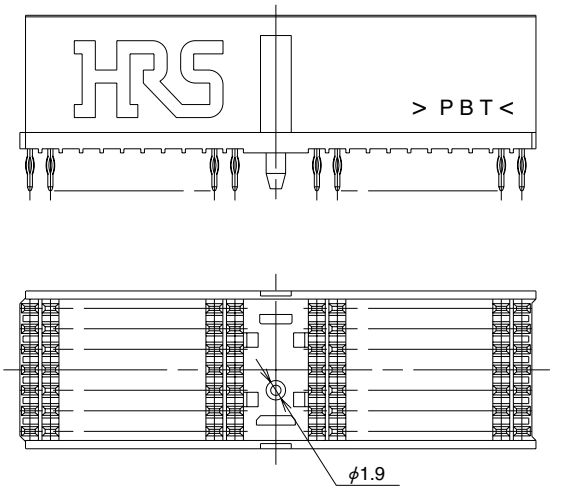

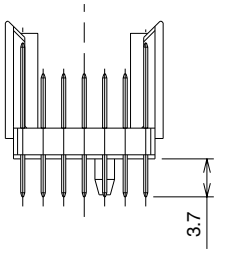

< Short pin >

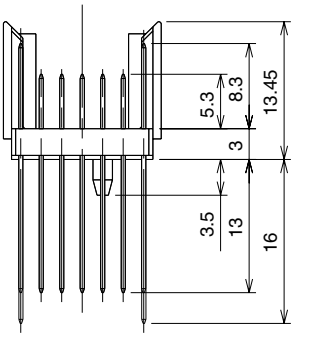

< Long pin >

◆Recommended PCB mounting pattern

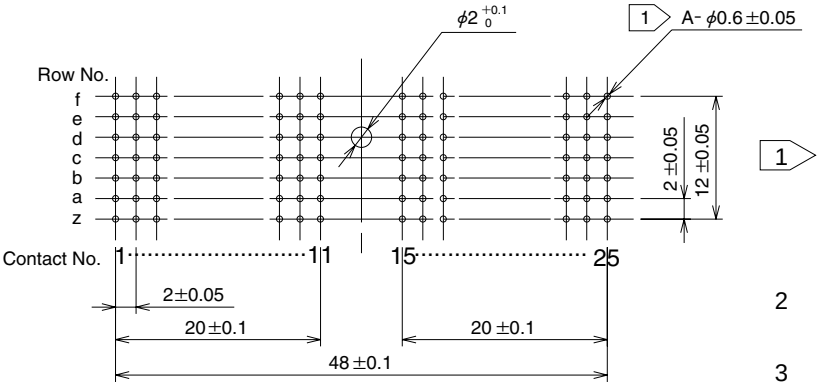

1 Plated through hole
Drilled diameter : ϕ0.7±0.02
Finished diameter : ϕ0.6±0.05
Plating : Cu 25μmin

2 Without ground terminal types, row f and z are not needed.

3 Board thickness : 1.6 to 5.6 mm

Part number	A	No. of contacts	Mounting side
PCN21∗-110PA-2PF	110	5	Short pin
PCN21∗-110PA-2PF-G	154	7	
PCN21∗-110PA-2W	110	5	Long pin
PCN21∗-110PA-2W-G	154	7	

∗A: PCB leads gold plated B: PCB leads tin plated

The product information in this catalog is for reference only. Please request the Engineering Drawing for the most current and accurate design information.
All non-RoHS products have been discontinued, or will be discontinued soon. Please check the products status on the Hirose website RoHS search at www.hirose-connectors.com, or contact your Hirose sales representative.

■Header (Style B) [Backplane side male connector, 5 row]

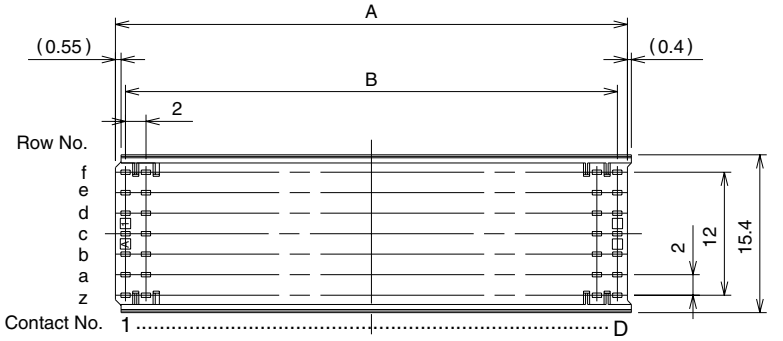

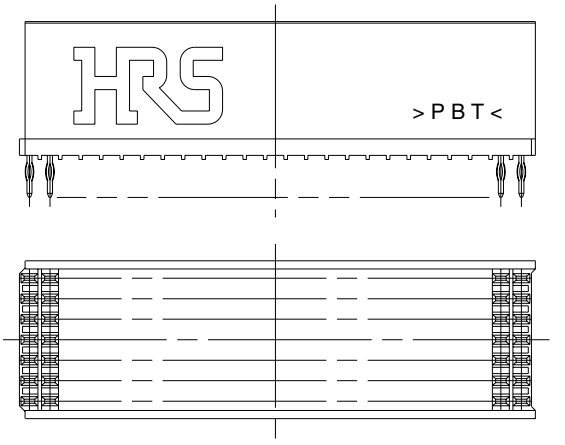

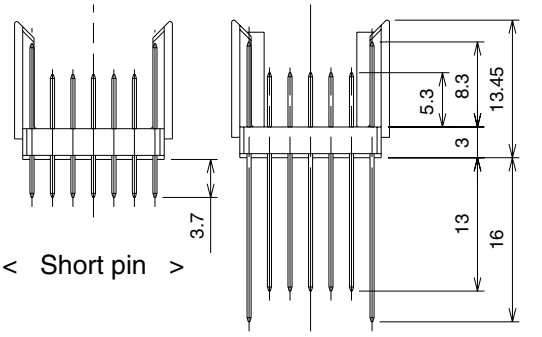

◆Recommended PCB mounting pattern

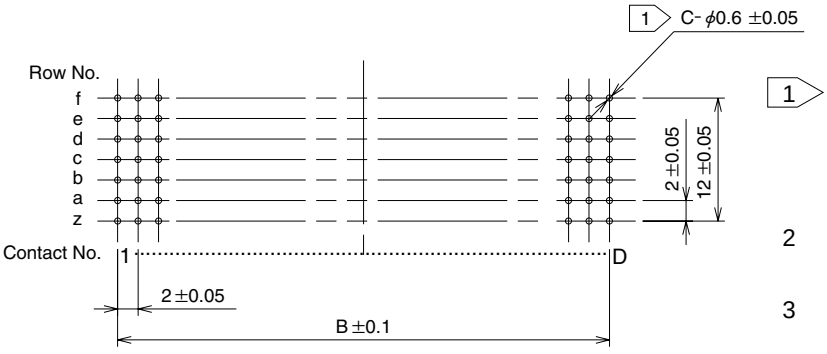

1 Plated through hole
Drilled diameter : φ0.7±0.02
Finished diameter : φ0.6±0.05
Plating : Cu 25μmin

2 Without ground terminal types, row f and z are not needed.

3 Board thickness : 1.6 to 5.6 mm

Product No.	A	B	C	D	No. of contacts	Mounting side
PCN21∗-125PB-2PF	49.95	48	125	25	5	Short pin
PCN21∗-125PB-2PF-G	49.95	48	175	25	7	
PCN21∗-110PB-2PF	49.95	42	110	22	5	
PCN21∗-110PB-2PF-G	49.95	42	154	22	7	
PCN21∗- 95PB-2PF	37.95	36	95	19	5	
PCN21∗- 95PB-2PF-G	37.95	36	133	19	7	
PCN21∗-125PB-2W	43.95	48	125	25	5	Long pin
PCN21∗-125PB-2W-G	43.95	48	175	25	7	
PCN21∗-110PB-2W	43.95	42	110	22	5	
PCN21∗-110PB-2W-G	43.95	42	154	22	7	
PCN21∗- 95PB-2W	37.95	36	95	19	5	
PCN21∗- 95PB-2W-G	37.95	36	133	19	7	

∗A: PCB leads gold plated B: PCB leads tin plated

The product information in this catalog is for reference only. Please request the Engineering Drawing for the most current and accurate design information.
All non-RoHS products have been discontinued, or will be discontinued soon. Please check the products status on the Hirose website RoHS search at www.hirose-connectors.com, or contact your Hirose sales representative.

■Header (Style C) [Backplane side male connector, 5 row]

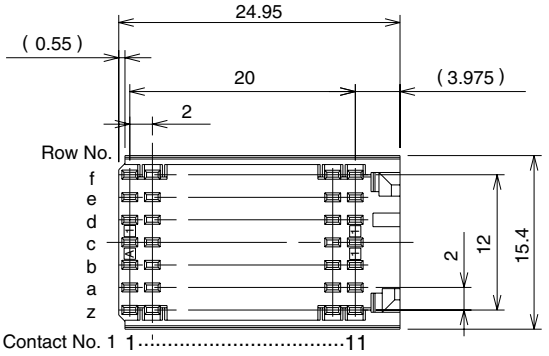

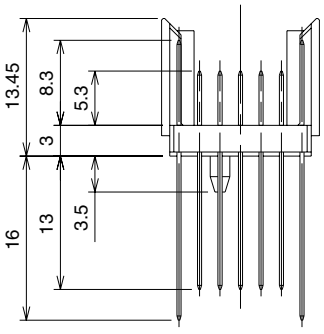

< Long pin >

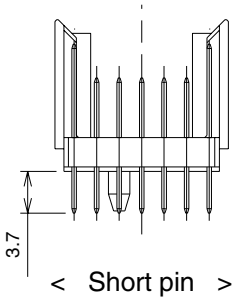

< Short pin >

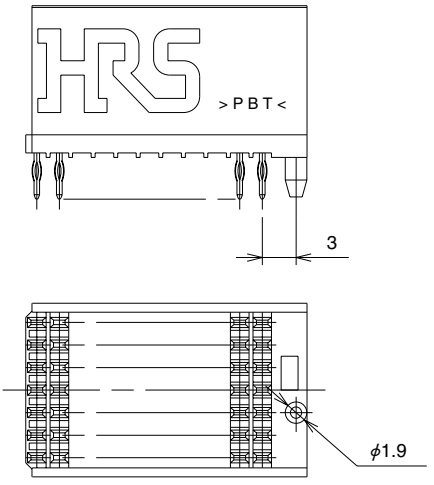

◆Recommended PCB mounting pattern

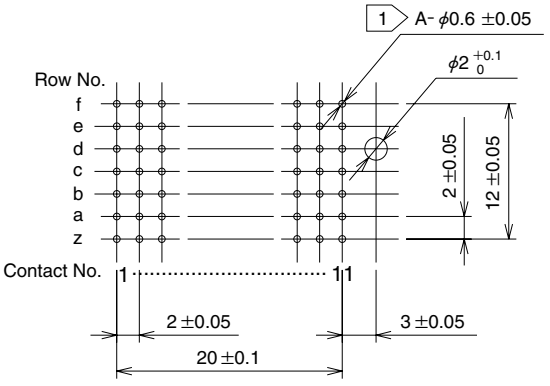

1 Plated through hole
Drilled diameter : ϕ0.7±0.02
Finished diameter : ϕ0.6±0.05
Plating : Cu 25μmin

2 Without ground terminal types, row f and z are not needed.

3 Board thickness : 1.6 to 5.6 mm

Part number .	A	No. of contacts	Mounting side
PCN21∗-55PC-2PF	55	5	Short pin
PCN21∗-55PC-2PF-G	77	7	
PCN21∗-55PC-2W	55	5	Long pin
PCN21∗-55PC-2W-G	77	7	

∗A: PCB leads gold plated B: PCB leads tin plated

The product information in this catalog is for reference only. Please request the Engineering Drawing for the most current and accurate design information.
All non-RoHS products have been discontinued, or will be discontinued soon. Please check the products status on the Hirose website RoHS search at www.hirose-connectors.com, or contact your Hirose sales representative.

■Header (Style D) [Backplane side male connector, 8 row]

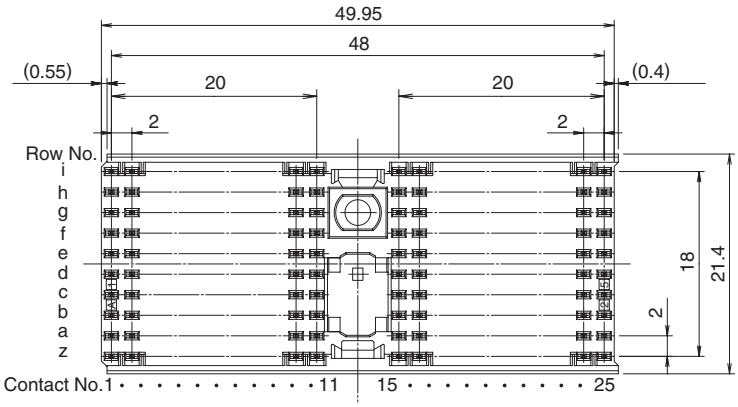

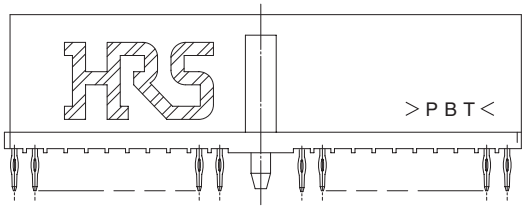

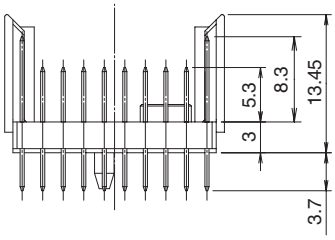

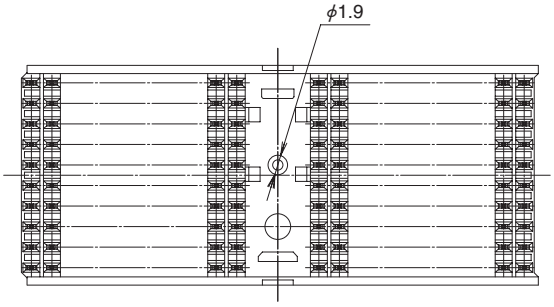

◆Recommended PCB mounting pattern

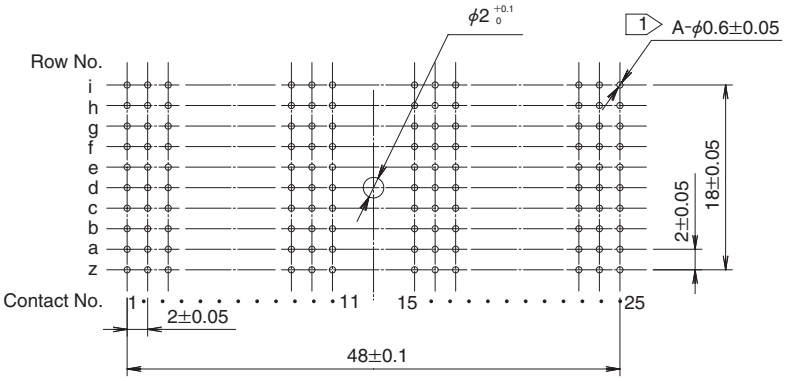

1 Plated through hole
Drilled diameter : ϕ0.7±0.02
Finished diameter : ϕ0.6±0.05
Plating : Cu 25μmin

2 Without ground terminal types, row i and z are not needed.

3 Board thickness : 1.6 to 5.6 mm

Part number	A	No. of contacts	Mounting side
PCN21B-176PD-2PF	176	8	Short pin
PCN21B-176PD-2PF-G	220	10	

The product information in this catalog is for reference only. Please request the Engineering Drawing for the most current and accurate design information.
All non-RoHS products have been discontinued, or will be discontinued soon. Please check the products status on the Hirose website RoHS search at www.hirose-connectors.com, or contact your Hirose sales representative.

■Header (Style E) [Backplane side male connector, 8 row]

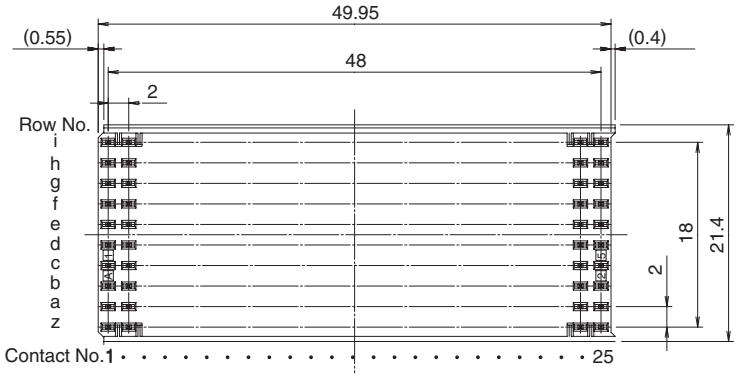

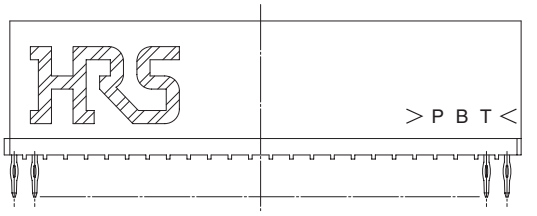

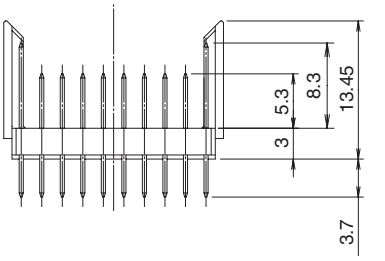

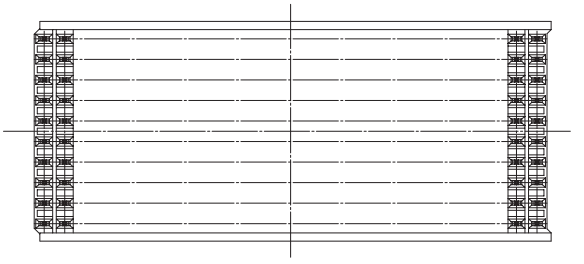

◆Recommended PCB mounting pattern

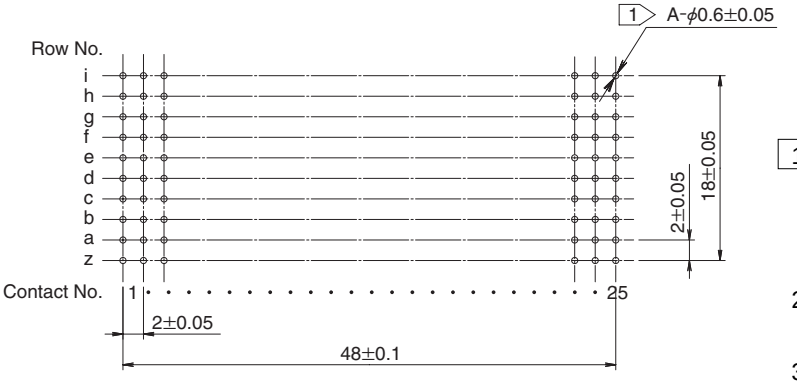

1 Plated through hole
Drilled diameter : ϕ0.7±0.02
Finished diameter : ϕ0.6±0.05
Plating : Cu 25μmin

2 Without ground terminal types, row i and z are not needed.

3 Board thickness : 1.6 to 5.6 mm

Part number	A	No. of contacts	Mounting side
PCN21B-200PE-2PF	200	8	Short pin
PCN21B-200PE-2PF-G	250	10	

The product information in this catalog is for reference only. Please request the Engineering Drawing for the most current and accurate design information.
All non-RoHS products have been discontinued, or will be discontinued soon. Please check the products status on the Hirose website RoHS search at www.hirose-connectors.com, or contact your Hirose sales representative.

■Header (Style M) [Backplane side connector, 5 row]

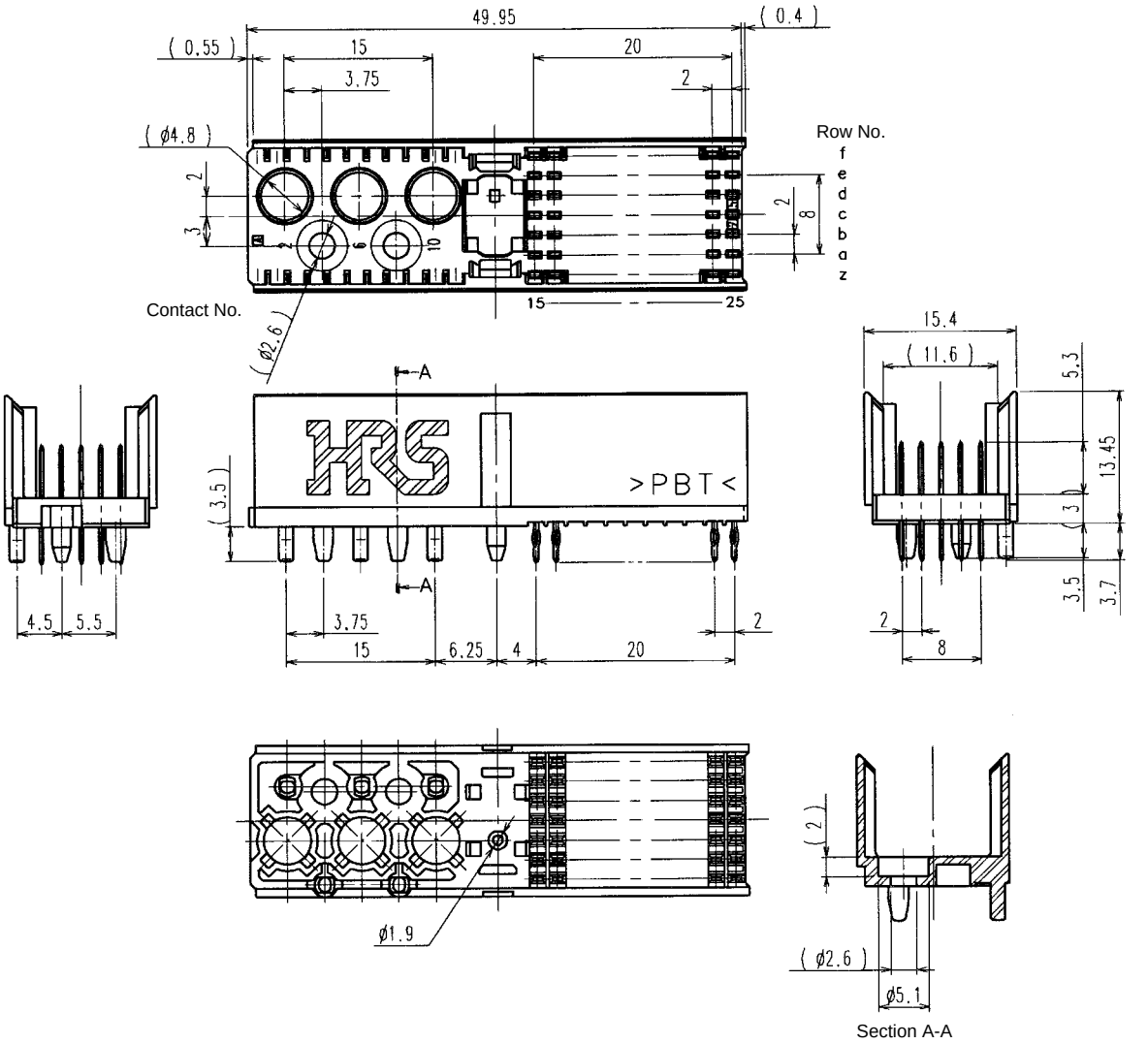

◆Recommended PCB mounting pattern

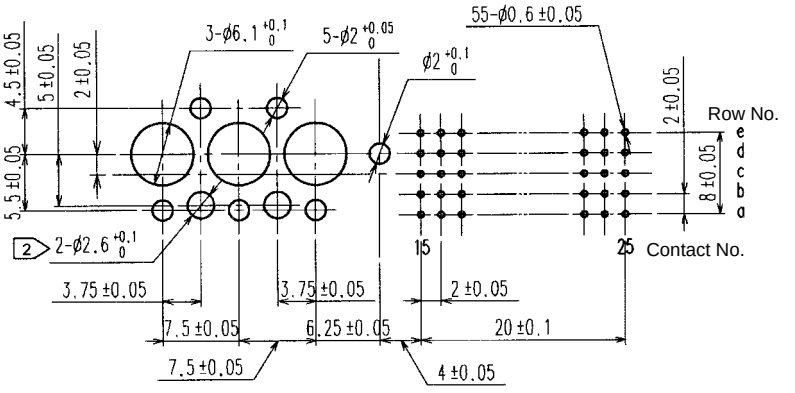

1 Plated through hole
Drilled diameter : φ0.7±0.02
Finished diameter : φ0.6±0.05
Plating : Cu 25μmin
2 Optional for screw clamp
3 Board thickness : 1.6 to 5.6mm

Part number	No. of contacts	Mounting side
PCN21∗-55PM-2PF	5	Short Pin

∗A: PCB leads gold plated B: PCB leads tin plated

The product information in this catalog is for reference only. Please request the Engineering Drawing for the most current and accurate design information.
All non-RoHS products have been discontinued, or will be discontinued soon. Please check the products status on the Hirose website RoHS search at www.hirose-connectors.com, or contact your Hirose sales representative.

■Header (Type AB) [Backplane side male connector, 5 row]

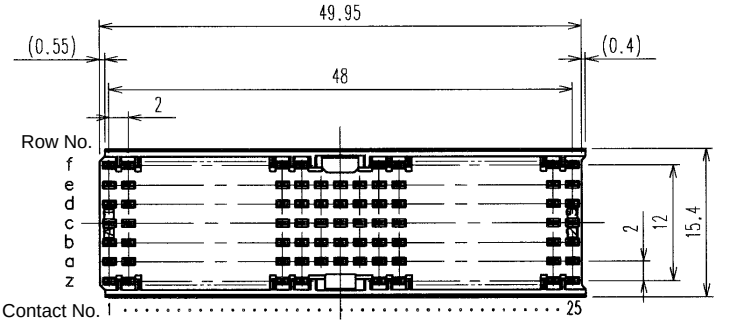

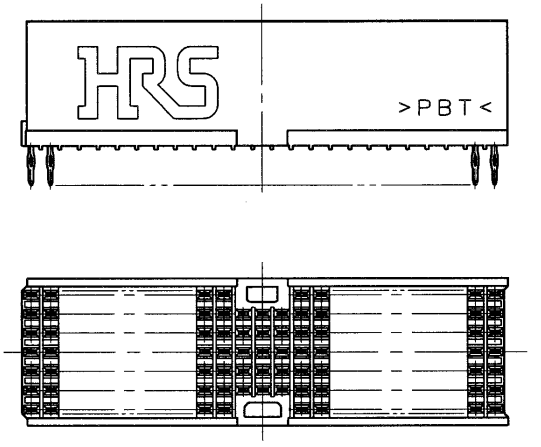

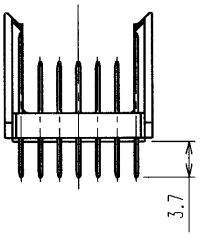

<Short pin>

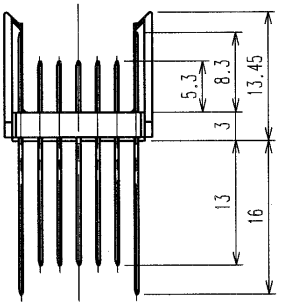

<Long pin>

◆Recommended PCB mounting pattern

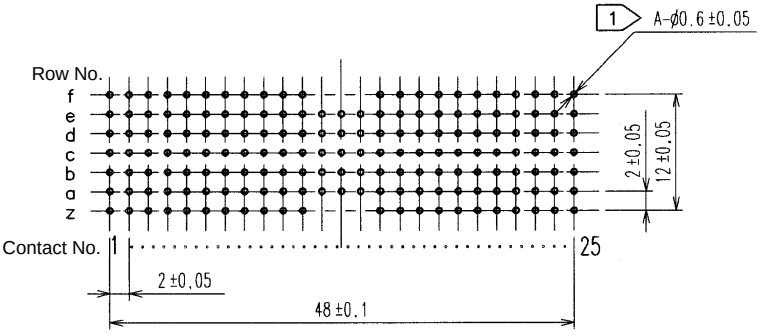

1 Plated through hole
Drilled diameter : φ0.7±0.02
Finished diameter : φ0.6±0.05
Plating : Cu 25μmin

2 Without ground terminal types, row f and z are not needed.

3 Board thickness : 1.6 to 5.6 mm

Part number	A	No. of contacts	Mounting side
PCN21∗-125PAB-2PF	125	5	Short Pin
PCN21∗-125PAB-2PF-G	169	7	
PCN21∗-125PAB-2W	125	5	Long Pin
PCN21∗-125PAB-2W-G	169	7	

∗A: PCB leads gold plated B: PCB leads tin plated

The product information in this catalog is for reference only. Please request the Engineering Drawing for the most current and accurate design information.
All non-RoHS products have been discontinued, or will be discontinued soon. Please check the products status on the Hirose website RoHS search at www.hirose-connectors.com, or contact your Hirose sales representative.

■ Receptacle (Style A) [Package side female connector, 5 row]

< With ground plate >

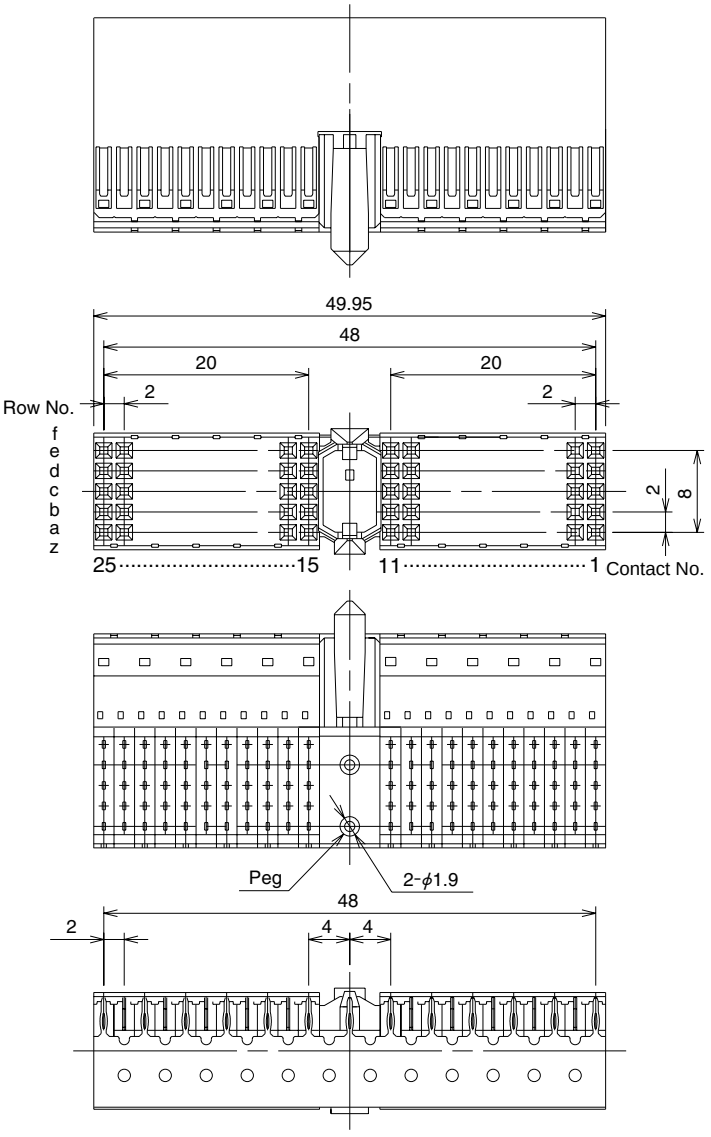

< Without ground plate >

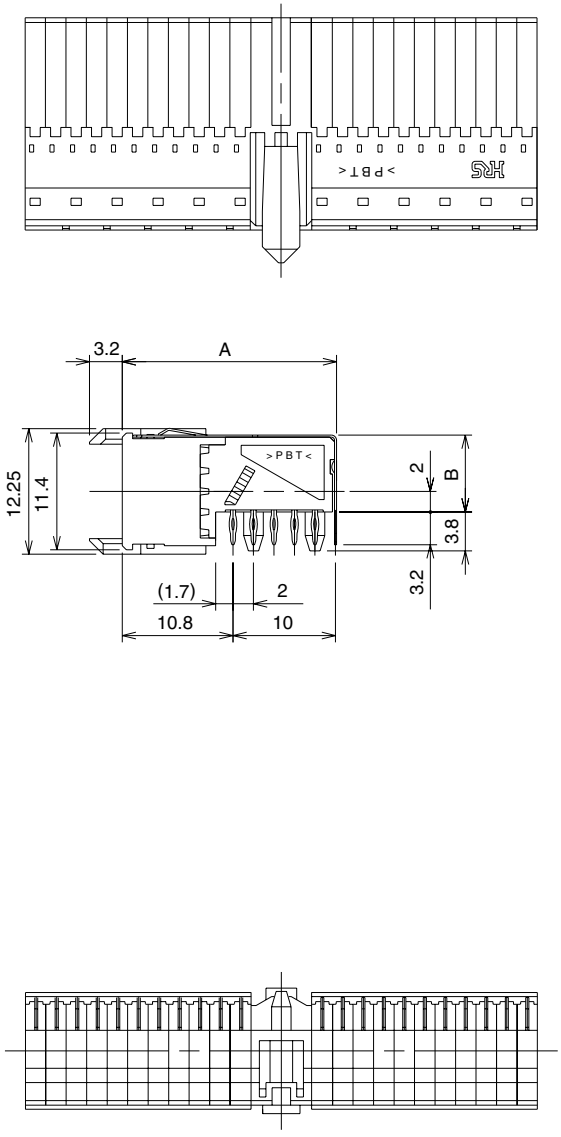

◆ Recommended PCB mounting pattern

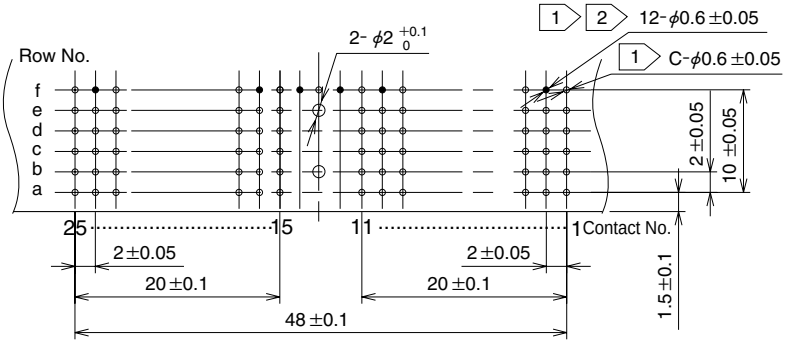

1 Plated through hole
Drilled diameter : ϕ0.7±0.02
Finished diameter : ϕ0.6±0.05
Plating : Cu 25μmin

2 Even numbers are required on the f row when using the lower surface ground plate (PCN21∗-SA-G).

3 Without ground terminal types, row f are not needed.

4 The type without the post does not require the 2mm dia, hole.

5 Board thickness: 1.6 to 4.2 mm

Part number	A	B	C	Ground plate	Post
PCN21∗-110SA-2PF	20.7	7.3	110	Without	With
PCN21∗-110SA-2PF-G	20.9	7.5	123	With	
PCN21∗-110SAA-2PF	20.7	7.3	110	Without	Without
PCN21∗-110SAA-2PF-G	20.9	7.5	123	With	

∗A: PCB leads gold plated (Ground plate mounting area : tin plated) B: PCB leads tin plated

The product information in this catalog is for reference only. Please request the Engineering Drawing for the most current and accurate design information.
All non-RoHS products have been discontinued, or will be discontinued soon. Please check the products status on the Hirose website RoHS search at www.hirose-connectors.com, or contact your Hirose sales representative.

■Receptacle (Style B) [Package side female connector, 5 row]

< With ground plate >

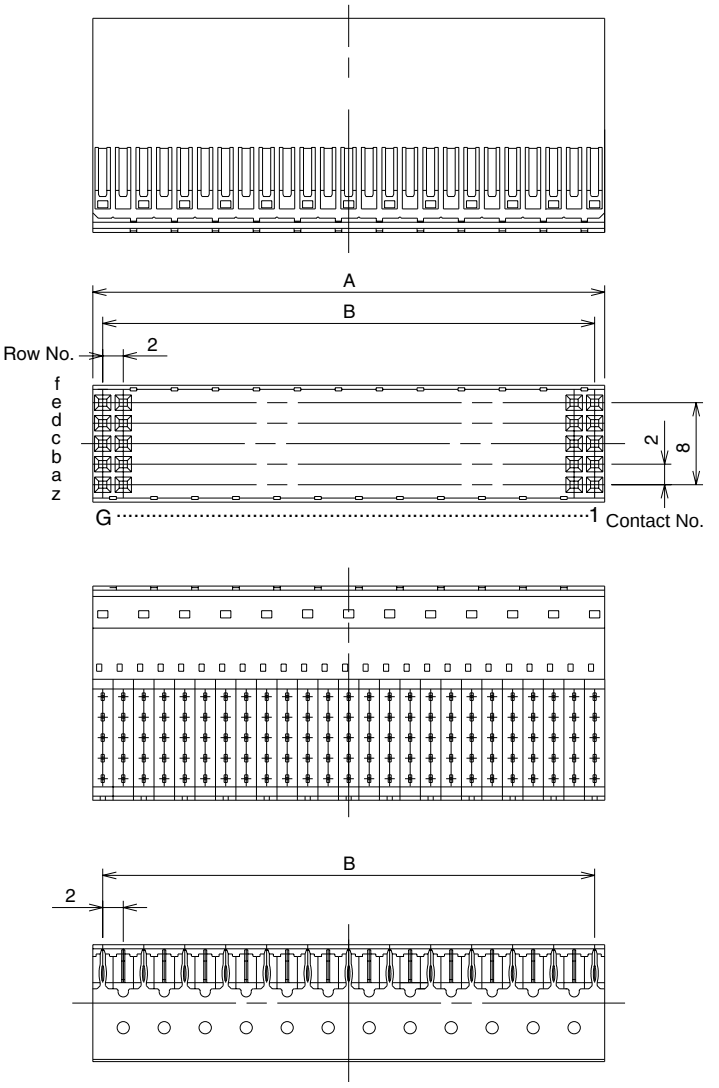

< Without ground plate >

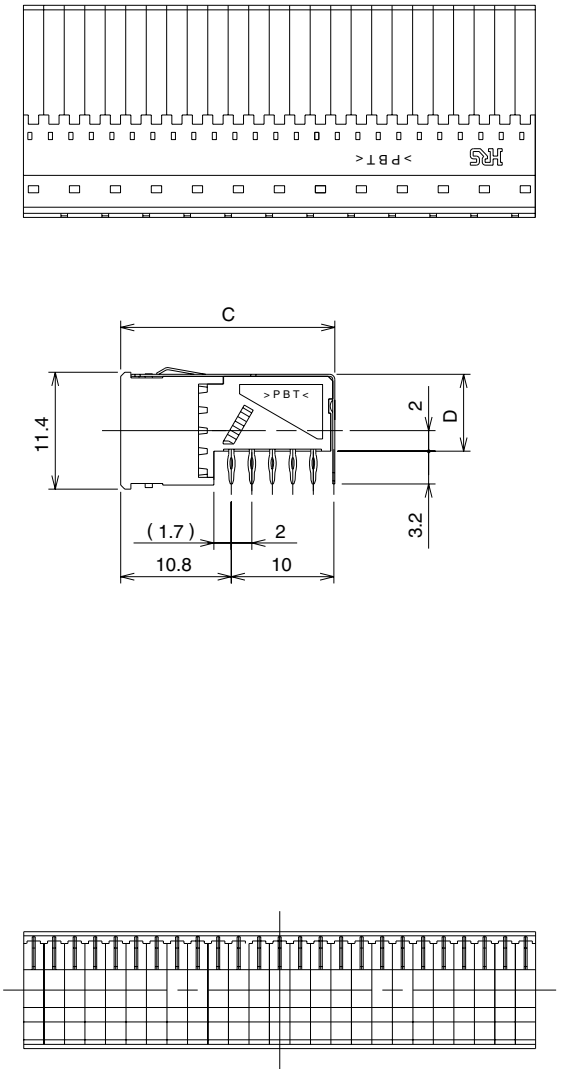

◆ Recommended PCB mounting pattern

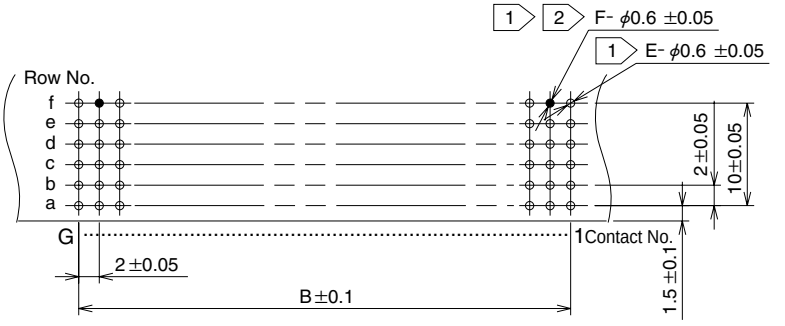

1 Plated through hole
Drilled diameter : φ0.7±0.02
Finished diameter : φ0.6±0.05
Plating : Cu 25μmin

2 Even numbers are required on the f row when using the lower surface ground plate (PCN21∗-SB-G).

3 Without ground terminal types, row f are not needed.

4 Board thickness: 1.6 to 4.2 mm

Part number	A	B	C	D	E	F	G	Ground plate
PCN21∗-125SB-2PF	49.95	48	20.7	7.3	125	–	25	Without
PCN21∗-125SB-2PF-G	49.95	48	20.9	7.5	138	12	25	With
PCN21∗-110SB-2PF	43.95	42	20.7	7.3	110	–	22	Without
PCN21∗-110SB-2PF-G	43.95	42	20.9	7.5	121	11	22	With
PCN21∗- 95SB-2PF	37.95	36	20.7	7.3	95	–	19	Without
PCN21∗- 95SB-2PF-G	37.95	36	20.9	7.5	105	9	19	With

∗A: PCB leads gold plated (Ground plate mounting area : tin plated) B: PCB leads tin plated

The product information in this catalog is for reference only. Please request the Engineering Drawing for the most current and accurate design information.
All non-RoHS products have been discontinued, or will be discontinued soon. Please check the products status on the Hirose website RoHS search at www.hirose-connectors.com, or contact your Hirose sales representative.

■ Receptacle (Style C) [Package side female connector, 5 row]

< With ground plate >

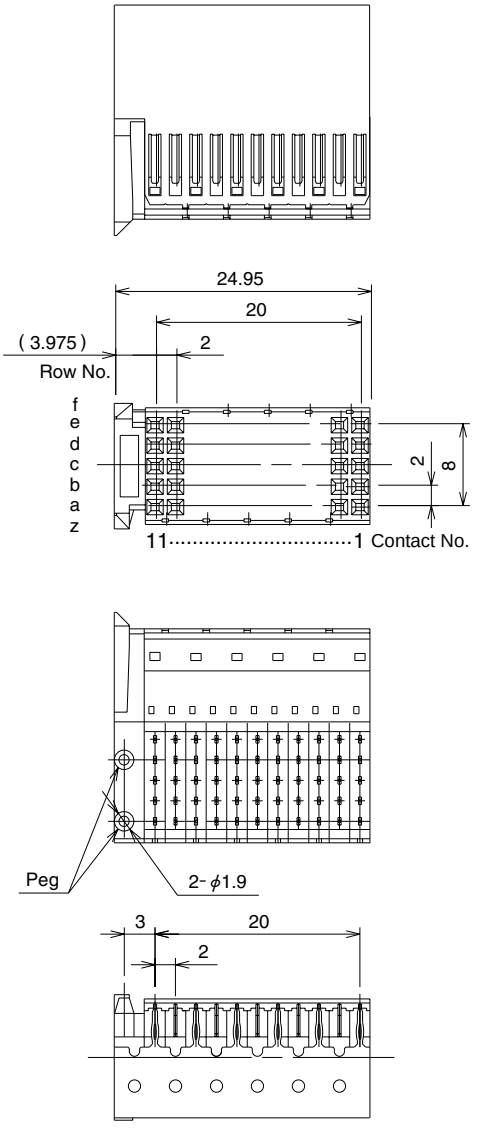

< Without ground plate >

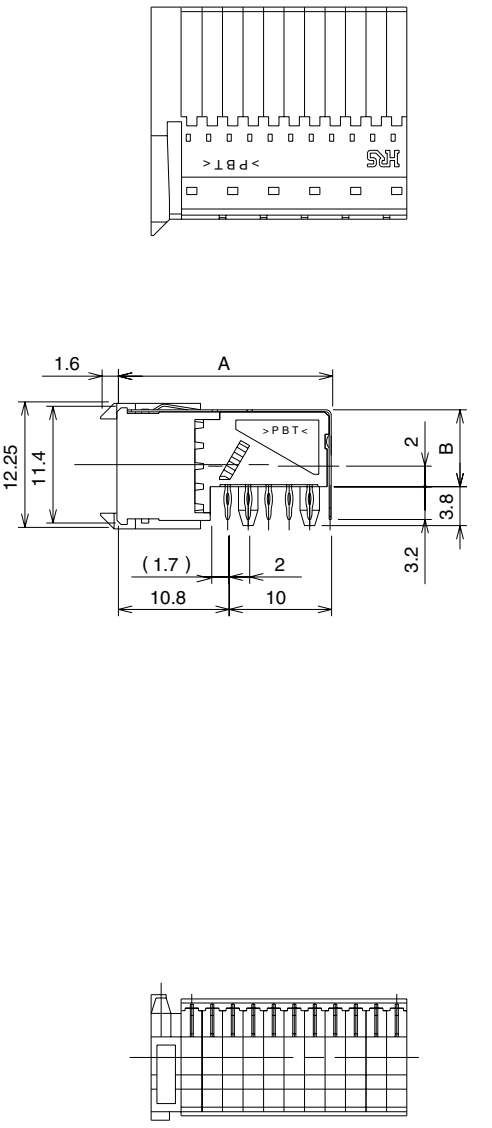

◆ Recommended PCB mounting pattern

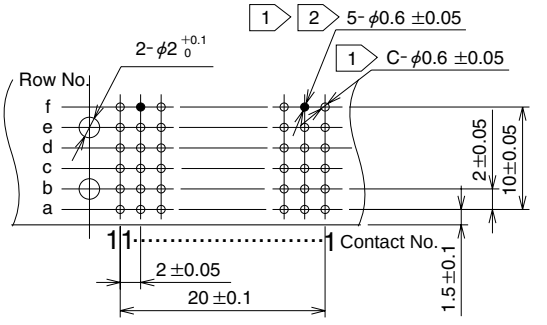

1 Plated through hole
Drilled diameter : ϕ0.7±0.02
Finished diameter : ϕ0.6±0.05
Plating : Cu 25μmin

2 Even numbers are required on the f row when using the lower surface ground plate (PCN21∗-SC-G).

3 Without ground terminal types, row f are not needed.

4 The type without the post does not require the 2mm dia, hole.

5 Board thickness: 1.6 to 4.2 mm

Part number	A	B	C	Ground plate	Post
PCN21∗-55SC-2PF	20.7	7.3	55	Without	With
PCN21∗-55SC-2PF-G	20.9	7.5	61	With	
PCN21∗-55SCA-2PF	20.7	7.3	55	Without	Without
PCN21∗-55SCA-2PF-G	20.9	7.5	61	With	

∗A: PCB leads gold plated (Ground plate mounting area : tin plated) B: PCB leads tin plated

The product information in this catalog is for reference only. Please request the Engineering Drawing for the most current and accurate design information.
All non-RoHS products have been discontinued, or will be discontinued soon. Please check the products status on the Hirose website RoHS search at www.hirose-connectors.com, or contact your Hirose sales representative.

■ Receptacle (Style D) [Package side female connector, 8 row]

<With ground plate>

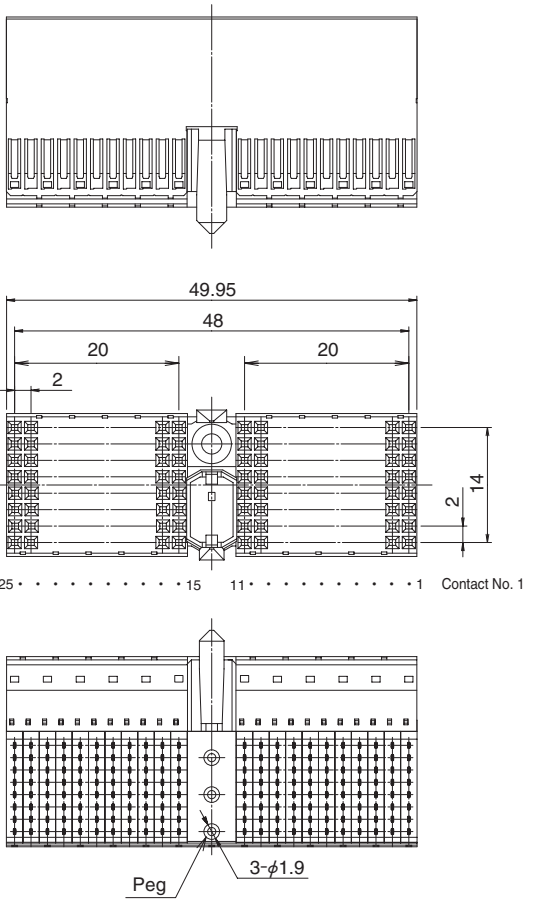

<Without ground plate>

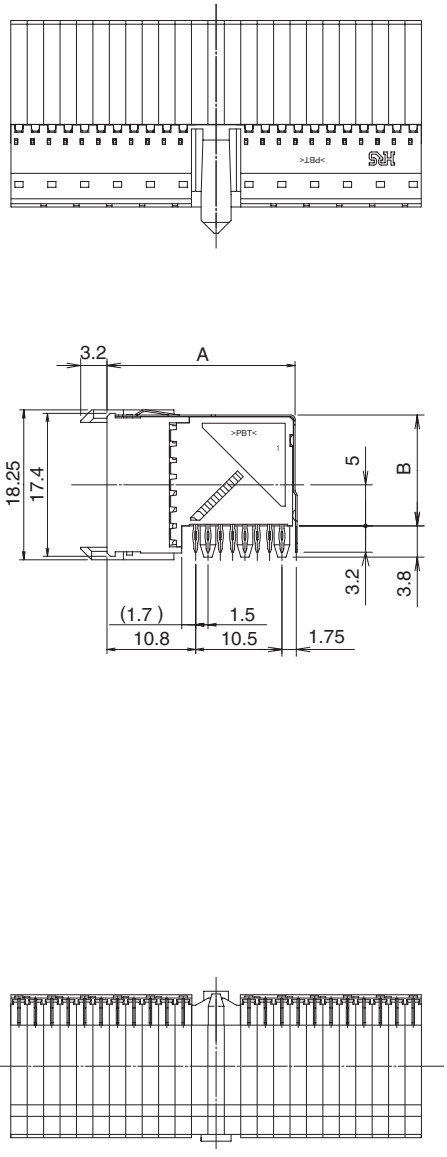

◆Recommended PCB mounting pattern

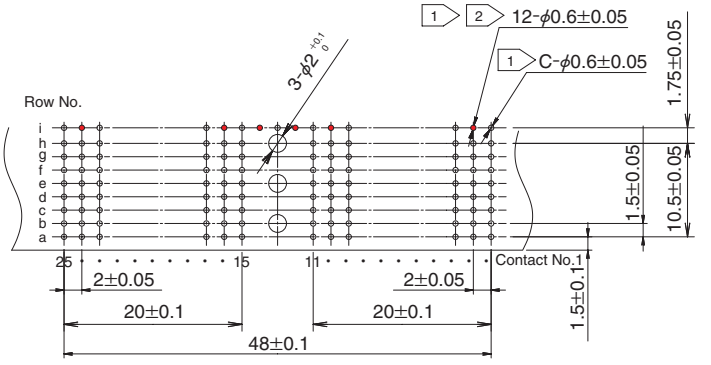

1 Plated through hole

Drilled diameter	: ϕ0.7±0.02
Finished diameter	: ϕ0.6±0.05
Plating	: Cu 25μmin

2 Even numbers are required on the i row when using the low surface ground plate (PCN21B-SE-G).

3 Without ground plate types, row i not needed.

4 Board thickness: 1.6 to 4.2mm

Part number	A	B	C	Ground plate
Through hole	22.7	13.3	176	Without
PCN21B-176SD-2PF-G	23.15	13.5	189	With

The product information in this catalog is for reference only. Please request the Engineering Drawing for the most current and accurate design information.
All non-RoHS products have been discontinued, or will be discontinued soon. Please check the products status on the Hirose website RoHS search at www.hirose-connectors.com, or contact your Hirose sales representative.

■ Receptacle (Style E) [Package side female connector, 8 row]

<With ground plate>

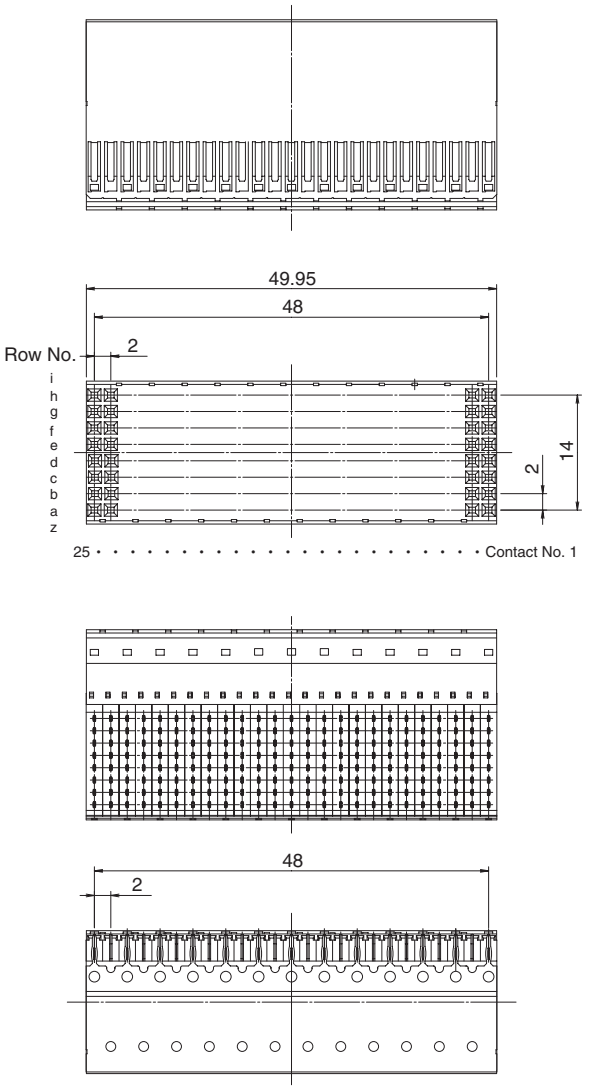

<Without ground plate>

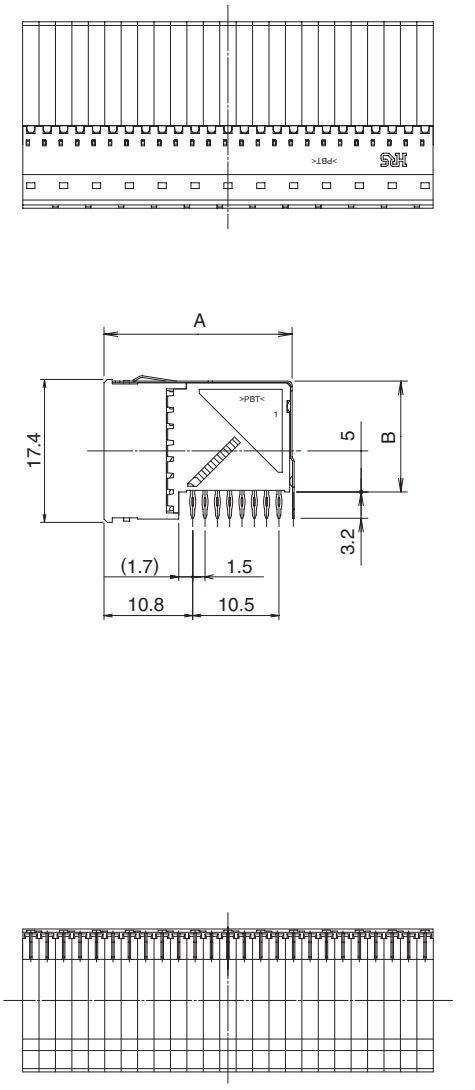

◆Recommended PCB mounting pattern

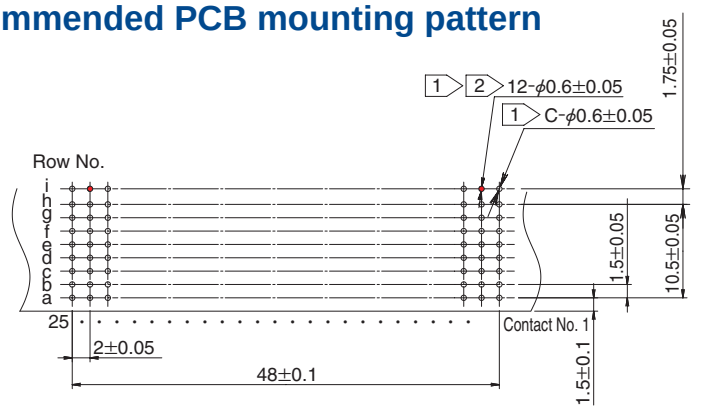

1 Plated through hole

Drilled diameter	: ϕ0.7±0.02
Finished diameter	: ϕ0.6±0.05
Plating	: Cu 25μmin

2 Even numbers are required on the i row when using the low surface ground plate (PCN21B-SE-G).

3 Without ground plate types, row i not needed.

4 Board thickness: 1.6 to 4.2mm

Part number	A	B	C	Ground plate
PCN21B-200SE-2PF	22.7	13.3	200	Without
PCN21B-200SE-2PF-G	23.15	13.5	213	With

The product information in this catalog is for reference only. Please request the Engineering Drawing for the most current and accurate design information.
All non-RoHS products have been discontinued, or will be discontinued soon. Please check the products status on the Hirose website RoHS search at www.hirose-connectors.com, or contact your Hirose sales representative.

■ Receptacle (Style M) [Package side female connector, 5 row]

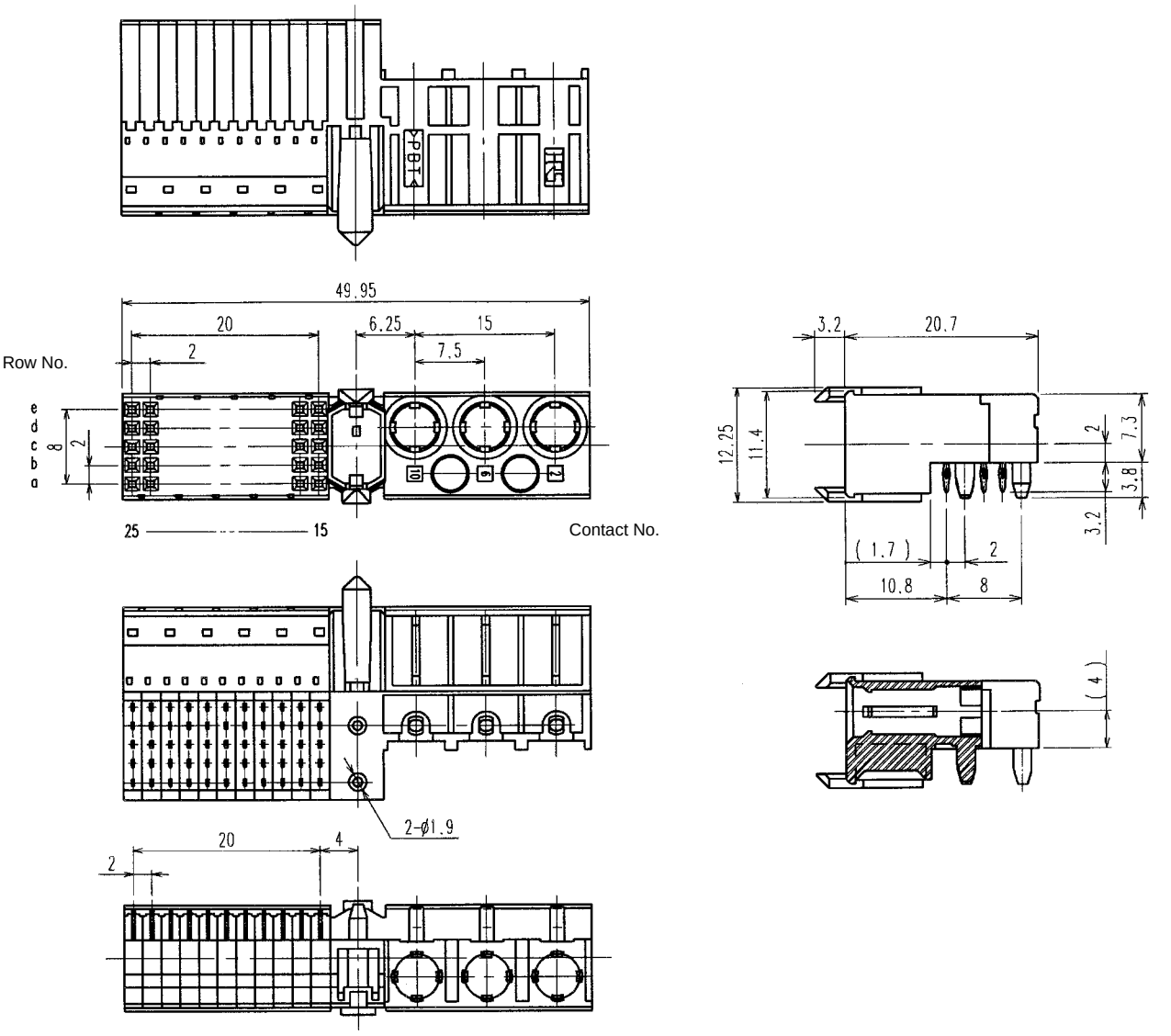

◆ Recommended PCB mounting pattern

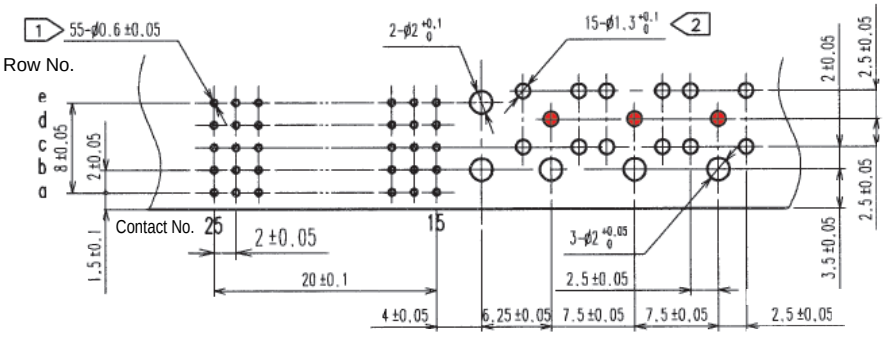

1 Plated through hole
Drilled diameter : ϕ0.7±0.02
Finished diameter : ϕ0.6±0.05
Plating : Cu 25μmin

2 Optional for high power contact (PCN21-S-PWR(PC)) and coaxial connector(PO51M-LPR-PC-1A). High power contact type, hole ● not needed.

3 Board thickness: 1.6 to 4.2 mm

Part number.	Ground plate	Post
PCN21∗-55SM-2PF	Without	With

∗A: PCB leads gold plated B: PCB leads tin plated

The product information in this catalog is for reference only. Please request the Engineering Drawing for the most current and accurate design information.
All non-RoHS products have been discontinued, or will be discontinued soon. Please check the products status on the Hirose website RoHS search at www.hirose-connectors.com, or contact your Hirose sales representative.

■ Receptacle (Type AB) [Package side female connector, 5 row]

<With ground plate>

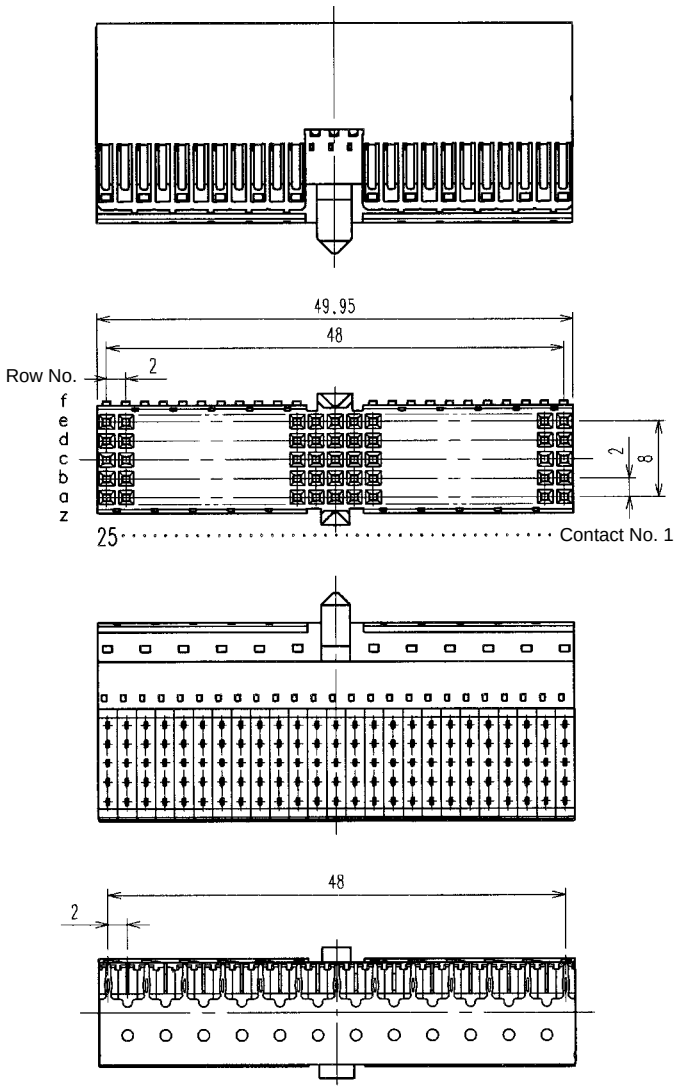

<Without ground plate>

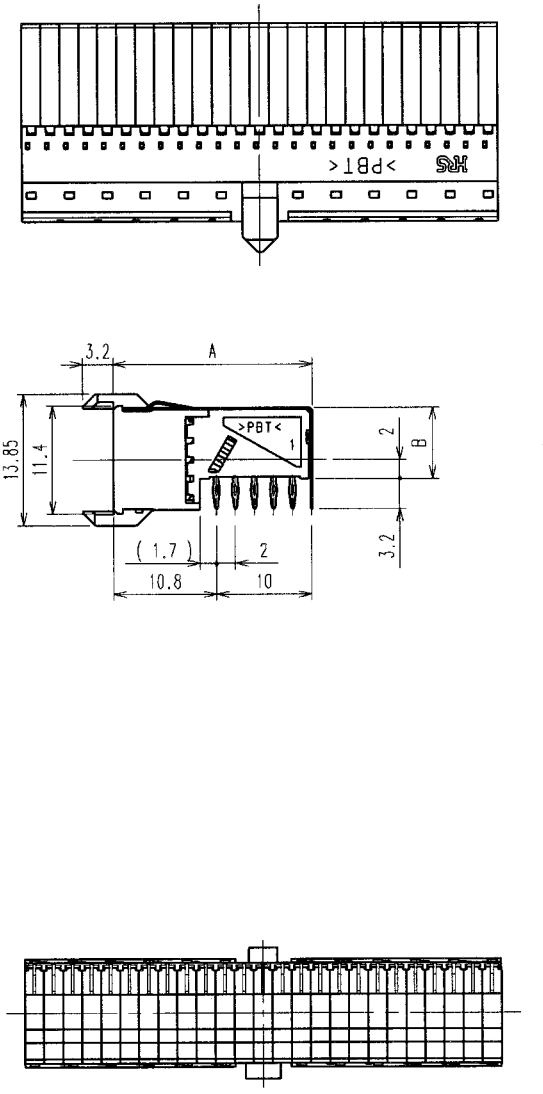

◆ Recommended PCB mounting pattern

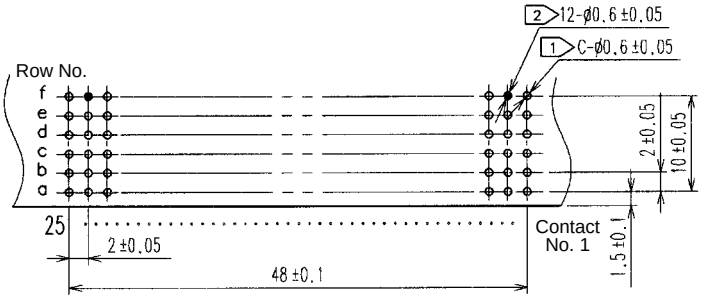

1 lated through hole
Drilled diameter : φ0.7±0.02
Finished diameter : φ0.6±0.05
Plating : Cu 25μmin

2 Even numbers are required on the f row when using the lower surface ground plate (PCN21∗-SA-G).

3 Without ground the plate types, rows f not needed.

4 Board thickness: 1.6 to 4.2 mm

Part number.	A	B	C	Ground plate
PCN21∗-125SAB-2PF	20.7	7.3	125	Without
PCN21∗-125SAB-2PF-G	20.9	7.5	138	With

∗A: PCB leads gold plated (Ground plate mounting area : tin plated) B: PCB leads tin plated

The product information in this catalog is for reference only. Please request the Engineering Drawing for the most current and accurate design information.
All non-RoHS products have been discontinued, or will be discontinued soon. Please check the products status on the Hirose website RoHS search at www.hirose-connectors.com, or contact your Hirose sales representative.

■Bottom ground plates for receptacles

PCN21∗-SA-G

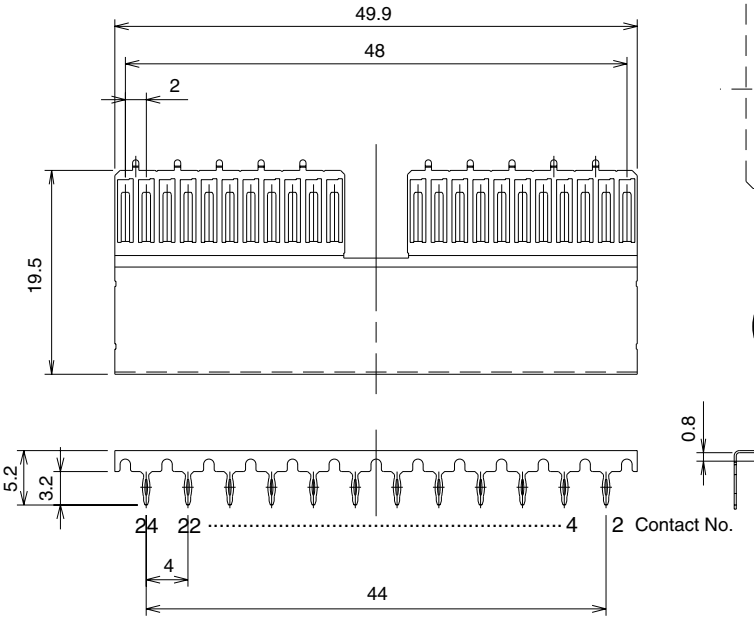

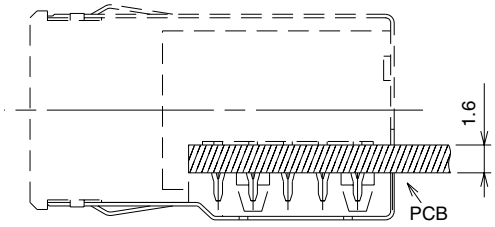

As installed on the board

(Install the ground plated after the connector is mounted on PCB.)

PCN21∗-SB-G
PCN21∗-SB1-G
PCN21∗-SB2-G

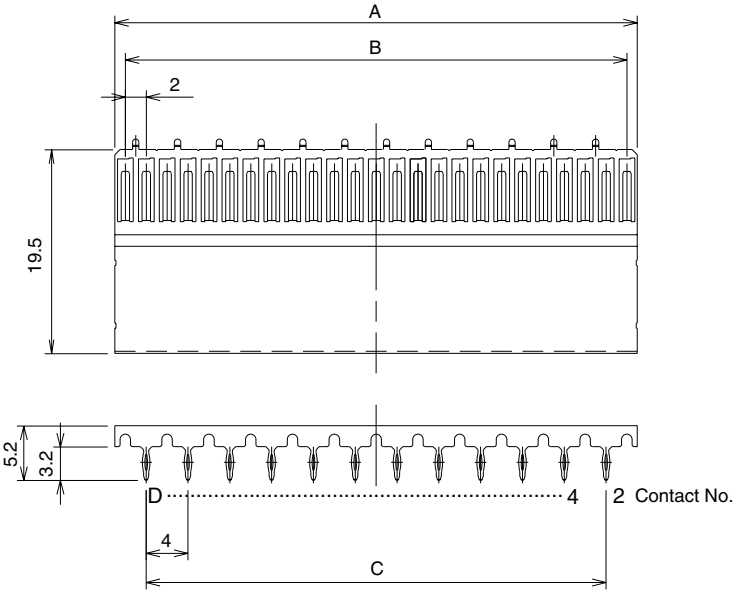

PCN21∗-SC-G

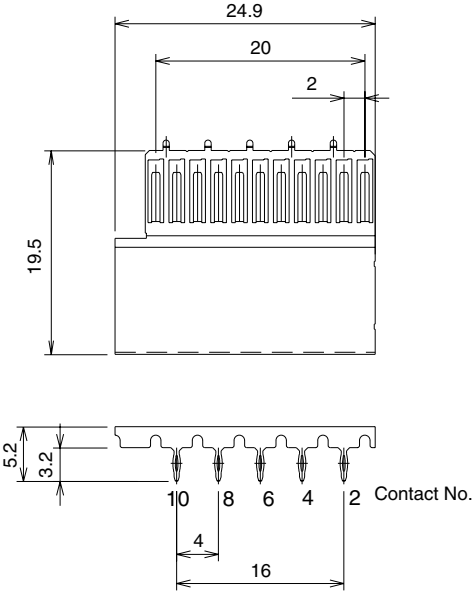

Product No.	A	B	C	D	Applicable connector
PCN21∗-SA-G	——	——	——	——	PCN21∗-110SA-2PF-G
PCN21∗-SB-G	49.9	48	44	24	PCN21∗-125SB-2PF-G
PCN21∗-SB1-G	43.9	42	40	22	PCN21∗-110SB-2PF-G
PCN21∗-SB2-G	37.9	36	32	18	PCN21∗- 95SB-2PF-G
PCN21∗-SC-G	——	——	——	——	PCN21∗- 55SC-2PF-G

∗A: PCB leads gold plated B: PCB leads tin plated

The product information in this catalog is for reference only. Please request the Engineering Drawing for the most current and accurate design information.
All non-RoHS products have been discontinued, or will be discontinued soon. Please check the products status on the Hirose website RoHS search at www.hirose-connectors.com, or contact your Hirose sales representative.

PCN21B-SD-G

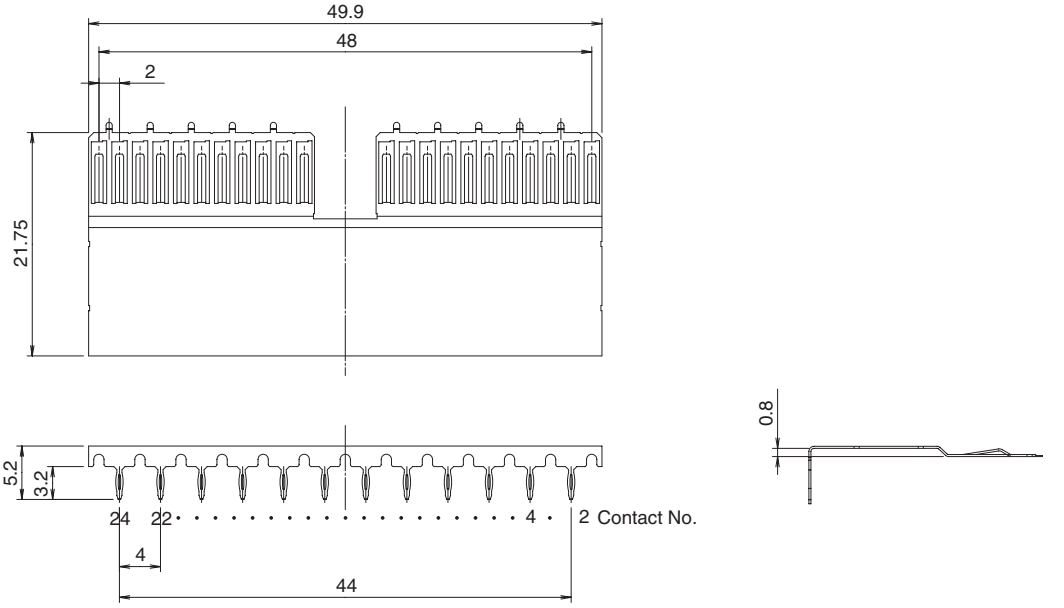

PCN21B-SE-G

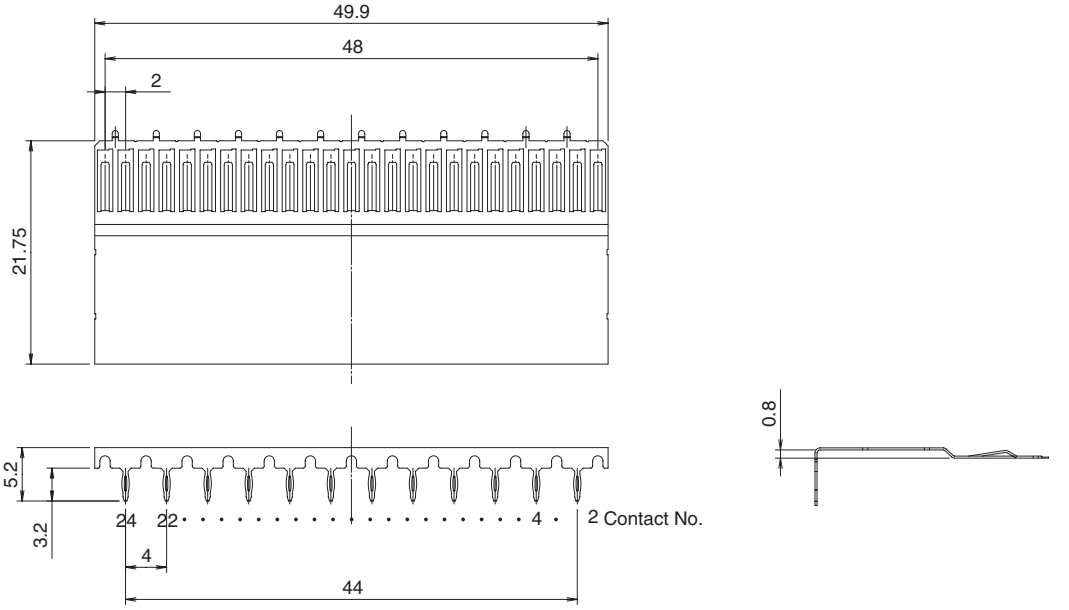

Product No.	Applicable connector
PCN21B-SD-G	PCN21B-176SD-2PF-G
PCN21B-SE-G	PCN21B-200SE-2PF-G

The product information in this catalog is for reference only. Please request the Engineering Drawing for the most current and accurate design information.
All non-RoHS products have been discontinued, or will be discontinued soon. Please check the products status on the Hirose website RoHS search at www.hirose-connectors.com, or contact your Hirose sales representative.

■Mid-plane (Shroud)

[Style A]

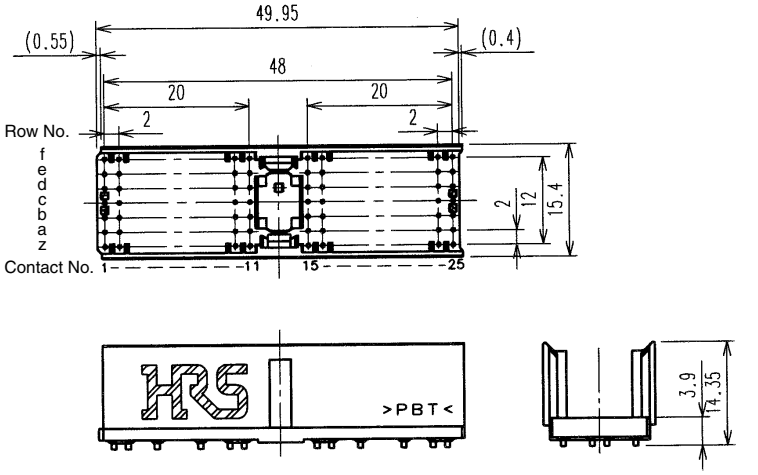

[Style B]

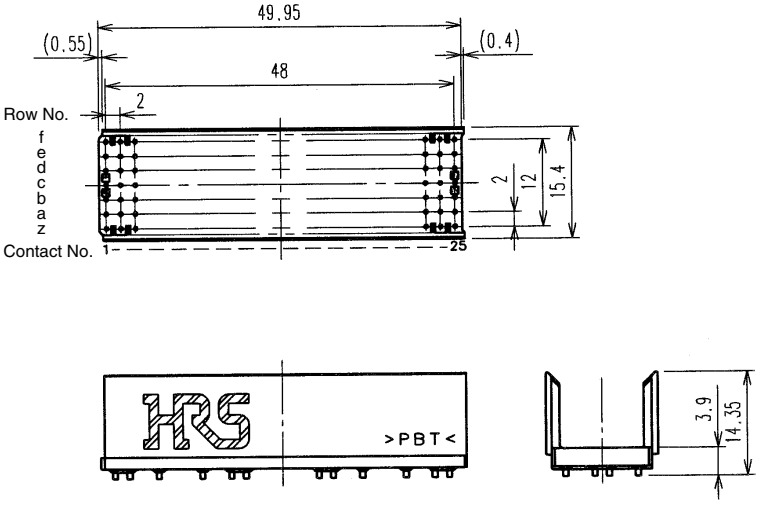

Style	Part number	Applicable connector
A	PCN21-110PA-2C1	PCN21∗-110PA-2W(-G)
B	PCN21-125PB-2C1	PCN21∗-125PB-2W(-G)
C	PCN21- 55PC-2C1	PCN21∗- 55PC-2W(-G)
AB	PCN21-125PAB-2C	PCN21∗-125PAB-2W(-G)

The product information in this catalog is for reference only. Please request the Engineering Drawing for the most current and accurate design information.
All non-RoHS products have been discontinued, or will be discontinued soon. Please check the products status on the Hirose website RoHS search at www.hirose-connectors.com, or contact your Hirose sales representative.

■Mid-plane (Shroud)

[Style C]

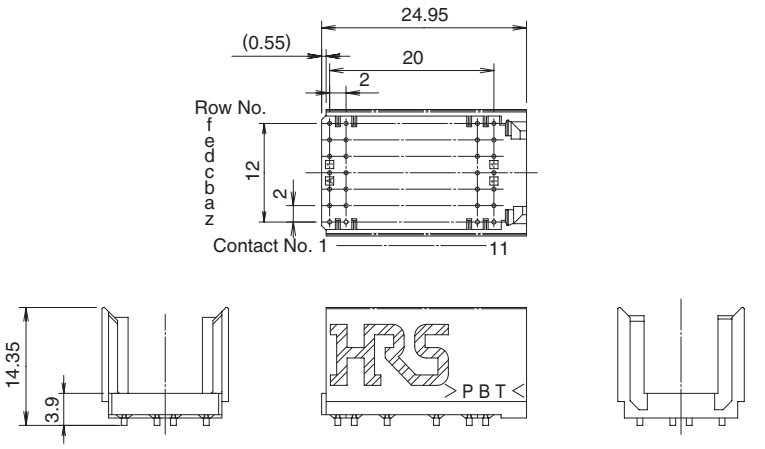

[Type AB]

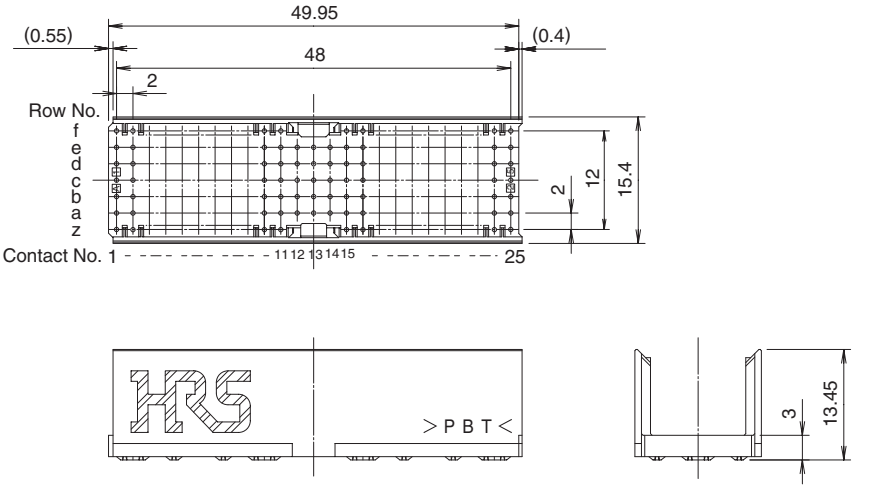

◆Assemblied condition

Back-plane contact length: 13mm (Example)

A	Back-plane contact length	13	13
B	Shroud height	3.9	3
C	PCB thickness	2.3	3.2
D	Shroud mating contact length	6.8	6.8

Shroud mating contact length: 6.8mm (Example)

E	Shroud mating contact length	6.8	6.8
F	Shroud height	3.9	3
G	Back-plane contact length	13	13
H	PCB thickness	2.3	3.2

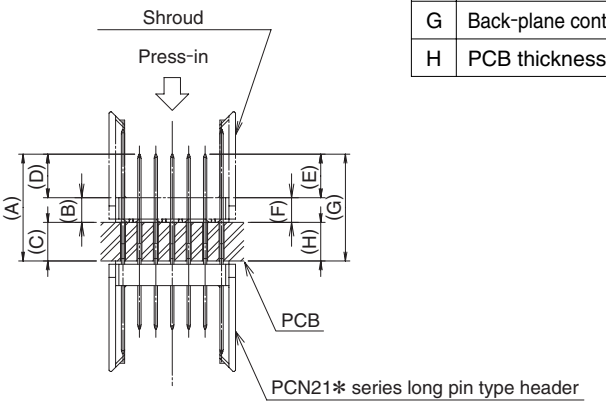

The product information in this catalog is for reference only. Please request the Engineering Drawing for the most current and accurate design information.
All non-RoHS products have been discontinued, or will be discontinued soon. Please check the products status on the Hirose website RoHS search at www.hirose-connectors.com, or contact your Hirose sales representative.

■Coding keys

Installed on Style A, D, M to prevent improper insertion.

For header

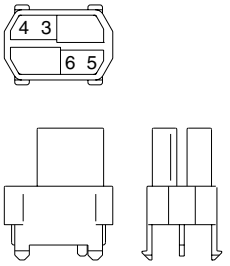

For receptacle

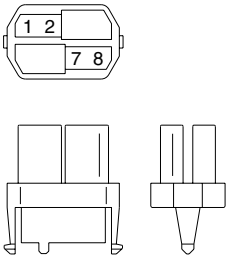

For header		For receptacle		Color	Remarks
Part number	Type	Part number	Type		
PCN21-P-CK(A)	3456	PCN21-S-CK(A)	1278	Yellow	Supports compact PCI 3.3V
PCN21-P-CK(B)	1567	PCN21-S-CK(B)	2348	Blue	Supports compact PCI 5V
PCN21-P-CK(D)	1248	PCN21-S-CK(D)	3567	Red	
PCN21-P-CK(F)	2578	PCN21-S-CK(F)	1346	Breen	
PCN21-P-CK(G)	3467	PCN21-S-CK(G)	1258	Gray	
PCN21-P-CK(I)	3568	PCN21-S-CK(I)	1247	Orange	

◆Header contact

Custom support for header sequencial contacts is available. Contact a Hirose sales representative. Use of rows of contacts having the same length is recommended.

Contact code A B C K L M N P Q R S T

PKG side

BWB side

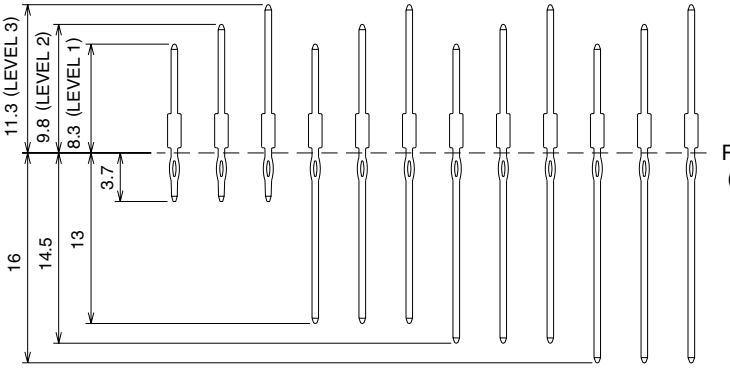

Reference plane
(Connector termination side)

◆Mating conditions

●Lateral and longitudinal mating tolerance

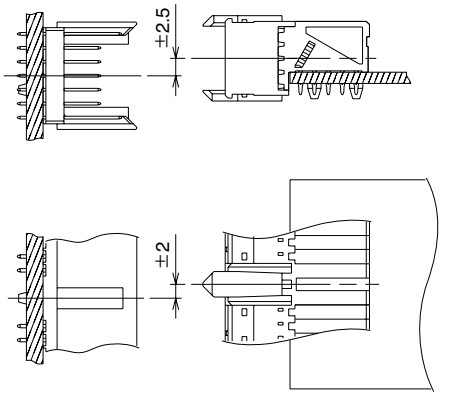

●Angular tolerance

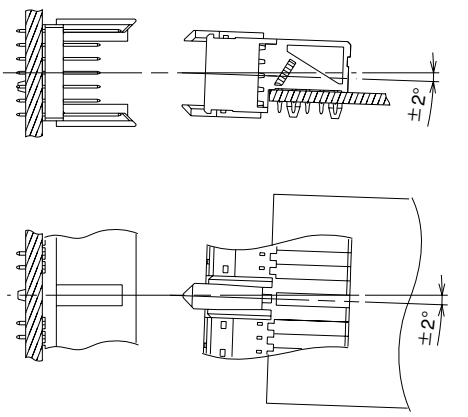

The product information in this catalog is for reference only. Please request the Engineering Drawing for the most current and accurate design information.
All non-RoHS products have been discontinued, or will be discontinued soon. Please check the products status on the Hirose website RoHS search at www.hirose-connectors.com, or contact your Hirose sales representative.

■High power contact

PCN21-P-PWR(20A)

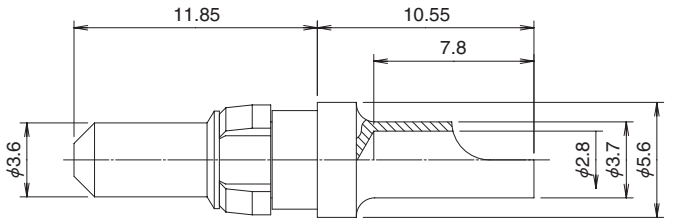

PCN21-S-PWR(PC)

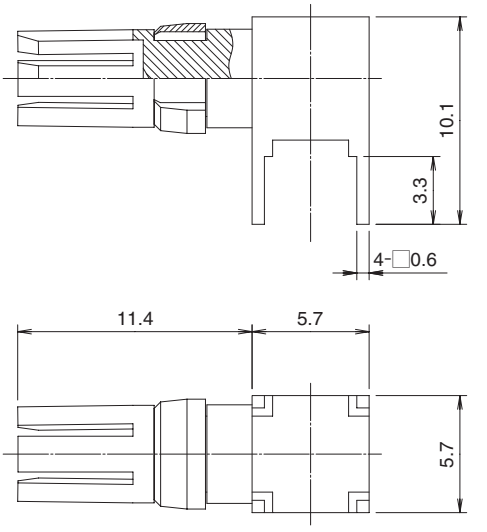

Part number	Power	Applicable connector
PCN21-P-PWR(20A)	20A(70℃)	PCN21∗-55PM-2PF
PCN21-S-PWR(PC)	20A(70℃)	PCN21∗-55SM-2PF

■Coaxial connector

Part number	Characteristic impedance	Applicable cable	Applicable connector
PO51M-J-1.5W	50Ω	1.5D-HQEW, 1.5D-2W or equivalent	PCN21∗-55PM-2PF
PO51M-J-1.5	50Ω	1.5D-HQEV, 1.5D-2V or equivalent	PCN21∗-55PM-2PF
PO82M-J-1.5C	75Ω	1.5C-QEV, 1.5C-2V or equivalent	PCN21∗-55PM-2PF
PO51M-LJ-1.5W	50Ω	1.5D-HQEW, 1.5D-2W or equivalent	PCN21∗-55PM-2PF
PO51M-LJ-1.5	50Ω	1.5D-HQEV, 1.5D-2V or equivalent	PCN21∗-55PM-2PF
PO51M-LJ-178-1	50Ω	RG-178B/U	PCN21∗-55PM-2PF
PO51M-P-1.5W	50Ω	1.5D-HQEW, 1.5D-2W or equivalent	PCN21∗-55SM-2PF
PO51M-P-1.5	50Ω	1.5D-HQEV, 1.5D-2V or equivalent	PCN21∗-55SM-2PF
PO82M-P-1.5C	75Ω	1.5C-QEV, 1.5C-2V or equivalent	PCN21∗-55SM-2PF
PO51M-LPR-PC-1A	50Ω	——	PCN21∗-55SM-2PF

Refer to PO21M, PO51M, PO82M series for dimensions.

■High power contact, coaxial connector extraction tools

	Part number
For PCN21∗-55PM-2PF	PO51J-T-1
For PCN21∗-55SM-2PF	PO51MP-T-1