# MIL-DTL-38999 Circular Connectors

## And 38999-Style Connectors

Withstand Harsh Environments with Rugged, Capable Connectors for Signal, Power, Control, and Optical Needs

**INTRODUCTION** 4

**MIL-DTL-38999 CONNECTORS**

Series I 18
Series III 30
Series IV 44

**MIL-DTL-38999 SERIES III STYLE CONNECTORS**

**Panel Seals** 56
**Hermetic Connectors** 62
**PCB Connectors**
Board-Mount 38999 Connectors 65
**Marine Connectors**
DEUTSCH DTS-B Connectors 102
**Band It Platform Connectors**
Aluminum and Stainless Steel Connectors with Integral Backshells 110
**Power Connectors**
DEUTSCH DTS-HC Connectors 120
POLAMCO Connectors 125
**Lanyard Connectors**
1760 Series Connectors (MIL-DTL-38999/31 and ACT98 and commercial /29) 137
**Ultra-Dense Connectors**
DEUTSCH Wildcat 38999 Connectors 138
**38999 Series 1.5 Connectors**
DEUTSCH HDJ/JN1003 Series Connectors 144
**High-Speed Connectors**
Quadrax Connectors 156
CeeLok FAS-X Connectors 173
**High-Speed COTS Interface Connectors**
POLAMCO USB Connectors 186
POLAMCO RJ45 Connectors 189
**Fiber-Optic Connectors**
Introduction 193
MC801 Connectors 195
DEUTSCH MC3 MKII Connectors 199
DEUTSCH MC4 Connectors 205
DEUTSCH MC5 Connectors 211
DEUTSCH MC6 Connectors 217
AviMT Connectors 224
38999-Style Connectors 226
PRO BEAM Inserts 233
MIL-T-29504 Style Optical Termini 235
**Backshells and Rear Accessories** 237
**Specialty Connectors**
DEUTSCH CBC Bussed Connectors 281
**Assembly Instructions** 286



**TE Components . . . TE Technology . . . TE Know-how . . .**

AMP | AGASTAT | CII | HARTMAN | KILOVAC | MICRODOT | NANONICS | POLAMCO | Raychem
SEACON | Rochester | DEUTSCH

Empower Engineers to Solve Problems, Moving the World Forward.

## MIL-DTL-38999 Connectors

| MIL-DTL-38999 Series | Coupling | DEUTSCH Connector Family | Shell Material |
|---|---|---|---|
| Series I | Bayonet | DJT | Aluminum |
| Series III | Threaded | DTS | Aluminum |
| | | DTS-K, DTS-L, DTS-S | Stainless steel |
| | | ACT | Composite |
| Series IV | Breech lock | DIV | Aluminum |

## MIL-DTL-38999 Series III Style Connectors

| | |
|---|---|
| **Marine Connectors** | |
| DEUTSCH DTS-B Connectors | Marine bronze shell |
| **High-Speed Connectors** | |
| Quadrax Connectors | 2 Gb/s |
| CeeLok FAS-X Connectors | 10 Gb/s, 1 or 4 Ethernet channels |
| **High-Speed COTS Interface Connectors** | |
| POLAMCO RJ45 Connectors | Cat 6a |
| POLAMCO USB Connectors | USB 2.0 and 3.0 |
| **Power Connectors** | |
| DEUTSCH DTS-HC Connectors | Up to 300 A |
| POLAMCO Connectors | Up to 1000 A |
| **Lanyard Connectors** | |
| 1760 Series Connectors (MIL-DTL-38999/31 and ACT98 and commercial /29) | MIL-STD-1760 Types 1 and 2 |
| **PCB Connectors** | |
| Board-Mount 38999 Connectors | |
| **Fiber-Optic Connectors** | |
| DEUTSCH MC3 MKII Connectors | DEUTSCH 2.5 mm termini |
| DEUTSCH MC4 Duplex Connectors | 2.5 mm termini, compact Size 9 shell |
| DEUTSCH MC5 Connectors | DEUTSCH 1.25 mm termini |
| DEUTSCH MC6 Connectors | MT ferrule |
| MC801 Connectors | ARINC 801 termini |
| QPL Connectors | MIL-PRF-29504/4 and /5 termini |
| EB16 Connectors | EB16 contacts |
| PRO BEAM Inserts | Expanded beam termini |
| **Ultra-Density Connectors** | |
| DEUTSCH Wildcat 38999 Connectors | Nearly twice the contact density over standard Series III |
| **Specialty Connectors** | |
| DEUTSCH CBC Bussed Connectors | Internal contact bussing for grounding or power distribution |
| DEUTSCH Grounding Connectors | |
| **38999 Series 1.5 Connectors** | |
| DEUTSCH HDJ/JN1003 Series Connectors | 38999 Series I bayonet coupling interface lengths and Series II diameters |
| **Hermetic Connectors** | |
| Overview/Capabilities | |

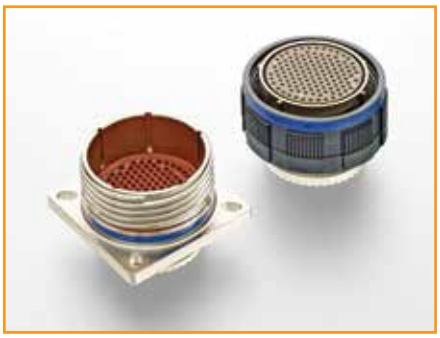

## 38999 Overview

MIL-DTL-38999 connectors are some of the most popular and widely used subminiature circular connectors for military and aerospace applications. With three coupling methods, nine shell sizes, and a wide variety of contact arrangements, the connectors help give you the range of choices you need. What's more, the original aluminum connectors have evolved to include stainless steel and composite shells—supported by a range of finishes.

### 38999-Style Connectors

Because of the widespread popularity of 38999 Series III connectors, the basic design has been adapted to a great many additional configurations. These 38999-style connectors include versions for power, fiber optics, filtering, high-speed networking, commercial interfaces, pc board interfaces, and higher contact densities. As a result, 38999-style connectors offer excellent versatility and flexibility.

### Rugged Reliability

When it comes to taming harsh environments, TE Connectivity (TE) offers 38999 connectors to handle a wide range of applications. We offer a broad array of configurations, materials and finishes to help meet the performance requirements of ground, aerospace, and marine applications. These highly durable subminiature circular connectors are time tested for reliability in some of the toughest environments.

TE helps meet the need for reliable performance with rugged MIL-DTL-389999 connectors having 500 mating cycles, operating temperatures to 200°C, corrosion-resistant and corrosion-proof connector versions, scoop-proof designs, and a variety of options for excellent electromagnetic interference (EMI) control, such as filtering and fiber optics.

### Designs that Save Space and Weight

The importance of reducing size and weight of components, including MIL-DTL-38999 subminiature connectors, should never be underestimated. Lighter, smaller connectors can make a big difference in terms of contributing to greater performance: longer flight times, greater payload capability, and increased efficiency. Beyond the standard lightweight aluminum connectors, we offer composite connectors to help support greater weight savings.

### Solve Tough Application Issues with TE

We work closely with customers to help meet their most demanding requirements for some of the world's toughest applications. Whether for ground defense, commercial and military aerospace, or marine applications, TE designs and manufactures MIL-DTL-38999 subminiature circular connectors to be ruggedly reliable, fast and easy to install, smaller and lighter, and with more options, materials and configurations to help maximize performance, reliability and efficiency.

## MIL-DTL-38999 Connector Series Overview

| | Series I | Series III | Series IV |
|---|---|---|---|
| **Coupling Mechanism** | Bayonet, 1/3 turn | Threaded, 360° turn | Breech lock, 1/4 turn |
| **Shell Materials** | Aluminum<br>Stainless steel | Aluminum<br>Stainless steel<br>Composite | Aluminum<br>Stainless steel |
| **Finishes** | Olive drab cadmium<br>Passivated<br>Electroless nickel<br>Electrodeposited nickel<br>Nickel PTFE<br>Black zinc nickel | Olive drab cadmium<br>Passivated<br>Electroless nickel<br>Electrodeposited nickel<br>Nickel PTFE<br>Black zinc nickel | Olive drab cadmium<br>Passivated<br>Electroless nickel |
| **Shell Sizes** | 9, 11, 13, 15, 17, 19, 21, 23, 25 | 9, 11, 13, 15, 17, 19, 21, 23, 25 | 11, 13, 15, 17, 19, 21, 23, 25 |
| **No. of Signal Contacts, Max.** | 128 | 187 | 128 |
| **Contact Sizes, Std.** | 22, 20, 16, 12, 8 | 23, 22, 20, 16, 12, 10, 8 | 22, 20, 16, 12, 8 |
| **Contact Type** | SAE AS39029 | | |
| **Contact Styles** | Crimp<br>PCB tail<br>Solder cup**<br>Eyelet** | | |
| **Features** | Scoop proof<br>Environmentally sealed<br>Hermetic versions<br>Filter versions<br>Spring fingers for EMI control | | |
| **Operating Temperatures** | -65°C to +200°C<br>-65°C to +175°C<br>-65°C to +150°C | | |
| **Durability (Mating Cycles)** | 500<br>ACT composite Series III: 1500* | | |

*Achievable only with high durability contacts or by replacing them each 500 cycles
** Hermetic versions only

## Shell Materials and Finishes

| Class | Plating/Finish | Finish Spec | Temperature (Max.) | Salt Spray (Hours) | Series | Shell-to-Shell Conductivity (mV Drop) | RoHS Compliant |
|---|---|---|---|---|---|---|---|
| **Aluminum Shells** | | | | | | | |
| B | Olive Drab Cadmium | QQ-P-416 | +175°C | 500 | I | 2.5 | No |
| F | Electroless Nickel | ASTM B733 | +200°C | 48 | I, III, IV | 1.0 | Yes |
| G | Electroless Nickel, Space Grade | ASTM B733 | +200°C | 48 | I, III, IV | 1.0 | Yes |
| T | Nickel PTFE | QQ-N-290 | +175°C | 500 | I, III, IV | 2.5 | Yes |
| W | Olive Drab Cadmium | QQ-P-416 | +175°C | 500 | III, IV | 2.5 | No |
| Z | Black Zinc Nickel | ASTM B841 | +175°C | 500 | I, III, IV | 2.5 | Yes |
| **Stainless Steel Shells** | | | | | | | |
| K | Passivated | — | +260°C | 500 | III | 10 | Yes |
| L | Electrodeposited Nickel | QQ-N-290 | +200°C | 500 | III | 1.0 | Yes |
| S | Electrodeposited Nickel | QQ-N-290 | +200°C | 500 | III | 1.0 | Yes |
| **Composite Shells** | | | | | | | |
| J | Olive Drab Cadmium | ASTM B733 | +175°C | 2000 | III | 3.0 | No |
| M | Electroless Nickel | QQ-N-290 | +200°C | 2000 | III | 3.0 | Yes |
| **Hermetic Connectors (Stainless Steel Shell)** | | | | | | | |
| Y | Passivated | — | +200°C | 500 | III, IV | 10.0 | Yes |
| N | Electrodeposited Nickel | QQ-N-290 | +200°C | 500 | I, III, IV | 1.0 | Yes |
| H | Electroless Nickel, Space Grade | QQ-N-290 | +200°C | 500 | III, IV | 10.0 | Yes |

## Service Rating

| Service Rating | Suggested Operating Voltage | | Test Voltage at Altitude ($VAC_{rms}$) | | | |
|---|---|---|---|---|---|---|
| | $VAC_{rms}$ | VDC | Sea Level | 50,000 Ft | 70,000 Ft. | 100,000 Ft |
| M | 400 | 550 | 1300 | 550 | 350 | 200 |
| N | 300 | 450 | 1000 | 400 | 260 | 200 |
| I | 600 | 850 | 1800 | 600 | 400 | 200 |
| II | 750 | 1050 | 2300 | 800 | 500 | 200 |

## Shell Materials

TE 38999 connectors are available with aluminum, stainless steel, and composite shells. In addition, we offer 38999-style connectors in marine bronze.

| | |
|---|---|
| **Aluminum** | **Aluminum offers a favorable balance of performance, weight, and cost**<br>Most widely used material<br>Light weight<br>Excellent corrosion resistance<br>Available in all finishes<br>Rugged |
| **Stainless Steel** | **Stainless steel is used for hermetic connectors or for connectors used in high-temperature environments, including engines and firewalls**<br>Passivated or nickel finish |
| **Composite** | **Composite shells offer the lightest weight and highest corrosion resistance**<br>Weight savings of up to 40% over aluminum and 70% over stainless steel<br>Corrosion proof: passes 2000-hour salt spray test<br>1500-mating-cycle durability |
| **Marine Bronze** | **With excellent corrosion resistance, aluminum nickel bronze is popular for marine applications**<br>Unplated marine bronze helps eliminate the danger of wear to plating that could expose the underlying material to corrosion.<br>See the section on DEUTSCH DTS-B series connectors. |

## Space-Grade Connectors

Outgassing—the release of gases trapped in a solid—of polymer materials such as connector inserts, seals, adhesives, or potting materials, is an issue since the gases can degrade performance of charge-coupled-device (CCD) sensors in satellites, thermal radiators, or solar cells. Outgassing is a challenge to creating and maintaining clean high-vacuum environments. The closed environment of spacecraft can make outgassing a greater concern. Our space-grade connectors use low-outgassing materials to help meet requirements for a Total Mass Loss of 1.00% or less and a Collected Volatile Condensable Material (CVCM) of 0.10% or less.

Materials can be processed to help meet NASA requirements for low outgassing by oven backout in a thermal vacuum environment.

Aluminum, with an electroless nickel finish, is usually the preferred shell material. Its low magnetic permeability helps prevent it from becoming magnetized.

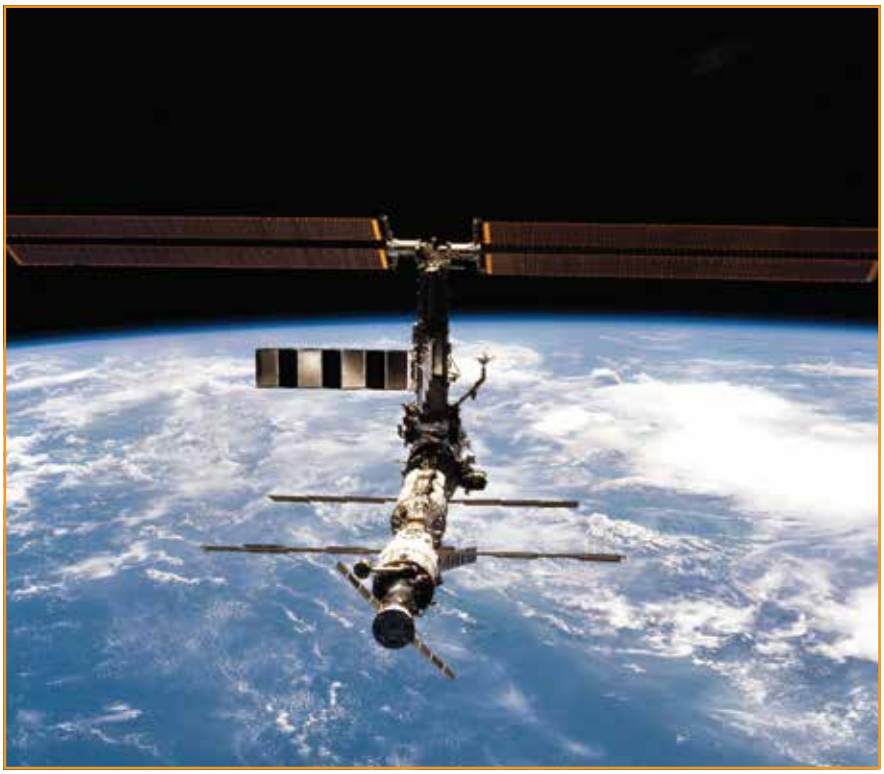

## Connector Styles

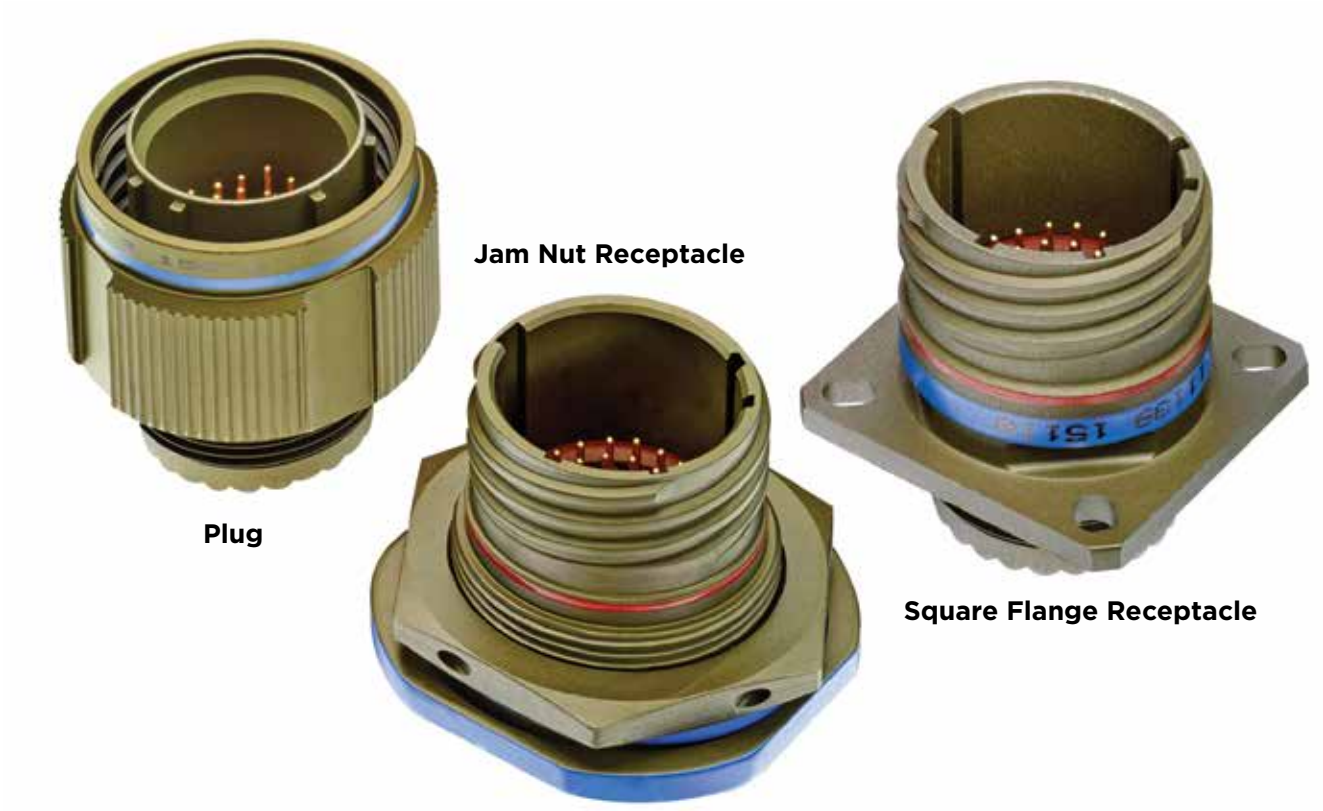


### Plug

Plugs are free-hanging cable-mount halves of a connection. They contain the coupling ring used to secure the plug to the receptacle.

### Jam Nut Receptacle

Jam nuts are the preferred style for creating an environmentally sealed mounting. Single-hole mounting and an integral o-ring allows a sealed mounting with a single hex nut threaded onto the front of the connector to secure it in place. Jam nut receptacles are rear-mount connectors.

### Square Flange Receptacle

These standard receptacles have a relatively large four-hole flange for front or rear mounting to a bulkhead or panel.

## Typical Constructions

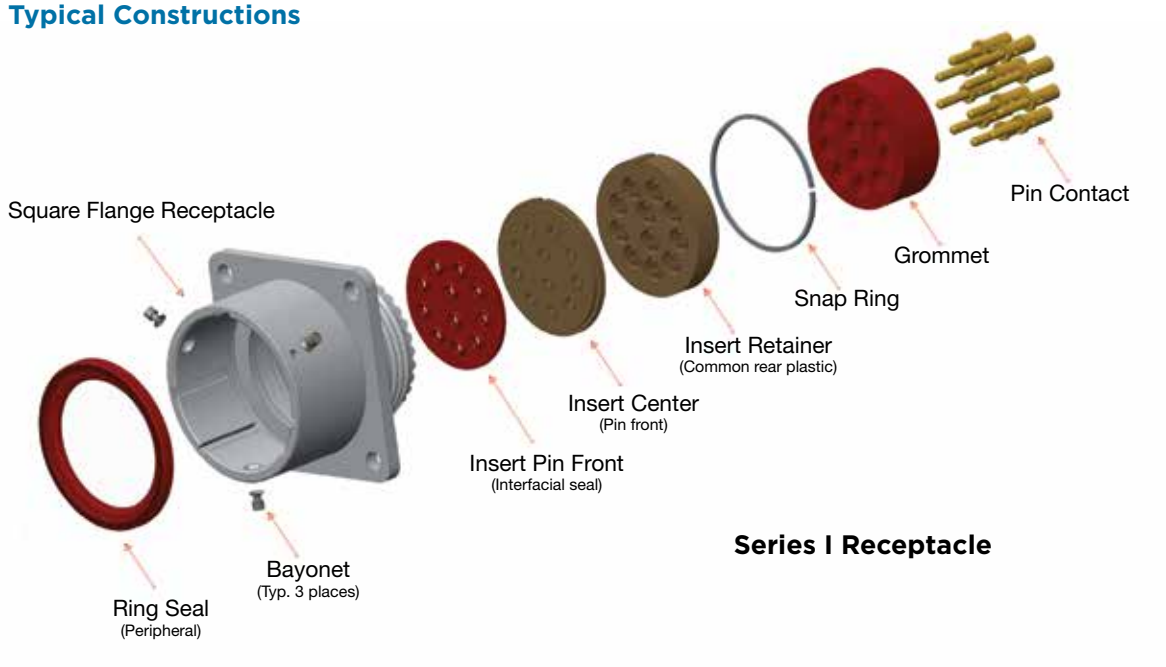


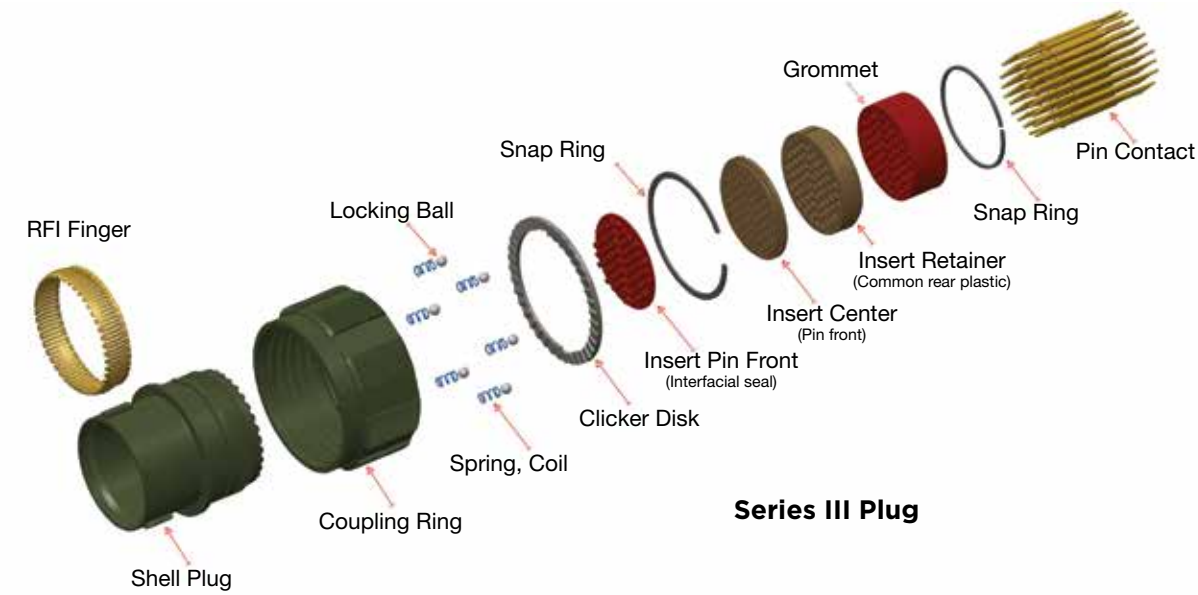

## Insert Arrangements

The drawings in this section use numeric shell sizes. MIL-DTL-38999 uses letter in place of shell size in the part number system. Thus, 9-35 and A35 describe the same insert arrangement.

| **Shell Size** | 9 | 11 | 13 | 15 | 17 | 19 | 21 | 23 | 25 |
|---|---|---|---|---|---|---|---|---|---|
| **Military Designation** | A | B | C | D | E | F | G | H | J |

### Shell Size 9

| | | | | |
|---|---|---|---|---|
| Insert | **09-06** | **09-07** | **09-23** | **09-35** |
| Configuration | 7 Size 22M Contacts | 7 Size 22D Contacts | 9 Size 23 Contacts | 6 Size 22D Contacts |
| Series | I, III | I, III | III | I, III, EN |
| Service Class | M | M | N | M |
| QPL | Yes | — | — | Yes |
| Class K QPL/S | — | — | — | Yes |
| Hermetic | Yes | — | — | Yes |

| | |
|---|---|
| Insert | **09-98** |
| Configuration | 3 Size 20 Contacts |
| Series | I, III, EN |
| Service Class | I |
| QPL | Yes |
| Class K QPL/S | Yes |
| Hermetic | Yes |

### Shell Size 11

| | | | | |
|---|---|---|---|---|
| Insert | **11-01** | **11-02** | **11-04** | **11-05** |
| Configuration | 1 Size 8 Contact | 2 Size 16 Contacts | 4 Size 20 Contacts | 5 Size 20 Contacts |
| Series | III, EN | I, III, IV | I, III, IV, EN | I, III, IV, EN |
| Service Class | N | I | I | I |
| QPL | — | Yes (Series I, III) | Yes | Yes |
| Class K QPL/S | — | — | — | — |
| Hermetic | — | Yes | Yes | Yes |

| | | | | |
|---|---|---|---|---|
| Insert | **11-12** | **11-13** | **11-23** | **11-35** |
| Configuration | 1 Size 12 Contact | 13 Size 22M Contacts | 19 Size 23 Contacts | 13 Size 22D Contacts |
| Series | III, EN | I, III, IV | III | I, III, IV, EN |
| Service Class | II | M | N | M |
| QPL | — | Yes | — | Yes |
| Class K QPL/S | — | — | — | Yes |
| Hermetic | — | Yes | — | Yes |

| | | |
|---|---|---|
| Insert | **11-98** | **11-99** |
| Configuration | 6 Size 20 Contacts | 7 Size 20 Contacts |
| Series | I, III, IV, EN | I, III, IV, EN |
| Service Class | I | I |
| QPL | Yes | Yes |
| Class K QPL/S | Yes | Yes |
| Hermetic | Yes | Yes |

## Shell Size 13

| | | | | |
|---|---|---|---|---|
| Insert | **13-04** | **13-08** | **13-22*** | **13-23** |
| Configuration | 4 Size 16 Contacts | 8 Size 20 Contacts | 22 Size 22M Contacts | 32 Size 23 Contacts |
| Series | I, III, IV, EN | I, III, IV, EN | I, III, IV | I, III, IV |
| Service Class | I | I | M | N |
| QPL | Yes | Yes | Yes | — |
| Class K QPL/S | — | Yes | — | — |
| Hermetic | Yes | Yes | Yes | — |

| | | |
|---|---|---|
| Insert | **13-35** | **13-98** |
| Configuration | 22 Size 22D Contacts | 10 Size 20 Contacts |
| Series | I, III, IV, EN | I, III, IV, EN |
| Service Class | M | I |
| QPL | Yes | Yes |
| Class K QPL/S | Yes | Yes |
| Hermetic | Yes | Yes |

*Inactive for new designs

## Shell Size 15

| | 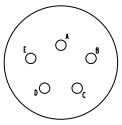 | 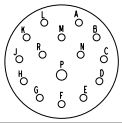 | 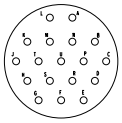 | 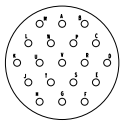 |
|---|---|---|---|---|
| Insert | **15-05** | **15-15** | **15-18** | **15-19** |
| Configuration | 5 Size 16 Contacts | 14 Size 20 Contacts | 18 Size 20 Contacts | 19 Size 20 Contacts |
| Series | I, III, IV, EN | I, III, IV, EN | I, III, IV, EN | I, III, IV, EN |
| Service Class | II | I | I | I |
| QPL | Yes | Yes | Yes | Yes |
| Class K QPL/S | Yes | — | Yes | Yes |
| Hermetic | Yes | Yes | Yes | Yes |

| | 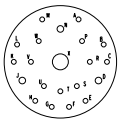 | 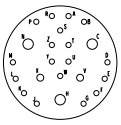 | 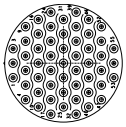 | 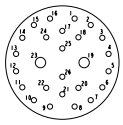 |
|---|---|---|---|---|
| Insert | **15-21** | **15A23** | **15-23** | **15-26** |
| Configuration | 1 Size 12 Coax Contact<br>3 Size 20 Contacts<br>17 Size 22D Contacts | 4 Size 16 Coax Contacts<br>3 Size 20 Contacts<br>19 Size 22D Contacts | 55 Size 23 Contacts | 2 Size 16 Contacts<br>24 Size 22D Contacts |
| Series | I, III, IV | III | III | I, III, IV |
| Service Class | I | N | N | M |
| QPL | | — | — | — |
| Class K QPL/S | — | — | — | — |
| Hermetic | — | — | — | — |

| | 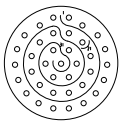 | 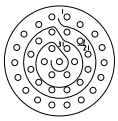 | 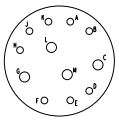 |
|---|---|---|---|
| Insert | **15-35** | **15-37** | **15-97** |
| Configuration | 37 Size 22D Contacts | 37 Size 22M Contacts | 4 Size 12 Contacts<br>8 Size 20 Contacts |
| Series | I, III, IV, EN | I, III, IV | I, III, IV, EN |
| Service Class | M | M | I |
| QPL | Yes | Yes | Yes |
| Class K QPL/S | Yes | — | Yes |
| Hermetic | Yes | Yes | Yes |

## Shell Size 17

| | | | | |
|---|---|---|---|---|
| | 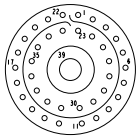 | 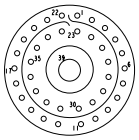 | 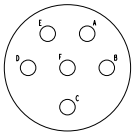 | 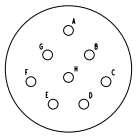 |
| Insert | **17-02*** | **17-03** | **17-06** | **17-08** |
| Configuration | 1 Size 8 Twinax Contact<br>38 Size 22D Contacts | 1 Size 8 Twinax<br>38 Size 22D Contacts | 6 Size 12 Contacts | 8 Size 16 Contacts |
| Series | I, III, IV, EN | I, III, IV | I, III, IV, EN | I, III, IV, EN |
| Service Class | M | M | I | II |
| QPL | | — | Yes | Yes |
| Class K QPL/S | — | — | Yes | Yes |
| Hermetic | — | — | Yes | Yes |

| | | | | |
|---|---|---|---|---|
| | 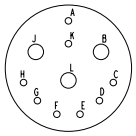 | 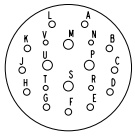 | 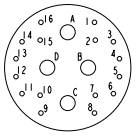 | 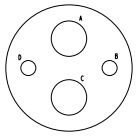 |
| Insert | **17-11** | **17-19** | **17-20** | **17-22** |
| Configuration | 2 Size 12 Twinax<br>1 Size 12 Coax<br>8 Size 20 Contacts | 4 Size 16 Contacts<br>11 Size 20 Contacts<br>4 Size 22D Contacts | 4 Size 12 Contacts<br>16 Size 22D Contacts | 2 Size 8 Twinax<br>2 Size 10 Contacts |
| Series | I, III, IV | I, III, IV | I, III, IV, EN | I, III, IV, EN |
| Service Class | N | N | N | N |
| QPL | — | — | — | — |
| Class K QPL/S | — | — | — | — |
| Hermetic | — | — | — | — |

| | | | | |
|---|---|---|---|---|
| | 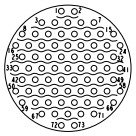 | 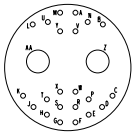 | 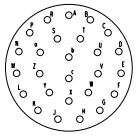 | 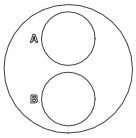 |
| Insert | **17-23** | **17-24** | **17-26** | **17-28** |
| Configuration | 73 Size 23 Contacts | 2 Size 8 Power<br>2 Size 12 Contacts | 26 Size 20 Contacts | 2 Size 8 Twinax |
| Series | III | I, III, IV | I, III, IV, EN | I, III, IV, EN |
| Service Class | N | N | I | Twinax |
| QPL | — | — | Yes | Yes |
| Class K QPL/S | — | — | Yes | — |
| Hermetic | — | — | Yes | — |

| | | | |
|---|---|---|---|
| | 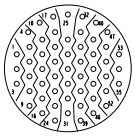 | 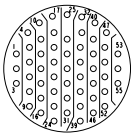 | 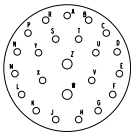 |
| Insert | **17-35** | **17-55** | **17-99** |
| Configuration | 55 Size 22D Contacts | 55 Size 22M Contacts | 2 Size 16 Contacts<br>21 Size 20 Contacts |
| Series | I, III, IV, EN | I, III, IV | I, III, IV, EN |
| Service Class | M | M | I |
| QPL | Yes | Yes | Yes |
| Class K QPL/S | Yes | — | No |
| Hermetic | Yes | Yes | Yes |

*Inactive for new designs

## Shell Size 19

| | 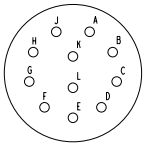 | 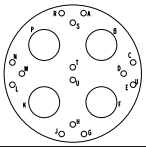 | 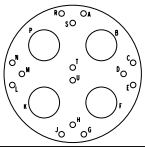 | 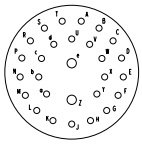 |
|---|---|---|---|---|
| Insert | **19-11** | **19-18*** | **19-19** | **19-28** |
| Configuration | 11 Size 16 Contacts | 4 Size 8 Twinax<br>14 Size 20 Contacts | 4 Size 8 Twinax<br>14 Size 20 Contacts | 2 Size 16 Contacts<br>26 Size 20 Contacts |
| Series | I, III, IV, EN | I, III, IV | I, III, IV | I, III, IV |
| Service Class | II | M | M | I |
| QPL | Yes | — | — | — |
| Class K QPL/S | Yes | — | — | — |
| Hermetic | Yes | — | — | Yes |

| | 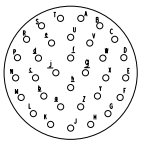 | 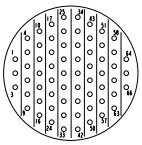 | 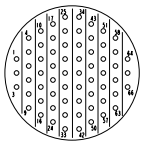 |
|---|---|---|---|
| Insert | **19-32** | **19-35** | **19-66*** |
| Configuration | 32 Size 20 Contacts | 66 Size 22D Contacts | 66 Size 22M Contacts |
| Series | I, III, IV, EN | I, III, IV, EN | I, III, IV |
| Service Class | I | M | M |
| QPL | Yes | Yes | Yes |
| Class K QPL/S | Yes | Yes | — |
| Hermetic | Yes | Yes | Yes |

*Inactive for new designs

## Shell Size 21

| | | | | |
|---|---|---|---|---|
| | 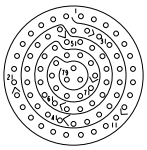 | 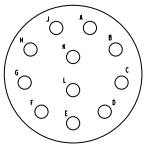 | 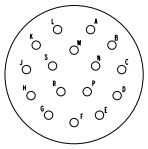 | 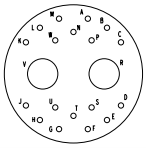 |
| Insert | **21-01*** | **21-11** | **21-16** | **21-20** |
| Configuration | 79 Size 22M Contacts | 11 Size 12 Contacts | 16 Size 16 Contacts | 2 Size 8 Twinax<br>18 Size 20 Contacts |
| Series | I, III, IV | I, III, IV, EN | I, III, IV, EN | I, III, IV, EN |
| Service Class | I | I | II | M |
| QPL | Yes | Yes | Yes | — |
| Class K QPL/S | — | — | Yes | — |
| Hermetic | Yes | Yes | — | — |
| | | | Yes | — |

| | | | | |
|---|---|---|---|---|
| | 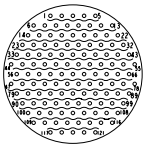 | 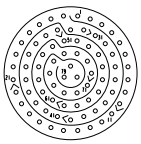 | 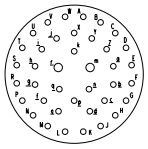 | 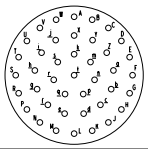 |
| Insert | **21-23** | **21-35** | **21-39** | **21-41** |
| Configuration | 121 Size 23 Contacts | 79 Size 22D Contacts | 2 Size 16 Contacts<br>37 Size 20 Contacts | 41 Size 20 Contacts |
| Series | I, III | I, III, IV, EN | I, III, IV, EN | I, III, IV, EN |
| Service Class | N | M | I | I |
| QPL | — | Yes | Yes | Yes |
| Class K QPL/S | — | Yes | Yes | Yes |
| Hermetic | — | Yes | Yes | Yes |

| | | | |
|---|---|---|---|
| | 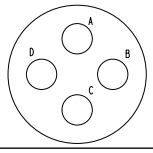 | 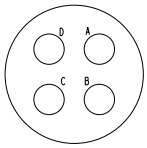 | 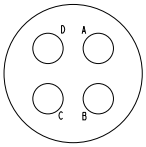 |
| Insert | **21-48** | **21-75*** | **21-76** |
| Configuration | 4 Size 8 Power | 4 Size 8 Twinax | 4 Size 8 Twinax |
| Series | I, III, IV | I, III, IV, EN | I, III, IV |
| Service Class | — | Twinax | Twinax |
| QPL | — | Yes | — |
| Class K QPL/S | — | — | — |
| Hermetic | | — | — |

*Inactive for new designs

## Shell Size 23

| | 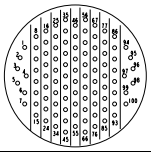 | 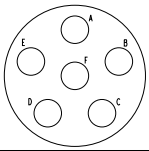 | 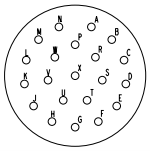 | 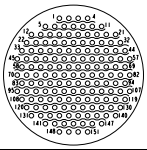 |
|---|---|---|---|---|
| Insert | **23-01*** | **23-06** | **23-21** | **23-23** |
| Configuration | 100 Size 22M Contacts | 6 Size 8 Twinax | 21 Size 16 Contacts | 151 Size 23 Contacts |
| Series | I, III, IV | I, III, IV, EN | I, III, IV, EN | III |
| Service Class | M | M | II | N |
| QPL | Yes | — | Yes | — |
| Class K QPL/S | — | — | — | — |
| Hermetic | Yes | Yes | Yes | — |

| | 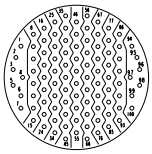 | 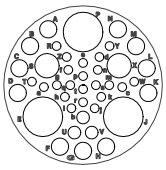 | 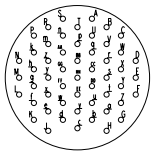 | 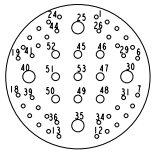 |
|---|---|---|---|---|
| Insert | **23-35** | **23-41** | **23-53** | **23-54** |
| Configuration | 100 Size 22D Contacts | 3 Size 8 Contacts<br>3 Size 12 Contacts<br>11 Size 16 Contacts<br>3 Size 20 Contacts<br>22 Size 22D Contacts | 53 Size 20 Contacts | 4 Size 12 Contacts<br>9 Size 16 Contacts<br>40 Size 22D Contacts |
| Series | I, III, IV, EN | III, EN | I, III, IV, EN | I, III, IV, EN |
| Service Class | M | N | I | M |
| QPL | Yes | — | Yes | — |
| Class K QPL/S | — | — | Yes | — |
| Hermetic | Yes | — | Yes | — |

| | 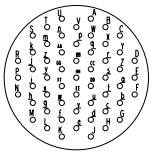 | 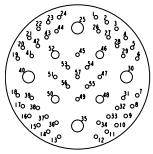 |
|---|---|---|
| Insert | **23-55** | **23-63** |
| Configuration | 55 Size 20 Contacts | 4 Size 12 Contacts<br>4 Size 16 Contacts<br>49 Size 22D Contacts |
| Series | I, III, IV, EN | I, III, IV |
| Service Class | I | M |
| QPL | Yes | — |
| Class K QPL/S | — | — |
| Hermetic | Yes | — |

*Inactive for new designs

## Shell Size 25

| | | | | |
|---|---|---|---|---|
| | 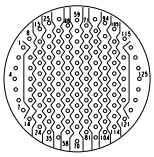 | 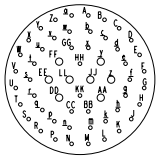 | 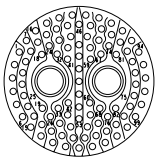 | 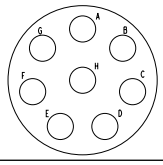 |
| Insert Configuration | **25-01*** 128 Size 22D Contacts | **25-04** 8 Size 16 Contacts 48 Size 20 Contacts | **25-07*** 2 Size 8 Twinax 97 Size 22D Contacts | **25-08*** 8 Size 8 Twinax |
| Series | I, III, IV | I, III, IV, EN | I, III, IV, EN | I, III, IV, EN |
| Service Class | M | I | M | Twinax |
| QPL | Yes | Yes | — | — |
| Class K QPL/S | — | Yes | — | — |
| Hermetic | Yes | Yes | — | — |

| | | | | |
|---|---|---|---|---|
| | 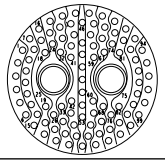 | 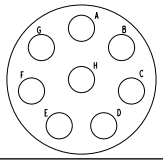 | 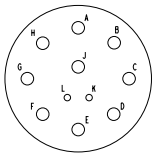 | 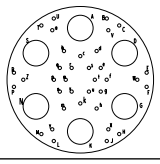 |
| Insert Configuration | **25-09** 2 Size 8 Twinax 97 Size 22D Contacts | **25-10** 8 Size 8 Twinax | **25-11** 9 Size 10 Contacts 2 Size 20 Contacts | **25-17** 6 Size 8 Twinax 36 Size 22D Contacts |
| Series | I, III, IV | I, III, IV | I, III, IV, EN | I, III, IV, EN |
| Service Class | M | Twinax | N | N |
| QPL | — | — | — | — |
| Class K QPL/S | — | — | — | — |
| Hermetic | — | — | — | — |

| | | | | |
|---|---|---|---|---|
| | 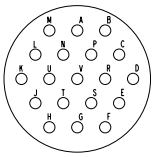 | 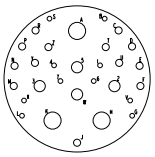 | 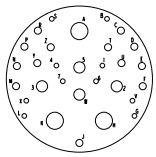 | 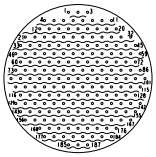 |
| Insert Configuration | **25-19** 19 Size 12 Contacts | **25-20** 3 Size 8 Twinax 4 Size 12 Coax 13 Size 16 Contacts 10 Size 20 Contacts | **25-21** 3 Size 8 Twinax 4 Size 12 Coax 13 Size 16 Contacts 10 Size 20 Contacts | **25-23** 187 Size 22D Contacts |
| Series | I, III, IV, EN | I, III, IV, EN | I, III, IV | I, III, IV |
| Service Class | I | N | N | N |
| QPL | Yes | Yes | Yes | — |
| Class K QPL/S | — | — | — | — |
| Hermetic | Yes | — | — | — |

*Inactive for new designs

## Shell Size 25

| | 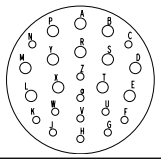 | 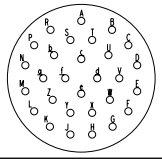 | 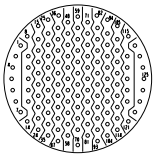 | 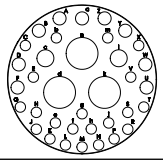 |
|---|---|---|---|---|
| Insert Configuration | **25-24**<br>12 Size 12 Contacts<br>12 Size 16 Contacts | **25-29**<br>29 Size 16 Contacts | **25-35**<br>128 Size 22D Contacts | **25-36**<br>3 Size 8 Contacts<br>1 Size 12 Coax<br>1 Size 12 Contact<br>10 Size 16 Contacts<br>24 Size 20 Contacts |
| Series | I, III, IV, EN | I, III, IV, EN | I, III, IV, EN | III, EN |
| Service Class | I | I | M | N |
| QPL | Yes | Yes | Yes | — |
| Class K QPL/S | — | — | Yes | — |
| Hermetic | Yes | Yes | Yes | — |

| | 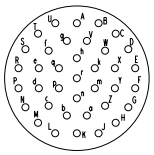 | 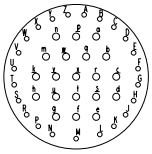 | 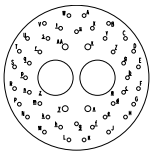 | 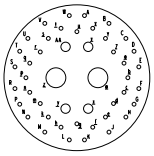 |
|---|---|---|---|---|
| Insert Configuration | **25-37**<br>37 Size 16 Contacts | **25-43**<br>20 Size 16 Contacts<br>23 Size 20 Contacts | **25-46***<br>2 Size 8 Coax<br>4 Size 12 Contacts<br>40 Size 20 Contacts | **25-47**<br>2 Size 8 Coax<br>4 Size 12 Contacts<br>40 Size 20 Contacts |
| Series | I, III, IV, EN | I, III, IV, EN | I, III, IV, EN | I, III, IV |
| Service Class | II | I | I | I |
| QPL | Yes | Yes | Yes | — |
| Class K QPL/S | — | — | — | — |
| Hermetic | — | Yes | — | — |

| | 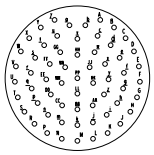 | 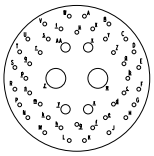 | 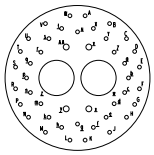 |
|---|---|---|---|
| Insert Configuration | **25-61**<br>61 Size 20 Contacts | **25-90***<br>2 Size 8 Twinax<br>4 Size 16 Contacts<br>40 Size 20 Contacts | **25-91**<br>2 Size 8 Twinax<br>4 Size 16 Contacts<br>40 Size 20 Contacts |
| Series | I, III, IV, EN | I, III, IV | I, III, IV |
| Service Class | I | I | I |
| QPL | Yes | — | — |
| Class K QPL/S | Yes | — | — |
| Hermetic | Yes | — | — |

*Inactive for new designs

**RUGGED**

- Self-locking bayonet coupling system
- 100% scoop proof
- 500-mating-cycle durability
- Excellent shock and vibration resistance
- Environmentally sealed and hermetic versions available

**VERSATILE**

- Available in 9 shell sizes
- Intermateable and interchangeable with all other MIL-DTL-38999 Series I connectors
- Available in a variety of shell materials and finishes
- Wide range of backshells and accessories

**EMI PROTECTED**

- Grounding fingers for excellent EMI protection
- Connector is grounded when the shells meet, even before the contacts are engaged
- Metal-to-metal bottoming to help maximize EMI grounding protection
- EMI shielding effective up to 10 GHz

# MIL-DTL-38999 Series I Connectors

## DEUTSCH DJT Series Connectors

The DEUTSCH DJT Series connectors from TE Connectivity (TE) are high-performance MIL-DTL-38999 Series I subminiature circular connectors offering a scoop-proof design for easy, reliable mating.

Available in 9 shell sizes and environmentally sealed and hermetic versions, DEUTSCH DJT Series connectors feature a self-locking bayonet coupling system. They are completely intermateable and interchangeable with MIL-DTL-38999 Series I connectors, and are available in a variety of shell materials and finishes.

Designed for rugged reliability, DEUTSCH DJT Series connectors are highly durable, capable of 500 mating cycles. They provide excellent vibration, corrosion and shock resistance, and offer excellent EMI protection and shielding effectiveness from 100 MHz to 10 GHz.

# MIL-DTL-38999 Series I Connectors

## DEUTSCH DJT Series Connectors

## Specifications

### MATERIALS

- **Shell Material and Plating:**
  Aluminum, olive drab cadmium
  Aluminum, electroless nickel
  Carbon steel, electrodeposited nickel (hermetic only)
  Stainless steel, passivated (hermetic only but can be available commercially for standard environment configurations)
- **Insert:** Thermoplastic and fluorinated silicone elastomer
- **EMI Spring Fingers:** Nickel or cadmium-plated beryllium copper
- **O-Ring:** Fluorinated silicone elastomer

### ENVIRONMENTAL

- **Temperature Range:**
  -65°C to +150°C Electrodeposited tin-plated carbon steel (Class D)
  -65°C to +175°C – Cadmium finish (Class B)
  -65°C to +200°C – Nickel finish (Class F) and stainless steel (Class E)
- **Fluid Resistance:** Fluid immersion per EIA 364.10, including resistance to
  MIL-PRF-5606: Hydraulic fluid
  MIL-DTL-83133: JP-8 aviation fuel
  MIL-PRF-7808: Lubricating oil
  MIL-PRF-23699: Lubricating oil
  MIL-A-8243: Deicing/defrosting fluid
  MIL-C-25769: Aircraft cleaning compound
  MIL-PRF-87937: Aircraft cleaning compound
  MIL-G-3056: Gasoline
- **Salt Spray:** 48 hours (Nickel finishes)
  500 hours (Cadmium, black zinc nickel, nickel PTFE, and passivated finishes)
- **Thermal Cycling:** -65° to 150/175/200°C (max. temperature is class dependent)

### MECHANICAL

- **Sine Vibration:** Up to 60 g for 36 hr.
- **Random Vibration:** Up to 41.7 g for 16 hr. at 175° C
  Up to 50 g for 16 hr. at ambient temperature
- **Shock:** 300 g, 3 ms in the 3 axes
- **Durability:** 500 mating cycles
- **Contact Retention:**
  Size 22D: 44 N (10 lb.)
  Size 20: 67 N (15 lb.)
  Size 16: 111 N (25 lb.)
  Size 12: 111 N (25 lb.)
  Size 10: 111 N (25 lb.)
  Size 8: 111 N (25 lb.)

### ELECTRICAL

- **Shell-to-Shell Conductivity:** 1.0 mV (nickel finish)
  2.5 mV (cadmium finish)
  10.0 mV (passivated finish)
- **Shielding Effectiveness:** >90 dB at 100 MHz, >65 dB through 10 GHz

# MIL-DTL-38999 Series I Connectors

## DEUTSCH DJT Series Connectors

### Voltage Rating

| Service Rating | Suggested Operating Voltage | | Test Voltage at Altitude ($VAC_{rms}$) | | | |
|---|---|---|---|---|---|---|
| | $VAC_{rms}$ | VDC | Sea Level | 50,000 Ft. | 70,000 Ft. | 100,000 Ft. |
| M | 400 | 550 | 1300 | 550 | 350 | 200 |
| N | 300 | 450 | 1000 | 400 | 260 | 200 |
| I | 600 | 850 | 1800 | 600 | 400 | 200 |
| II | 750 | 1050 | 2300 | 800 | 500 | 200 |

### Hermetic Connectors

- **Hermetic Seal:** Sintered glass
- **Leakage:** ≤16 $cm^3$/hr. (0.97 $in^3$/hr.) on mated pairs connected under 2.1 bar (4.38 psi)
- **Thermal Shock:** 10 cycles, 4°C max. to 90°C min.

### Current Rating

| Contact Size | Test Current (A) | Voltage Drop (mV) |
|---|---|---|
| 22D | 5 | 73 |
| 20 | 7.5 | 55 |
| 16 | 13 | 50 |
| 12 | 23 | 42 |
| 10 | 33 | 34 |
| 8* | 46 | 26 |

*When commercial power contact replaces twin-ax contact

### Thread Sizes

| Shell Size | Accessory Thread (Class 2A) | Jam Nut Thread (Class 2A) |
|---|---|---|
| 9 | .4375-28 UNEF | .6875-24 UNEF |
| 11 | .5625-24 UNEF | .8125-20 UNEF |
| 13 | .6875-24 UNEF | 1.0000-20 UNEF |
| 15 | .8125-20 UNEF | 1.1250-18 UNEF |
| 17 | .9375-20 UNEF | 1.2500-18 UNEF |
| 19 | 1.0625-18 UNEF | 1.3750-18 UNEF |
| 21 | 1.1875-18 UNEF | 1.5000-18 UNEF |
| 23 | 1.3125-18 UNEF | 1.6250-18 UNEF |
| 25 | 1.4375-18 UNEF | 1.7500-18 UNS |

# MIL-DTL-38999 Series I Connectors

## Military Part Numbering System

**MS27466 T 25 F 35 S D xxxx**

**MIL SPEC NUMBER/SHELL STYLE**

**MS27466** Front, Wall Mount Receptacle (DJT10)
**MS27467** Straight Plug with EMI Fingers (DJT16)
**MS27468** Jam Nut Receptacle (DJT14)
**MS27470** Jam Nut Hermetic Receptacle (DJT14)
**MS27471** Solder Mount Hermetic Receptacle (DJT11)
**MS27496** Front, Box Mount Receptacle (DJT13)
**MS27505** Rear, Box Mount Receptacle (DJT12)
**MS27656** Rear, Wall Mount Receptacle (DJT19)

**CLASS**

**T** With Accessory Thread (MS27466, MS27467, M27468, M27656)
**E** Same As **T**, But Not Approved For New Designs (E-Nut Not Included)
**E** No Accessory Thread, Box Mount (M27496, M27505)
**G** Space-Grade Environment Resisting
**Y** Hermetically Sealed

**SHELL SIZE**

**9, 11, 13, 15, 17, 19, 21, 23, 25**

**MODIFICATIONS**

**L/C** Less Contacts

**POLARIZING POSITIONS**

**N** Normal (omit from part number)
**A, B, C, D** (B and C not available in shell size 9)

**CONTACTS**

**P** 500-Cycle Pin
**S** 500-Cycle Socket
**H** 1500-Cycle Pin
**J** 1500-Cycle Socket
**A** Less Pin (with intent to use nonstandard contacts)
**B** Less Socket (with intent to use nonstandard contacts)

**Hermetic Contacts**

**P** Pin, Solder Cup
**S** Socket, Solder Cup
**X** Pin, Eyelet
**Z** Socket, Eyelet
**C** Pin, PC Tail
**D** Socket, PC Tail

**INSERT ARRANGEMENT**

See Insert Arrangement Tables, pages 10-17 and 22-23

**FINISH**

**B** Olive Drab Cadmium
**F** Nickel
**G** Space Grade
**D** Carbon Steel, Electrodeposited Tin Plating
**E** Stainless Steel, Passivated

## DEUTSCH Part Numbering System

**DJT 1 0 F 25 - 35 S D xxxx**

**GENERAL IDENTIFIER**

**DJT** DEUTSCH MIL-DTL-38999 Series I

**COUPLING SYSTEM**

**1** Bayonet

**SHELL STYLE**

**0** Front, Wall Mount Receptacle (M27466)
**6** Straight Plug with EMI Fingers (M27467)
**4** Jam Nut Receptacle (M27468)
**4** Jam Nut Hermetic Receptacle (MS27470)
**1** Solder Mount Hermetic Receptacle (MS27471)
**3** Front, Box Mount Receptacle (M27496)
**2** Rear, Box Mount Receptacle (M27505)
**9** Rear, Wall Mount Receptacle (M27656)

**CLASS**

**E** Olive Drab Cadmium
**F** Nickel
**G** Space Grade
**H** Hermetic
**Z** Black Zinc Nickel

**MODIFICATIONS**

**6149** Less Contacts

**POLARIZING POSITIONS**

**N** Normal
**A, B, C, D** (B and C not available in shell size 9)

**CONTACTS**

**P** 500-Cycle Pin
**S** 500-Cycle Socket
**H** 1500-Cycle Pin
**J** 1500-Cycle Socket
**A** Less Pin (with intent to use nonstandard contacts)
**B** Less Socket (with intent to use nonstandard contacts)

**Hermetic Contacts**

**P** Pin, Solder Cup
**S** Socket, Solder Cup
**X** Pin, Eyelet
**Z** Socket, Eyelet
**C** Pin, PC Tail
**D** Socket, PC Tail

**INSERT ARRANGEMENT**

See Insert Arrangement Tables, pages 10-17 and 22-23

**SHELL SIZE**

**09, 11, 13, 15, 17, 19, 21, 23, 25**

# MIL-DTL-38999 Series I Connectors

## DEUTSCH DJT Series Connectors

| Insert | Contact Size/Quantity | | | | | | | | | | | | | |
|---|---|---|---|---|---|---|---|---|---|---|---|---|---|---|
| DJT and Military | 8 Twinax | 8 Coax | 8 Power | 12 Twinax | 12 Coax | 10 | 12 | 16 | 20 | 22D | QPL | QPL Hermetic | Uses 38999/62-8* Boots | Inactive: Superseded by |
| 09-07 | | | | | | | | | | 7 | | | | |
| 09-35 | | | | | | | | | | 6 | ✔ | ✔ | | |
| 09-98 | | | | | | | | | 3 | | ✔ | ✔ | | |
| 11-02 | | | | | | | | 2 | | | ✔ | ✔ | | |
| 11-04 | | | | | | | | | 4 | | | ✔ | | |
| 11-05 | | | | | | | | | 5 | | ✔ | | | |
| 11-35 | | | | | | | | | | 13 | ✔ | ✔ | | |
| 11-98 | | | | | | | | | 6 | | ✔ | ✔ | | |
| 11-99 | | | | | | | | | 7 | | ✔ | ✔ | | |
| 13-04 | | | | | | | | 4 | | | ✔ | ✔ | | |
| 13-08 | | | | | | | | | 8 | | ✔ | ✔ | | |
| 13-35 | | | | | | | | | | 22 | ✔ | ✔ | | |
| 13-98 | | | | | | | | | 10 | | ✔ | ✔ | | |
| 15-05 | | | | | | | | 5 | | | ✔ | ✔ | | |
| 15-15 | | | | | | | | 1 | 14 | | | ✔ | | |
| 15-18 | | | | | | | | | 18 | | | ✔ | | |
| 15-19 | | | | | | | | | 19 | | ✔ | ✔ | | |
| 15-26 | | | | | | | | 2 | | 24 | | | | |
| 15-35 | | | | | | | | | | 37 | ✔ | ✔ | | |
| 15-97 | | | | | | | | 4 | 8 | | ✔ | ✔ | | |
| 17-02 | 1 | | | | | | | | | 38 | | | | 17-03 |
| 17-03 | 1 | | | | | | | | | 38 | | | ✔ | |
| 17-06 | | | | | | | 6 | | | | ✔ | | | |
| 17-08 | | | | | | | | 8 | | | ✔ | | | |
| 17-11 | | | | 2 | 1 | | | | 8 | | | | | |
| 17-19 | | | | | | | | 4 | 11 | 4 | | | | |
| 17-20 | | | | | | | 4 | | | 16 | | | | |
| 17-22 | 2 | | | | | | 2 | | | | | | | |
| 17-24 | | | 2 | | | | | | | 22 | | | | |
| 17-26 | | | | | | | | | 26 | | ✔ | | | |
| 17-35 | | | | | | | | | | 55 | ✔ | | | |
| 17-99 | | | | | | | | 2 | 21 | | ✔ | | | |
| 19-11 | | | | | | | | 11 | | | ✔ | | | |
| 19-18 | 4 | | | | | | | | | 14 | | | | 19-19 |
| 19-19 | 4 | | | | | | | | | 14 | | | ✔ | |
| 19-28 | | | | | | | | 2 | 26 | | | | | |
| 19-32 | | | | | | | | | 32 | | ✔ | | | |

Blue shaded entries are not Mil Spec.

# MIL-DTL-38999 Series I Connectors

## DEUTSCH DJT Series Connectors

| Insert | Contact Size/Quantity | | | | | | | | | | | | | |
|---|---|---|---|---|---|---|---|---|---|---|---|---|---|---|
| DJT and Military | 8 Twinax | 8 Coax | 8 Power | 12 Twinax | 12 Coax | 10 | 12 | 16 | 20 | 22D | QPL | QPL Hermetic | Uses 38999/62-8* Boots | Inactive: Superseded by |
| 19-35 | | | | | | | | | | 66 | ✔ | | | |
| 21-11 | | | | | | | 11 | | | | ✔ | | | |
| 21-16 | | | | | | | | 16 | | | ✔ | | | |
| 21-20 | 2 | | | | | | | | 18 | | | | | |
| 21-35 | | | | | | | | | | 79 | ✔ | | | |
| 21-39 | | | | | | | | 2 | 37 | | ✔ | | | |
| 21-41 | | | | | | | | | 41 | | ✔ | | | |
| 21-48 | | | 4 | | | | | | | | | | | |
| 21-75 | 4 | | | | | | | | | | | | | 21-76 |
| 21-76 | 4 | | | | | | | | | | | | ✔ | |
| 23-06 | 6 | | | | | | | | | | | | | |
| 23-21 | | | | | | | | 21 | | | ✔ | | | |
| 23-35 | | | | | | | | | | 100 | ✔ | | | |
| 23-53 | | | | | | | | | 53 | | ✔ | | | |
| 23-54 | | | | | | | 4 | 9 | | 40 | | | | |
| 23-55 | | | | | | | | | 55 | | ✔ | | | |
| 23-63 | | | | | | | 4 | 4 | | 49 | | | | |
| 25-04 | | | | | | | | 8 | 48 | | ✔ | ✔ | | |
| 25-07 | 2 | | | | | | | | | 97 | | | | 25-09 |
| 25-08 | 8 | | | | | | | | | | | | | 25-10 |
| 25-09 | 2 | | | | | | | | | 97 | | | ✔ | |
| 25-10 | 8 | | | | | | | | | | | | ✔ | |
| 25-17 | 6 | | | | | | | | | 36 | | | | |
| 25-19 | | | | | | | 19 | | | | ✔ | ✔ | | |
| 25-20 | 3 | | | | 4 | | | 13 | 10 | | | | | 25-21 |
| 25-21 | 3 | | | | 4 | | | 13 | 10 | | | | ✔ | |
| 25-24 | | | | | | | 12 | 12 | | | ✔ | ✔ | | |
| 25-29 | | | | | | | | 29 | | | ✔ | ✔ | | |
| 25-35 | | | | | | | | | | 128 | ✔ | ✔ | | |
| 25-37 | | | | | | | | 37 | | | ✔ | ✔ | | |
| 25-43 | | | | | | | | 20 | 23 | | ✔ | ✔ | | |
| 25-46 | | 2 | | | | | | 4 | 40 | | | | | 25-47 |
| 25-47 | | 2 | | | | | | 4 | 40 | | | | ✔ | |
| 25-61 | | | | | | | | | 61 | | ✔ | ✔ | | |
| 25-90 | 2 | | | | | | | 4 | 40 | | | | | 25-91 |
| 25-91 | 2 | | | | | | | 4 | 40 | | | | ✔ | |

Blue shaded entries are not Mil Spec.

# MIL-DTL-38999 Series I Connectors

## DEUTSCH DJT Series Connectors

### Front Panel Mount Square Flange Receptacle

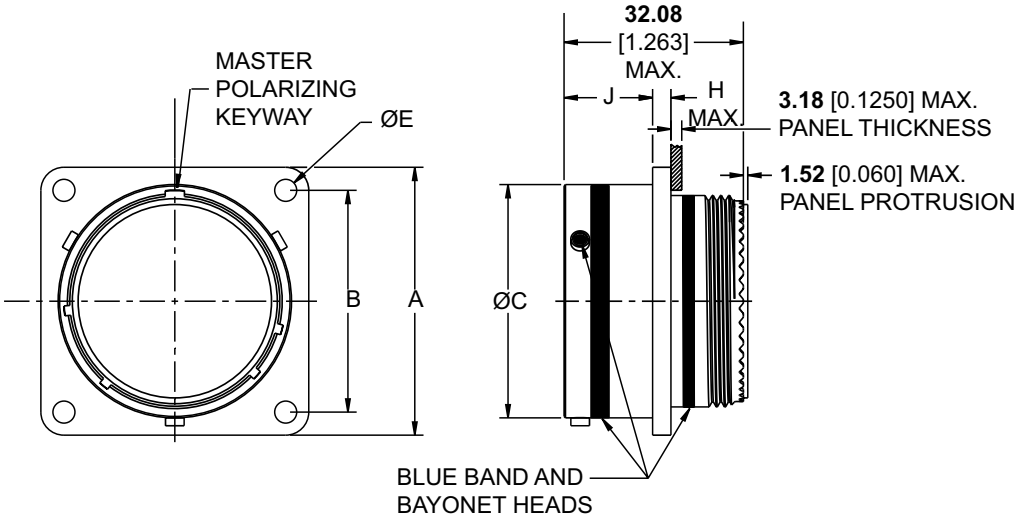


| Shell Size | A ±0.51 (0.020) | B ±0.13 (0.005) | C ±0.08 (0.003) | E +0.25 ± 0.25/-0.13 (+0.010/-0.005) | F | G ±0.13 (0.005) | H | J +0.00 / -0.13 (0.005) |
|---|---|---|---|---|---|---|---|---|
| 09 | **23.83** 0.938 | **18.26** 0.719 | **14.48** 0.570 | **3.25** 0.128 | **13.11** 0.516 | **3.25** 0.128 | **2.54** 0.100 | **16.05** 0.623 |
| 11 | **26.19** 1.031 | **20.62** 0.812 | **17.73** 0.698 | **3.25** 0.128 | **16.87** 0.664 | **3.25** 0.128 | **2.54** 0.100 | **16.05** 0.623 |
| 13 | **28.58** 1.125 | **23.01** 0.906 | **21.54** 0.848 | **3.25** 0.128 | **19.05** 0.750 | **3.25** 0.128 | **2.54** 0.100 | **16.05** 0.623 |
| 15 | **30.96** 1.219 | **24.61** 0.969 | **24.71** 0.973 | **3.25** 0.128 | **23.01** 0.906 | **3.25** 0.128 | **2.54** 0.100 | **16.05** 0.623 |
| 17 | **33.32** 1.312 | **26.97** 1.062 | **27.89** 1.098 | **3.25** 0.128 | **25.81** 1.016 | **3.25** 0.128 | **2.54** 0.100 | **16.05** 0.623 |
| 19 | **36.53** 1.438 | **29.36** 1.156 | **30.61** 1.205 | **3.25** 0.128 | **28.98** 1.141 | **3.25** 0.128 | **2.54** 0.100 | **16.05** 0.623 |
| 21 | **39.67** 1.562 | **31.75** 1.250 | **33.78** 1.330 | **3.25** 0.128 | **32.16** 1.266 | **3.25** 0.128 | **3.30** 0.130 | **15.29** 0.602 |
| 23 | **42.88** 1.688 | **34.93** 1.375 | **36.96** 1.455 | **3.73** 0.147 | **34.98** 1.377 | **3.91** 0.154 | **3.30** 0.130 | **15.29** 0.602 |
| 25 | **46.02** 1.812 | **38.10** 1.500 | **40.13** 1.580 | **3.73** 0.147 | **37.69** 1.484 | **3.91** 0.154 | **3.30** 0.130 | **15.29** 0.602 |

**Millimeters** Inches

# MIL-DTL-38999 Series I Connectors

## DEUTSCH DJT Series Connectors

### Jam Nut Receptacle

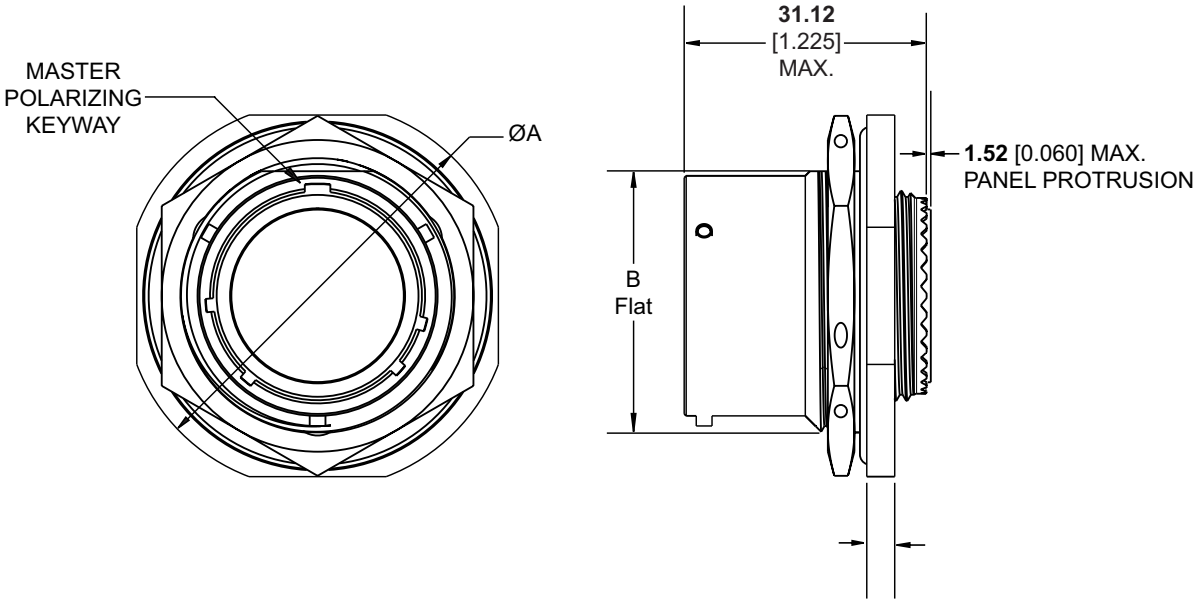


| Shell Size | ØA ±0.41 (0.016) | B Flat +.000 / -0.25 (0.010) | F +.000 / -0.25 (0.010) | ØG +.000 / -0.25 (0.010) |
|---|---|---|---|---|
| 09 | **30.18**<br>1.188 | **16.64**<br>0.655 | **17.02**<br>0.670 | **17.78**<br>0.700 |
| 11 | **34.93**<br>1.375 | **19.18**<br>0.755 | **19.58**<br>0.771 | **20.96**<br>0.825 |
| 13 | **38.10**<br>1.500 | **23.93**<br>0.942 | **24.26**<br>0.955 | **25.65**<br>1.010 |
| 15 | **41.28**<br>1.625 | **27.08**<br>1.066 | **27.56**<br>1.085 | **28.83**<br>1.135 |
| 17 | **44.45**<br>1.750 | **30.25**<br>1.191 | **30.73**<br>1.210 | **32.00**<br>1.260 |
| 19 | **49.23**<br>1.938 | **33.43**<br>1.316 | **33.91**<br>1.335 | **35.18**<br>1.385 |
| 21 | **52.37**<br>2.062 | **36.60**<br>1.441 | **37.08**<br>1.460 | **38.35**<br>1.510 |
| 23 | **55.58**<br>2.188 | **39.78**<br>1.566 | **40.26**<br>1.585 | **41.53**<br>1.635 |
| 25 | **58.72**<br>2.312 | **42.95**<br>1.691 | **43.43**<br>1.710 | **44.70**<br>1.760 |

**Millimeters** Inches

# MIL-DTL-38999 Series I Connectors

## DEUTSCH DJT Series Connectors

### Rear Panel Wall Mount Square Flange Receptacle

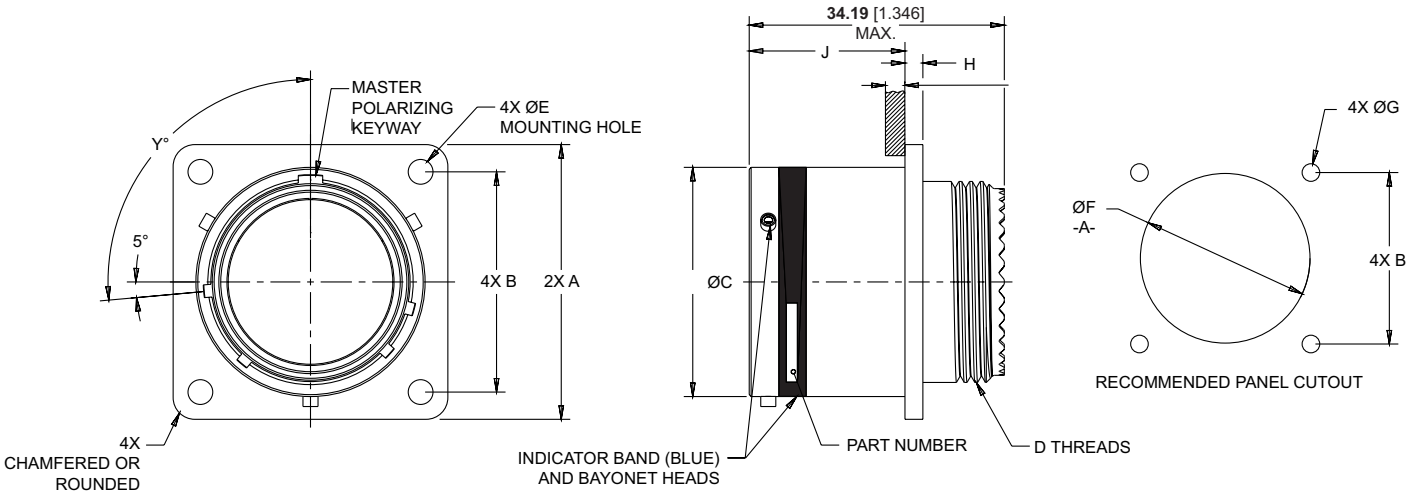


| Shell Size | A ±0.51 (0.020) | B ±0.13 (0.005) | C ±0.08 (0.003) | D THREAD UNEF-2A | ØE +0.25 -0.13 (+.010 -.005) | ØF Min. | ØG ±0.13 (0.005) | H +0.38 -0.00 (+.015 -.000) | J +0.00 -0.13 (+.000 -.005) |
|---|---|---|---|---|---|---|---|---|---|
| 09 | **23.83**<br>0.938 | **18.26**<br>0.719 | **14.48**<br>0.570 | **11.11-28**<br>0.4375-28 | **3.25**<br>0.128 | **13.11**<br>0.516 | **3.25**<br>0.128 | **2.16**<br>0.085 | **20.83**<br>0.820 |
| 11 | **26.19**<br>1.031 | **20.62**<br>0.812 | **17.73**<br>0.698 | **14.29-24**<br>0.5625-24 | **3.25**<br>0.128 | **16.87**<br>0.664 | **3.25**<br>0.128 | **2.16**<br>0.085 | **20.83**<br>0.820 |
| 13 | **28.58**<br>1.125 | **23.01**<br>0.906 | **21.54**<br>0.848 | **17.46-24**<br>0.6875-24 | **3.25**<br>0.128 | **19.05**<br>0.750 | **3.25**<br>0.128 | **2.16**<br>0.085 | **20.83**<br>0.820 |
| 15 | **30.96**<br>1.219 | **24.61**<br>0.969 | **24.71**<br>0.973 | **20.64-20**<br>0.8125-20 | **3.25**<br>0.128 | **23.01**<br>0.906 | **3.25**<br>0.128 | **2.16**<br>0.085 | **20.83**<br>0.820 |
| 17 | **33.32**<br>1.312 | **26.97**<br>1.062 | **27.89**<br>1.098 | **23.81-20**<br>0.9375-20 | **3.25**<br>0.128 | **25.81**<br>1.016 | **3.25**<br>0.128 | **2.16**<br>0.085 | **20.83**<br>0.820 |
| 19 | **36.53**<br>1.438 | **29.36**<br>1.156 | **30.61**<br>1.205 | **26.99-18**<br>1.0625-18 | **3.25**<br>0.128 | **28.98**<br>1.141 | **3.25**<br>0.128 | **2.16**<br>0.085 | **20.83**<br>0.820 |
| 21 | **39.67**<br>1.562 | **31.75**<br>1.250 | **33.78**<br>1.330 | **30.16-18**<br>1.1875-18 | **3.25**<br>0.128 | **32.16**<br>1.266 | **3.25**<br>0.128 | **2.92**<br>0.115 | **20.07**<br>0.790 |
| 23 | **42.88**<br>1.688 | **34.93**<br>1.375 | **36.96**<br>1.455 | **33.34-18**<br>1.3125-18 | **3.73**<br>0.147 | **34.98**<br>1.377 | **3.91**<br>0.154 | **2.92**<br>0.115 | **20.07**<br>0.790 |
| 25 | **46.02**<br>1.812 | **38.10**<br>1.500 | **40.13**<br>1.580 | **36.51-18**<br>1.4375-18 | **3.73**<br>0.147 | **37.69**<br>1.484 | **3.81**<br>0.150 | **2.92**<br>0.115 | **20.07**<br>0.790 |

**Millimeters** Inches

# MIL-DTL-38999 Series I Connectors

## DEUTSCH DJT Series Connectors

### Plug
### Type MS27467 / DEUTSCH DJT16

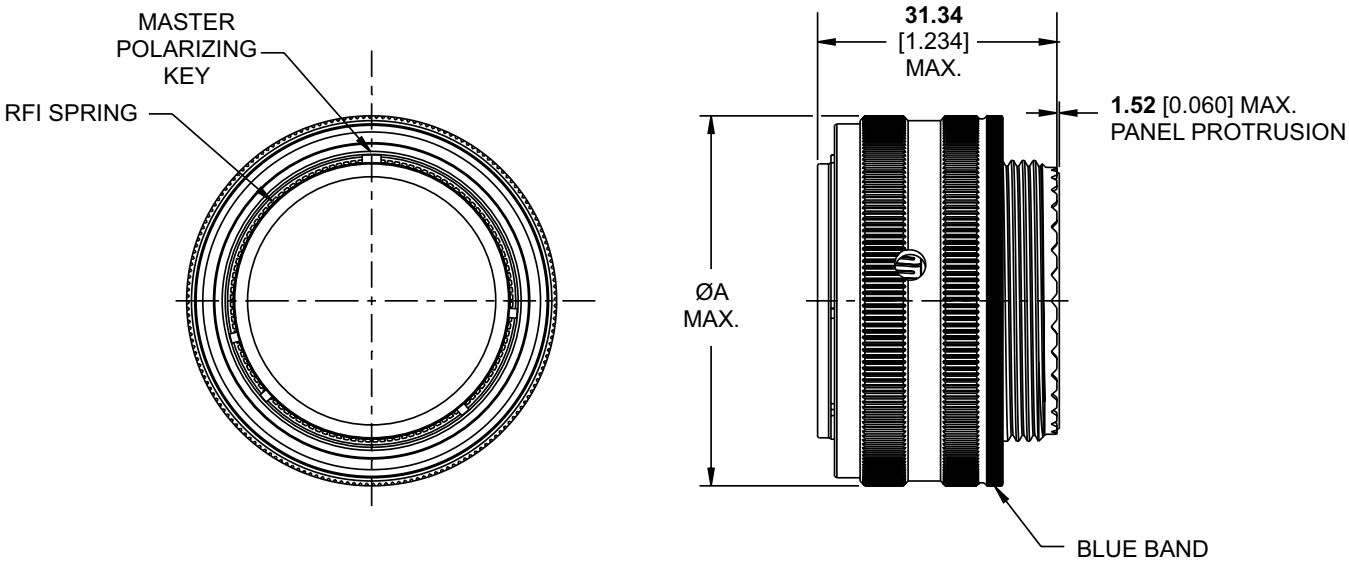


| Shell Size | A |
|---|---|
| 09 | **21.82**<br>.859 |
| 11 | **24.99**<br>.984 |
| 13 | **29.36**<br>1.156 |
| 15 | **32.54**<br>1.281 |
| 17 | **35.71**<br>1.406 |
| 19 | **38.51**<br>1.516 |
| 21 | **41.68**<br>1.641 |
| 23 | **44.86**<br>1.766 |
| 25 | **48.03**<br>1.891 |

**Millimeters** Inches

# MIL-DTL-38999 Series I Connectors

## DEUTSCH DJT Series Connectors

### Recommended Panel Cutouts

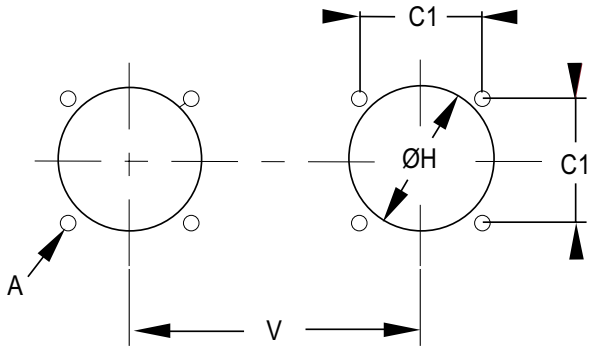


Square Flange Receptacle

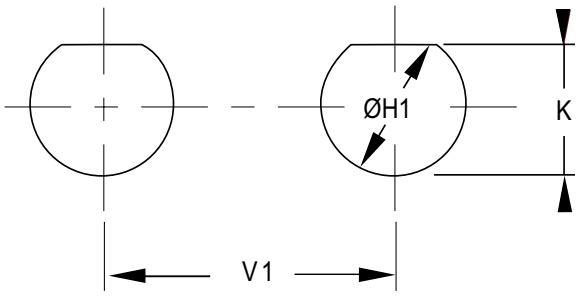


Jam Nut Receptacle

| Shell Size | C1 ±0.13 (0.005) | H Min. | A ±0.13 (0.005) | V Min. |
|---|---|---|---|---|
| 09 | **18.26**<br>0.719 | **13.11**<br>0.516 | **3.25**<br>0.128 | **25.58**<br>1.007 |
| 11 | **20.62**<br>0.812 | **16.87**<br>0.664 | **3.25**<br>0.128 | **27.00**<br>1.063 |
| 13 | **23.01**<br>0.906 | **19.05**<br>0.750 | **3.25**<br>0.128 | **30.20**<br>1.189 |
| 15 | **24.61**<br>0.969 | **23.01**<br>0.906 | **3.25**<br>0.128 | **33.30**<br>1.331 |
| 17 | **26.97**<br>1.062 | **25.81**<br>1.016 | **3.25**<br>0.128 | **36.50**<br>1.437 |
| 19 | **29.36**<br>1.156 | **28.98**<br>1.141 | **3.25**<br>0.128 | **39.30**<br>1.547 |
| 21 | **31.75**<br>1.250 | **32.16**<br>1.266 | **3.25**<br>0.128 | **42.50**<br>1.673 |
| 23 | **34.93**<br>1.375 | **34.98**<br>1.377 | **3.91**<br>0.154 | **45.70**<br>1.799 |
| 25 | **38.10**<br>1.500 | **37.69**<br>1.484 | **3.91**<br>0.154 | **48.80**<br>1.921 |

**Millimeters** Inches

| Shell Size | K +.000 / -0.25 (0.010) | ØH1 +.000 / -0.25 (0.010) | V1 Min. |
|---|---|---|---|
| 09 | **17.02**<br>0.670 | **17.78**<br>0.700 | **20.20**<br>1.189 |
| 11 | **19.58**<br>0.771 | **20.96**<br>0.825 | **32.60**<br>1.283 |
| 13 | **24.26**<br>0.955 | **25.65**<br>1.010 | **36.00**<br>1.417 |
| 15 | **27.56**<br>1.085 | **28.83**<br>1.135 | **39.60**<br>1.559 |
| 17 | **30.73**<br>1.210 | **32.00**<br>1.260 | **43.30**<br>1.705 |
| 19 | **33.91**<br>1.335 | **35.18**<br>1.385 | **47.00**<br>1.850 |
| 21 | **37.08**<br>1.460 | **38.35**<br>1.510 | **50.60**<br>1.992 |
| 23 | **40.26**<br>1.585 | **41.53**<br>1.635 | **54.20**<br>2.134 |
| 25 | **43.43**<br>1.710 | **44.70**<br>1.760 | **59.70**<br>2.350 |

**Millimeters** Inches

# MIL-DTL-38999 Series I Connectors

## DEUTSCH DJT Series Connectors

### Keying Options

(Viewed from Mating Face of the Receptacle Connector)

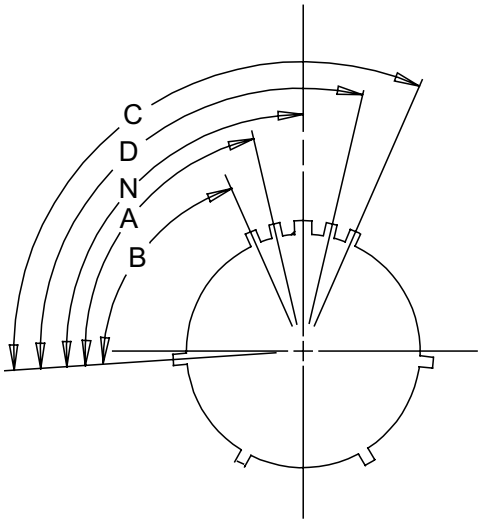


| Shell Size | Key Position (Degrees) | | | | |
|---|---|---|---|---|---|
| | N | A | B | C | D |
| **09** | 95 | 77 | — | — | 113 |
| **11** | 95 | 81 | 67 | 123 | 109 |
| **13** | 95 | 75 | 63 | 127 | 115 |
| **15** | 95 | 74 | 61 | 129 | 116 |
| **17** | 95 | 77 | 65 | 125 | 113 |
| **19** | 95 | 77 | 65 | 125 | 113 |
| **21** | 95 | 77 | 65 | 125 | 113 |
| **23** | 95 | 80 | 69 | 121 | 110 |
| **25** | 95 | 80 | 69 | 121 | 110 |

Degrees in table above are the distance between Datum E (that bisects first minor keyway) and the center line of the master keyway

## RELIABLE

- Self-locking threaded coupling
- 100% scoop proof
- Contact retention system provides excellent contact retention under severe vibration

## EMI PROTECTED

- Grounding fingers for excellent EMI protection
- Metal-to-metal bottoming for maximum EMI grounding protection
- Connector is grounded when the shells meet, even before the contacts are engaged
- Trapezoidal thread for excellent shell-to-shell continuity

## VERSATILE

- Variety of shell materials and finishes
- Wide range of backshells and accessories

# MIL-DTL-38999 Series III Connectors

### DEUTSCH DTS Series Aluminum Connectors
### DEUTSCH DTS-K, DTS-L and DTS-S Series Stainless Steel Connectors
### DEUTSCH ACT Series Composite Connectors

DEUTSCH MIL-DTL-38999 Series subminiature circular connectors offer a scoop-proof design for easy, reliable mating and a threaded coupling for excellent vibration resistance. They are available in three families distinguished by shell materials.

**DTS Series:** Lightweight aluminum shells for environmentally sealed versions and stainless steel for hermetic versions.

**DTS-K and DTS-S Series:** Stainless steel shells meeting the requirements of Classes K and S, suitable for firewall and high-temperature applications such as engines.

**ACT Series:** Composite shells, offering the lightest weight and highest resistance to corrosion.

Inserts are available in nine shell sizes, with contact arrangements meeting MIL-DTL-1560, along with additional arrangements, to help maximize flexibility in circuit configurations.

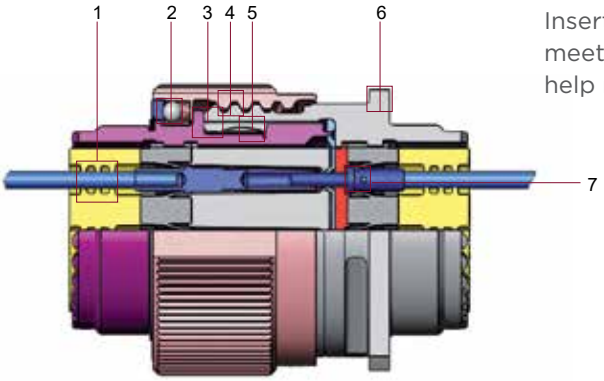


**Designed to Perform**

**1** High-quality silicone seals to help maximize tear resistance and sealing memory

**2** Self-locking threaded coupling

**3** 100% metal-to-metal bottoming for excellent EMI grounding protection

**4** Triple-start threads

**5** Grounding fingers providing excellent EMI protection

**6** Elongated mounting holes for flexible mounting with standard MIL-DTL-38999 box or wall mount receptacles

**7** Contact retention system provides excellent contact retention under severe vibration

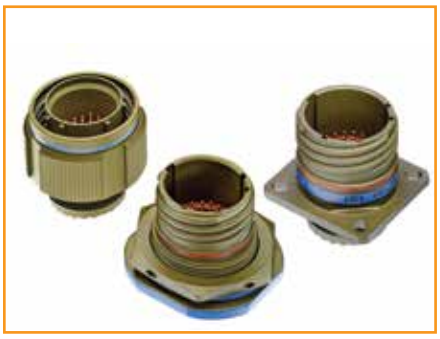

# MIL-DTL-38999 Series III Connectors

## DEUTSCH DTS and ACT Series Connectors

## Specifications

### MATERIALS

- **Shell:** Aluminum, composite, stainless steel, marine bronze
- **Plating:** Olive drab cadmium, passivated, electroless or electrodeposited nickel, nickel PTFE, black zinc nickel
- **Insert:** Thermoplastic and fluorinated silicone elastomer
- **EMI Spring Fingers:** Nickel or cadmium-plated beryllium copper
- **O-Ring:** Fluorinated silicone elastomer

### ENVIRONMENTAL

- **Temperature Range:**
  -65°C to +200°C
- **Fluid Resistance:** Fluid immersion per EIA 364.10, including resistance to
  MIL-PRF-5606: Hydraulic fluid
  MIL-DTL-83133: JP-8 aviation fuel
  MIL-PRF-7808: Lubricating oil
  MIL-PRF-23699: Lubricating oil
  MIL-A-8243: Deicing/defrosting fluid
  MIL-C-25769: Aircraft cleaning compound
  MIL-PRF-87937: Aircraft cleaning compound
  MIL-G-3056: Gasoline
- **Salt Spray:** 48 hours (Nickel finishes)
  500 hours (Cadmium, black zinc nickel, nickel PTFE, and passivated finishes)
  2000 hours (Composite classes M and J)
- **Thermal Cycling:** -65° to 150/175/200°C (max. temperature is class dependent)

### MECHANICAL

- **Sine Vibration:** Up to 60 g for 36 hr.
- **Random Vibration:** Up to 41.7 g for 16 hr. at 175° C
  Up to 50 g for 16 hr. at ambient temperature
- **Shock:** 300 g, 3 ms in the 3 axes
- **Durability:** 500 mating cycles (1500 cycles for composite connectors)
- **Contact Retention:**
  Size 23: 44 N (10 lb.)
  Size 22D: 44 N (10 lb.)
  Size 20: 67 N (15 lb.)
  Size 16: 111 N (25 lb.)
  Size 12: 111 N (25 lb.)
  Size 10: 111 N (25 lb.)
  Size 8: 111 N (25 lb.)

### ELECTRICAL

- **Shell-to-Shell Conductivity:**
  1.0 mV (nickel finish)
  2.5 mV (cadmium finish)
  3 mV (passivated finish)
- **Shielding Effectiveness:** >90 dB at 100 MHz, >65 dB through 10 GHz

# MIL-DTL-38999 Series III Connectors

## DEUTSCH DTS and ACT Series Connectors

### Voltage Rating

| Service Rating | Suggested Operating Voltage | | Test Voltage at Altitude ($VAC_{rms}$) | | | |
|---|---|---|---|---|---|---|
| | $VAC_{rms}$ | VDC | Sea Level | 50,000 Ft. | 70,000 Ft. | 100,000 Ft. |
| M | 400 | 550 | 1300 | 550 | 350 | 200 |
| N | 300 | 450 | 1000 | 400 | 260 | 200 |
| I | 600 | 850 | 1800 | 600 | 400 | 200 |
| II | 750 | 1050 | 2300 | 800 | 500 | 200 |

### Hermetic Connectors

- **Hermetic Seal:** Sintered glass
- **Leakage:** ≤16 $cm^3$/hr. (0.97 $in^3$/hr.) on mated pairs connected under 2.1 bar (4.38 psi)
- **Thermal Shock:** 10 cycles, 4°C max. to 90°C min.

### Current Rating

| Contact Size | Test Current (A) | Voltage Drop (mV) |
|---|---|---|
| 23 | 3 | 73 |
| 22D | 5 | 73 |
| 20 | 7.5 | 55 |
| 16 | 13 | 50 |
| 12 | 23 | 42 |
| 10 | 33 | 34 |
| 8* | 46 | 26 |

*When commercial power contact replaces twin-ax contact

### Thread Sizes

| Shell Size | Accessory Thread (6g 0.100R) | Mating Thread (0.1P-0.3L) | Jam Nut Thread (6g 0.100R) |
|---|---|---|---|
| 9 | M12 x 1.0 | .6250 | M17 x 1.0 |
| 11 | M15 x 1.0 | .7500 | M20 x 1.0 |
| 13 | M18 x 1.0 | .8750 | M25 x 1.0 |
| 15 | M22 x 1.0 | 1.0000 | M28 x 1.0 |
| 17 | M25 x 1.0 | 1.1875 | M32 x 1.0 |
| 19 | M28 x 1.0 | 1.2500 | M35 x 1.0 |
| 21 | M31 x 1.0 | 1.3750 | M38 x 1.0 |
| 23 | M34 x 1.0 | 1.5000 | M41 x 1.0 |
| 25 | M37 x 1.0 | 1.6250 | M44 x 1.0 |

# MIL-DTL-38999 Series III Connectors

## DEUTSCH DTS and ACT Series Connectors

**Part Numbering MIL-DTL-38999 and DEUTSCH Commerical Versions**

| | | | | | | | | | | |
|---|---|---|---|---|---|---|---|---|---|---|
| | | Commercial Composite | ACT | 26 | M | D | 35 | P | N | -6149 |
| | | Commercial Al/SS | DTS | 26 | F | 15 - | 35 | P | N | -6149 |
| | | Military | D38999 | /26 | F | D | 35 | P | N | -L/C |

| Commercial Composite | Commercial Alum./ Stainless | Military | Description |
|---|---|---|---|
| **RANGE** | | | |
| **ACT** | **DTS** | **D38999** | |
| **STYLE** | | | |
| **20** | **20** | **/20** | Square Flange Receptacle |
| **24** | **24** | **/24** | Jam Nut Receptacle |
| **26** | **26** | **/26** | Straight Plug |
| **—** | **13** | **—** | Box Mount Receptacle |
| **—** | **20** | **/21** | Hermetic Square Flange Receptacle |
| **—** | **24** | **/23** | Hermetic Jam Nut Receptacle |
| **—** | **21** | **/25** | Hermetic Solder Flange |
| **—** | **23** | **/27** | Hermetic Weld Flange |
| **CLASS** | | | |
| **ALUMINUM SHELL** | | | |
| **—** | **F** | **F** | Electroless Nickel Plated (48-hr. Salt Spray) |
| **—** | **G** | **G** | Space-Grade Electroless Nickel (48-hr. Salt Spray) |
| **—** | **T** | **T** | Nickel PTFE (500-hr. Salt Spray) |
| **—** | **W** | **W** | Olive Drab Cadmium (500-hr. Salt Spray) |
| **—** | **Z** | **Z** | Black Zinc Nickel (500-hr. Salt Spray) |
| **COMPOSITE SHELL** | | | |
| **M** | **—** | **M** | Electroless Nickel Plated (2000-hr. Salt Spray) |
| **J** | **—** | **J** | Olive Drab Cadmium (2000-hr. Salt Spray) |
| **STAINLESS STEEL SHELL** | | | |
| **—** | **K** | **K** | Passivated S.S., Firewall (500-hr. Salt Spray) |
| **—** | **S** | **S** | Electrodeposited Nickel S.S., Firewall (500-hr. Salt Spray) |
| **—** | **L** | **L** | Electrodeposited Nickel (48-hr. Salt Spray) |
| **HERMETIC** | | | |
| **—** | **Y** | **Y** | Stainless Steel, Passivated |
| **—** | **N** | **N** | Stainless Steel, Electrodeposited Nickel Plated |
| **—** | **H** | **H** | Space Grade |
| **SHELL SIZES** | | | |
| **9 (A), 11 (B), 13 (C), 15 (D), 17 (E), 19 (F), 21 (G), 23 (H), 25 (J)** | | | Numbers = DTS Commercial; (Letters) = Military/ACT Commercial |
| **INSERT ARRANGEMENTS** | | | |
| | | | See Insert Arrangement Tables, pages 10-17 and 35-36 |
| **CONTACTS** | | | |
| **P** Pin, | **H** 1500-Cycle Pin | | |
| **S** Socket, | **J** 1500-Cycle Socket | | |
| **A** Less Pin (with intent to use nonstandard contacts) | | | |
| **B** Less Socket (with intent to use nonstandard contacts) | | | |
| **CONTACTS FOR HERMETIC CONNECTORS** | | | |
| **P** Pin, Solder Cup, | **S** Socket, Solder Cup | | |
| **C** PC Tail Pin, | **D** PC Tail Socket | | |
| **X** Eyelet Pin, | **Z** Eyelet Socket | | |
| **KEYING** | | | |
| **N, A, B, C, D, E, U** | | | N = Normal, U = Universal |
| **MODIFICATION CODE** | | | |
| **6149** | **6149** | **L/C** | Less Contacts |

# MIL-DTL-38999 Series III Connectors

## DEUTSCH DTS and ACT Series Connectors

### Part Numbering
### EN3645 and DEUTSCH Commercial Versions

**EN3645 F 0 D N 35 M N**

**RANGE**
**EN3645**

**FINISH**
**METAL SHELLS**
**F** Nickel
**K** Passivated
**W** Olive Drab Cadmium
**COMPOSITE SHELLS**
**J** Olive Drab Cadmium
**M** Nickel

**SHELL TYPE**
**0** Square Flange Receptacle
**7** Jam Nut Receptacle
**6** Straight Plug

**SHELL SIZE**
**A, B, C, D, E, F, G, H, J**

**CAVITY TYPE**
**N** Normal (Standard)
**G** Grounded (Signal Contact Bodies Grounded to Shell)
**R** Reinforced (For Power Contacts)
**L** Polarized (Keyed for Quadrax or Twinax Contacts)
**Q** Polarized and Grounded
Note: L and Q are, respectively, legacy to N and G

**INSERT ARRANGEMENT**
See Insert Arrangement Tables, page 10

**CONTACT TYPE**
**M** Pin
**F** Socket
**A** Less Pin
**B** Less Socket

**KEYING POSITIONS**
**N** (Normal)
**A, B, C, D, E**

# MIL-DTL-38999 Series III Connectors

## DEUTSCH DTS and ACT Series Connectors

| Insert | | Contact Size/Quantity | | | | | | | | | | | | | |
|---|---|---|---|---|---|---|---|---|---|---|---|---|---|---|---|
| DTS Commercial | Military (Commercial ACT) | 8 Twinax | 8 Coax | 8 Power | 12 Twinax | 12 Coax | 10 | 12 | 16 | 20 | 22D | 23 | Includes K Class | Uses 38999/62-8* Boots | Inactive: Superseded by |
| 09-07 | A7 (A07) | | | | | | | | | | 7 | | | | |
| 09-23 | A23 | | | | | | | | | | | 9 | | | |
| 09-35 | A35 | | | | | | | | | | 6 | | ✔ | | |
| 09-98 | A98 | | | | | | | | | 3 | | | ✔ | | |
| 11-02 | B2 (B02) | | | | | | | | 2 | | | | | | |
| 11-04 | B4 (B04) | | | | | | | | | 4 | | | | | |
| 11-05 | B5 (B05) | | | | | | | | | 5 | | | | | |
| 11-23 | B23 | | | | | | | | | | | 19 | | | |
| 11-35 | B35 | | | | | | | | | | 13 | | ✔ | | |
| 11-98 | B98 | | | | | | | | | 6 | | | ✔ | | |
| 11-99 | B99 | | | | | | | | | 7 | | | ✔ | | |
| 13-04 | C4 (C04) | | | | | | | | 4 | | | | | | |
| 13-08 | C8 (C08) | | | | | | | | | 8 | | | ✔ | | |
| 13-23 | C23 | | | | | | | | | | | 32 | | | |
| 13-35 | C35 | | | | | | | | | | 22 | | ✔ | | |
| 13-98 | C98 | | | | | | | | | 10 | | | ✔ | | |
| 15-05 | D5 (D05) | | | | | | | | 5 | | | | ✔ | | |
| 15-15 | D15 | | | | | | | | 1 | 14 | | | | | |
| 15-18 | D18 | | | | | | | | | 18 | | | ✔ | | |
| 15-19 | D19 | | | | | | | | | 19 | | | ✔ | | |
| 15-23 | D23 | | | | | | | | | | | 55 | | | |
| 15-26 | D26 | | | | | | | | 2 | | 24 | | | | |
| 15-35 | D35 | | | | | | | | | | 37 | | ✔ | | |
| 15-97 | D97 | | | | | | | | 4 | 8 | | | ✔ | | |
| 17-02 | E2 (E02) | 1 | | | | | | | | | 38 | | | | 17-03 |
| 17-03 | E3 (E03) | 1 | | | | | | | | | 38 | | | ✔ | |
| 17-06 | E6 (E06) | | | | | | | 6 | | | | | ✔ | | |
| 17-08 | E8 (E08) | | | | | | | | 8 | | | | ✔ | | |
| 17-11 | E11 | | | | 2 | 1 | | | | 8 | | | | | |
| 17-19 | E19 | | | | | | | | 4 | 11 | 4 | | | | |
| 17-20 | E20 | | | | | | | 4 | | | 16 | | | | |
| 17-22 | E22 | 2 | | | | | | 2 | | | | | | | |
| 17-23 | E23 | | | | | | | | | | | 73 | | | |
| 17-24 | E24 | | | 2 | | | | | | | 22 | | | | |
| 17-26 | E26 | | | | | | | | | 26 | | | ✔ | | |
| 17-35 | E35 | | | | | | | | | | 55 | | ✔ | | |
| 17-99 | E99 | | | | | | | | 2 | 21 | | | ✔ | | |
| 19-11 | F11 | | | | | | | | 11 | | | | ✔ | | |
| 19-18 | F18 | 4 | | | | | | | | | 14 | | | | 19-19 |
| 19-19 | F19 | 4 | | | | | | | | | 14 | | | ✔ | |
| 19-23 | E23 | | | | | | | | | | | 88 | | | |
| 19-28 | F28 | | | | | | | | 2 | 26 | | | | | |

Blue shaded entries are not Mil Spec. Green shading indicates high-density inserts.

# MIL-DTL-38999 Series III Connectors

## DEUTSCH DTS and ACT Series Connectors

| Insert | | Contact Size/Quantity | | | | | | | | | | | | | |
|---|---|---|---|---|---|---|---|---|---|---|---|---|---|---|---|
| DTS Commercial | Military (Commercial ACT) | 8 Twinax | 8 Coax | 8 Power | 12 Twinax | 12 Coax | 10 | 12 | 16 | 20 | 22D | 23 | Includes K Class | Uses 38999/62-8* Boots | Inactive: Superseded by |
| 19-32 | F32 | | | | | | | | | 32 | | | ✔ | | |
| 19-35 | F35 | | | | | | | | | | 66 | | ✔ | | |
| 21-11 | G11 | | | | | | | 11 | | | | | | | |
| 21-16 | G16 | | | | | | | | 16 | | | | | | |
| 21-20 | G20 | 2 | | | | | | | | 18 | | | | | |
| 21-23 | G23 | | | | | | | | | | | 121 | | | |
| 21-35 | G35 | | | | | | | | | | 79 | | ✔ | | |
| 21-39 | G39 | | | | | | | | 2 | 37 | | | ✔ | | |
| 21-41 | G41 | | | | | | | | | 41 | | | ✔ | | |
| 21-48 | G48 | | | 4 | | | | | | | | | | | |
| 21-75 | G75 | 4 | | | | | | | | | | | | | 21-76 |
| 21-76 | G76 | 4 | | | | | | | | | | | | ✔ | |
| 23-06 | H6 (H06) | 6 | | | | | | | | | | | | | |
| 23-21 | H21 | | | | | | | | 21 | | | | | | |
| 23-23 | H23 | | | | | | | | | | | 151 | | | |
| 23-35 | H35 | | | | | | | | | | 100 | | | | |
| 23-53 | H53 | | | | | | | | | 53 | | | ✔ | | |
| 23-54 | H54 | | | | | | | 4 | 9 | | 40 | | | | |
| 23-55 | H55 | | | | | | | | | 55 | | | | | |
| 23-63 | H63 | | | | | | | 4 | 4 | | 49 | | | | |
| 25-04 | J4 (J04) | | | | | | | | 8 | 48 | | | ✔ | | |
| 25-07 | J7 (J07) | 2 | | | | | | | | | 97 | | | | 25-09 |
| 25-08 | J8 (J08) | 8 | | | | | | | | | | | | | 25-10 |
| 25-09 | J9 (J09) | 2 | | | | | | | | | 97 | | | ✔ | |
| 25-10 | J10 | 8 | | | | | | | | | | | | ✔ | |
| 25-11 | J11 | | | | | | 9 | | | 2 | | | | | |
| 25-17 | J17 | 6 | | | | | | | | | 36 | | | | |
| 25-19 | J19 | | | | | | | 19 | | | | | | | |
| 25-20 | J20 | 3 | | | | 4 | | | 13 | 10 | | | | | 25-21 |
| 25-21 | J21 | 3 | | | | 4 | | | 13 | 10 | | | | ✔ | |
| 25-23 | J23 | | | | | | | | | | | 187 | | | |
| 25-24 | J24 | | | | | | | 12 | 12 | | | | | | |
| 25-29 | J29 | | | | | | | | 29 | | | | | | |
| 25-35 | J35 | | | | | | | | | | 128 | | ✔ | | |
| 25-37 | J37 | | | | | | | | 37 | | | | | | |
| 25-43 | J43 | | | | | | | | 20 | 23 | | | | | |
| 25-46 | J46 | | 2 | | | | | | 4 | 40 | | | | | 25-47 |
| 25-47 | J47 | | 2 | | | | | | 4 | 40 | | | | ✔ | |
| 25-61 | J61 | | | | | | | | | 61 | | | ✔ | | |
| 25-90 | J90 | 2 | | | | | | | 4 | 40 | | | | | 25-91 |
| 25-91 | J91 | 2 | | | | | | | 4 | 40 | | | | ✔ | |

Blue shaded entries are not Mil Spec.
Green shading indicates high-density inserts.

# MIL-DTL-38999 Series III Connectors

## DEUTSCH DTS and ACT Series Connectors

### Square Flange Receptacle Type 20

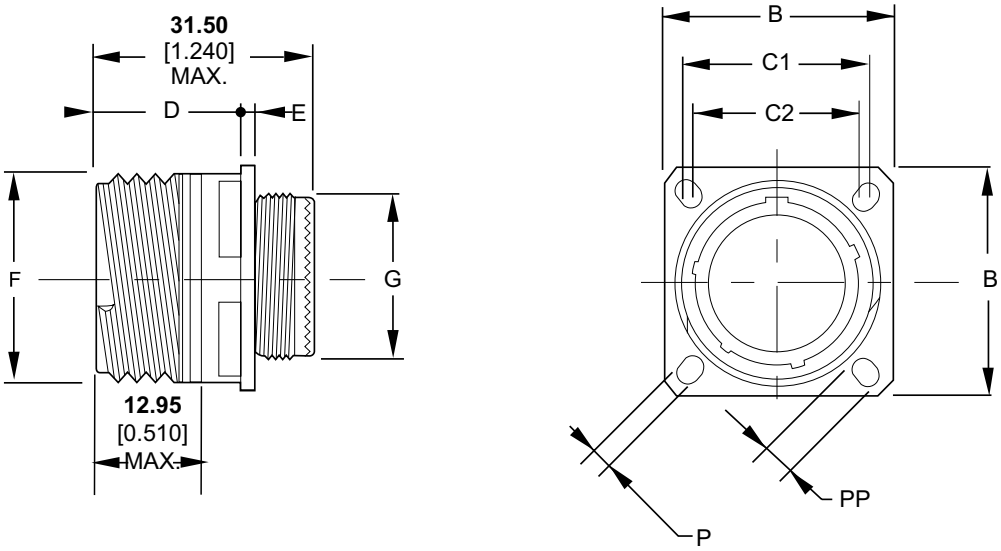


| Shell Size | B | C1 | C2 | D Max. | E Max. | F | G | P | PP | Mass (g) by Shell Type | | |
|---|---|---|---|---|---|---|---|---|---|---|---|---|
| | | | | | | | | | | Al | SS | Composite |
| 09 | **23.80**<br>0.937 | **18.26**<br>0.719 | **15.09**<br>0.594 | **20.90**<br>0.823 | **2.50**<br>0.098 | **15.75**<br>0.620 | **11.90**<br>0.469 | **3.25**<br>0.128 | **5.49**<br>0.216 | 10 | 27 | 9 |
| 11 | **26.20**<br>1.031 | **20.62**<br>0.812 | **18.26**<br>0.719 | **20.90**<br>0.823 | **2.50**<br>0.098 | **18.90**<br>0.744 | **14.90**<br>0.587 | **3.25**<br>0.128 | **4.93**<br>0.194 | 16 | 36 | 11 |
| 13 | **28.60**<br>1.126 | **23.01**<br>0.906 | **20.62**<br>0.812 | **20.90**<br>0.823 | **2.50**<br>0.098 | **22.10**<br>0.870 | **17.90**<br>0.705 | **3.25**<br>0.128 | **4.93**<br>0.194 | 19 | 45 | 14 |
| 15 | **31.00**<br>1.220 | **24.61**<br>0.969 | **23.01**<br>0.906 | **20.90**<br>0.823 | **2.50**<br>0.098 | **25.25**<br>0.994 | **21.90**<br>0.862 | **3.25**<br>0.128 | **4.93**<br>0.194 | 25 | 56 | 18 |
| 17 | **33.30**<br>1.311 | **26.97**<br>1.062 | **24.61**<br>0.969 | **20.90**<br>0.823 | **2.50**<br>0.098 | **29.95**<br>1.179 | **24.90**<br>0.980 | **3.25**<br>0.128 | **4.93**<br>0.194 | 32 | 74 | 23 |
| 19 | **36.50**<br>1.437 | **29.36**<br>1.156 | **26.97**<br>1.062 | **20.90**<br>0.823 | **2.50**<br>0.098 | **31.55**<br>1.242 | **27.90**<br>1.098 | **3.25**<br>0.128 | **4.93**<br>0.194 | 39 | 78 | 26 |
| 21 | **39.70**<br>1.563 | **31.75**<br>1.250 | **29.36**<br>1.156 | **20.10**<br>0.791 | **3.20**<br>0.126 | **34.70**<br>1.366 | **30.90**<br>1.217 | **3.25**<br>0.128 | **4.93**<br>0.194 | 45 | 95 | 31 |
| 23 | **42.90**<br>1.689 | **34.93**<br>1.375 | **31.75**<br>1.250 | **20.10**<br>0.791 | **3.20**<br>0.126 | **37.90**<br>1.492 | **33.90**<br>1.335 | **3.91**<br>0.154 | **6.15**<br>0.242 | 54 | 108 | 36 |
| 25 | **46.00**<br>1.811 | **38.10**<br>1.500 | **34.93**<br>1.375 | **20.10**<br>0.791 | **3.20**<br>0.126 | **41.10**<br>1.618 | **36.90**<br>1.453 | **3.91**<br>0.154 | **6.15**<br>0.242 | 59 | 120 | 43 |

**Millimeters** Inches

# MIL-DTL-38999 Series III Connectors

## DEUTSCH DTS and ACT Series Connectors

### Jam Nut Receptacle
### Type 24

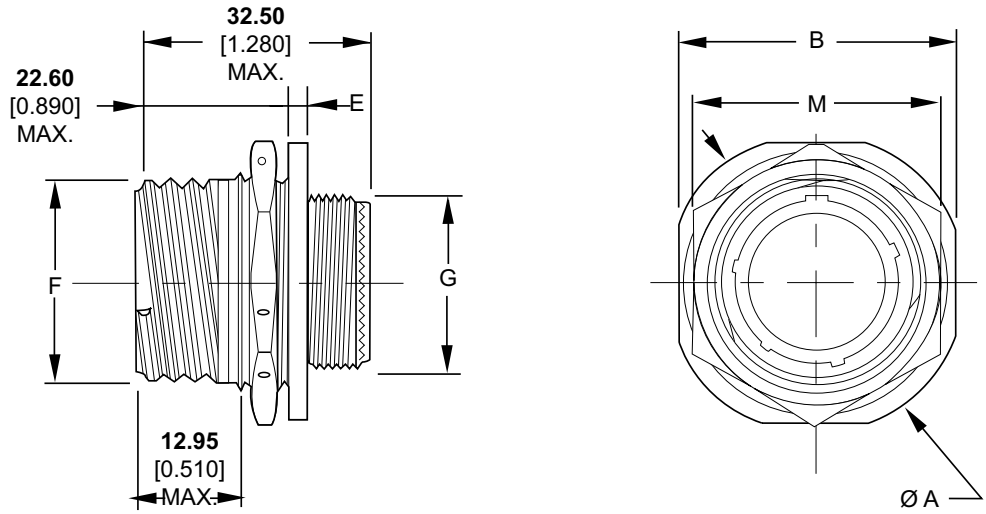


| Shell Size | A | B | E | F | G | M Max. | Mass (g) by Shell Type | | |
|---|---|---|---|---|---|---|---|---|---|
| | | | | | | | Al | SS | Composite |
| 09 | **30.20**<br>1.189 | **27.00**<br>1.063 | **2.20**<br>0.087 | **15.75**<br>0.620 | **11.90**<br>0.469 | **24.00**<br>0.945 | 15 | 40 | 11 |
| 11 | **34.90**<br>1.374 | **31.80**<br>1.252 | **2.20**<br>0.087 | **18.90**<br>0.744 | **14.90**<br>0.587 | **27.00**<br>1.063 | 21 | 50 | 14 |
| 13 | **38.10**<br>1.500 | **34.90**<br>1.374 | **2.20**<br>0.087 | **22.10**<br>0.870 | **17.90**<br>0.705 | **32.00**<br>1.260 | 27 | 60 | 18 |
| 15 | **41.30**<br>1.626 | **38.10**<br>1.500 | **2.20**<br>0.087 | **25.25**<br>0.994 | **21.90**<br>0.862 | **36.00**<br>1.417 | 32 | 72 | 23 |
| 17 | **44.50**<br>1.752 | **41.30**<br>1.626 | **2.20**<br>0.087 | **29.95**<br>1.179 | **24.90**<br>0.980 | **37.00**<br>1.457 | 40 | 92 | 29 |
| 19 | **49.20**<br>1.937 | **46.00**<br>1.811 | **3.00**<br>0.118 | **31.55**<br>1.242 | **27.90**<br>1.098 | **41.00**<br>1.614 | 49 | 96 | 35 |
| 21 | **52.40**<br>2.063 | **49.20**<br>1.937 | **3.00**<br>0.118 | **34.70**<br>1.366 | **30.90**<br>1.217 | **46.00**<br>1.811 | 54 | 114 | 38 |
| 23 | **55.60**<br>2.189 | **52.40**<br>2.063 | **3.00**<br>0.118 | **37.90**<br>1.492 | **33.90**<br>1.335 | **50.00**<br>1.969 | 65 | 130 | 46 |
| 25 | **58.70**<br>2.311 | **55.60**<br>2.189 | **3.00**<br>0.118 | **41.10**<br>1.618 | **36.90**<br>1.453 | **51.23**<br>2.017 | 73 | 143 | 55 |

**Millimeters** Inches

# MIL-DTL-38999 Series III Connectors

## DEUTSCH DTS and ACT Series Connectors

**Plug**
**Type 26**

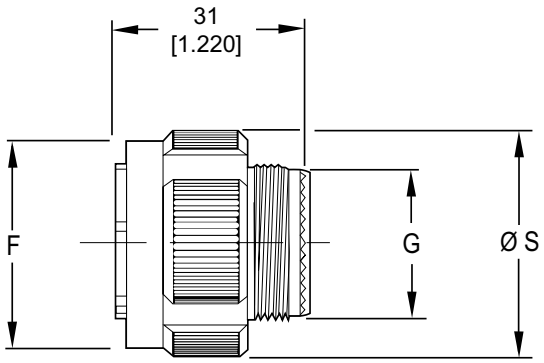


| Shell Size | F Max. | G | S Max. | Mass (g) by Shell Type | | |
|---|---|---|---|---|---|---|
| | | | | Al | SS | Composite |
| **09** | **18.40**<br>0.724 | **11.90**<br>0.469 | **21.80**<br>0.858 | **15** | **36** | **9** |
| **11** | **21.10**<br>0.831 | **14.90**<br>0.587 | **25.00**<br>0.984 | **20** | **50** | **13** |
| **13** | **25.40**<br>1.000 | **17.90**<br>0.705 | **29.40**<br>1.157 | **27** | **64** | **18** |
| **15** | **28.70**<br>1.130 | **21.90**<br>0.862 | **32.50**<br>1.280 | **34** | **80** | **23** |
| **17** | **32.20**<br>1.268 | **24.90**<br>0.980 | **35.70**<br>1.406 | **37** | **88** | **25** |
| **19** | **34.90**<br>1.374 | **27.90**<br>1.098 | **38.50**<br>1.516 | **48** | **102** | **32** |
| **21** | **38.10**<br>1.500 | **30.90**<br>1.217 | **41.70**<br>1.642 | **55** | **117** | **35** |
| **23** | **41.10**<br>1.618 | **33.90**<br>1.335 | **44.90**<br>1.768 | **67** | **131** | **41** |
| **25** | **44.30**<br>1.744 | **36.90**<br>1.453 | **48.00**<br>1.890 | **71** | **145** | **48** |

**Millimeters** Inches

### Coupling Torque: Plug to Receptacle

| Shell Size | Engagement and Disengagement (Max.) | | Minimum Disengagement | |
|---|---|---|---|---|
| | Nm | Lb.-in. | Nm | Lb.-in. |
| 09 | 0.9 | 8 | 0.2 | 2 |
| 11 | 1.4 | 12 | | |
| 13 | 1.8 | 16 | | |
| 15 | 2.3 | 20 | 0.3 | 3 |
| 17 | 2.7 | 24 | | |
| 19 | 3.2 | 28 | | |
| 21 | 3.6 | 32 | 0.6 | 5 |
| 23 | 4.1 | 36 | | |
| 25 | 4.6 | 40 | | |

# MIL-DTL-38999 Series III Connectors

## DEUTSCH DTS and ACT Series Connectors

### Mated/Unmated Dimensions

### Square Flange Receptacle to Plug

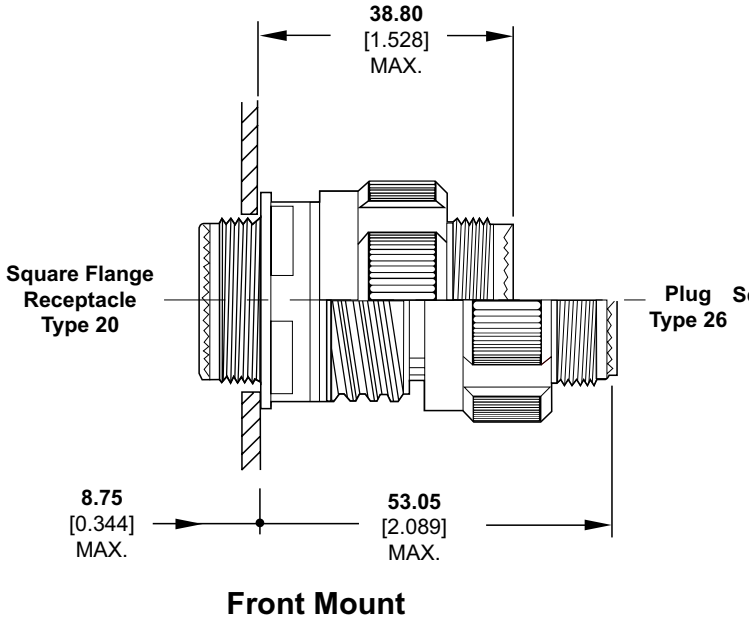


**Front Mount**

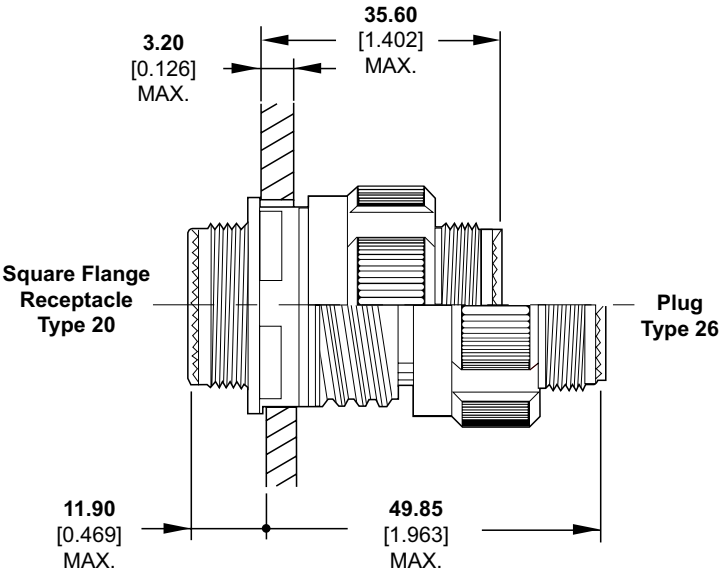


**Rear Mount**

### Jam Nut Receptacle to Plug

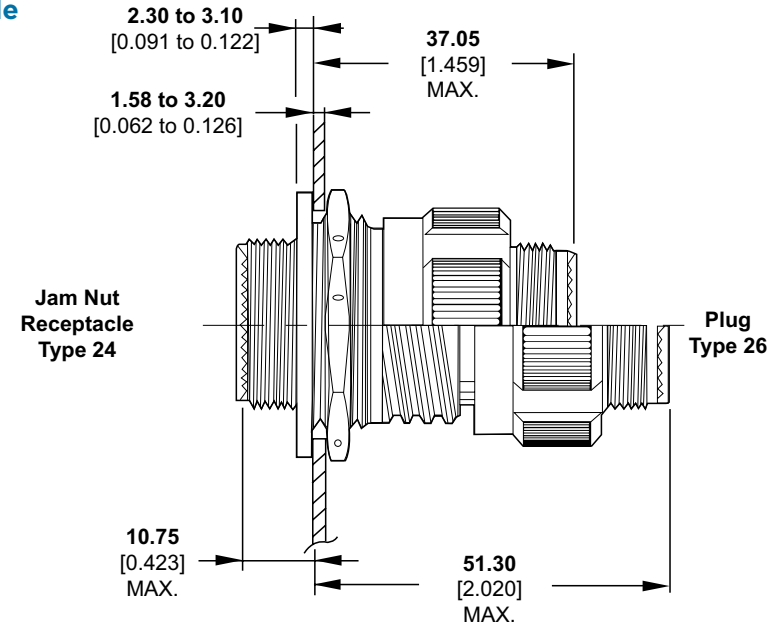

# MIL-DTL-38999 Series III Connectors

## DEUTSCH DTS and ACT Series Connectors

### Dummy Receptacle
### Type PR

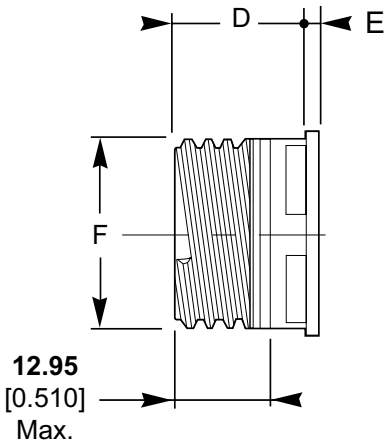


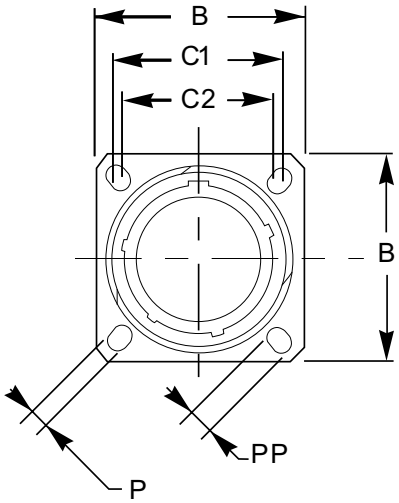


| Shell Size | B | C1 | C2 | D Max. | E Max. | F | G | P | PP | Mass (g) by Shell Type | | |
|---|---|---|---|---|---|---|---|---|---|---|---|---|
| | | | | | | | | | | Al | SS | Composite |
| 09 | **23.80**<br>0.937 | **18.26**<br>0.719 | **15.09**<br>0.594 | **20.90**<br>0.823 | **2.50**<br>0.098 | **15.73**<br>0.619 | **3.25**<br>0.128 | **5.49**<br>0.216 | **5.49**<br>0.216 | 7 | 10 | 8 |
| 11 | **26.20**<br>1.031 | **20.62**<br>0.812 | **18.26**<br>0.719 | **20.90**<br>0.823 | **2.50**<br>0.098 | **18.91**<br>0.744 | **3.25**<br>0.128 | **4.93**<br>0.194 | **4.93**<br>0.194 | 11 | 16 | 11 |
| 13 | **28.60**<br>1.126 | **23.01**<br>0.906 | **20.62**<br>0.812 | **20.90**<br>0.823 | **2.50**<br>0.098 | **22.08**<br>0.869 | **3.25**<br>0.128 | **4.93**<br>0.194 | **4.93**<br>0.194 | 15 | 22 | 14 |
| 15 | **31.00**<br>1.220 | **24.61**<br>0.969 | **23.01**<br>0.906 | **20.90**<br>0.823 | **2.50**<br>0.098 | **25.26**<br>0.994 | **3.25**<br>0.128 | **4.93**<br>0.194 | **4.93**<br>0.194 | 18 | 31 | 18 |
| 17 | **33.30**<br>1.311 | **26.97**<br>1.062 | **24.61**<br>0.969 | **20.90**<br>0.823 | **2.50**<br>0.098 | **29.96**<br>1.180 | **3.25**<br>0.128 | **4.93**<br>0.194 | **4.93**<br>0.194 | 22 | 46 | 23 |
| 19 | **36.50**<br>1.437 | **29.36**<br>1.156 | **26.97**<br>1.062 | **20.90**<br>0.823 | **2.50**<br>0.098 | **31.54**<br>1.242 | **3.25**<br>0.128 | **4.93**<br>0.194 | **4.93**<br>0.194 | 26 | 51 | 26 |
| 21 | **39.70**<br>1.563 | **31.75**<br>1.250 | **29.36**<br>1.156 | **20.10**<br>0.791 | **3.20**<br>0.126 | **34.72**<br>1.367 | **3.25**<br>0.128 | **4.93**<br>0.194 | **4.93**<br>0.194 | 30 | 65 | 31 |
| 23 | **42.90**<br>1.689 | **34.93**<br>1.375 | **31.75**<br>1.250 | **20.10**<br>0.791 | **3.20**<br>0.126 | **37.90**<br>1.492 | **3.91**<br>0.154 | **6.15**<br>0.242 | **6.15**<br>0.242 | 33 | 78 | 36 |
| 25 | **46.00**<br>1.811 | **38.10**<br>1.500 | **34.93**<br>1.375 | **20.10**<br>0.791 | **3.20**<br>0.126 | **41.07**<br>1.617 | **36.90**<br>1.453 | **3.91**<br>0.154 | **6.15**<br>0.242 | 36 | 97 | 43 |

**Millimeters** Inches

# MIL-DTL-38999 Series III Connectors

## DEUTSCH DTS and ACT Series Connectors

### Recommended Panel Cutouts

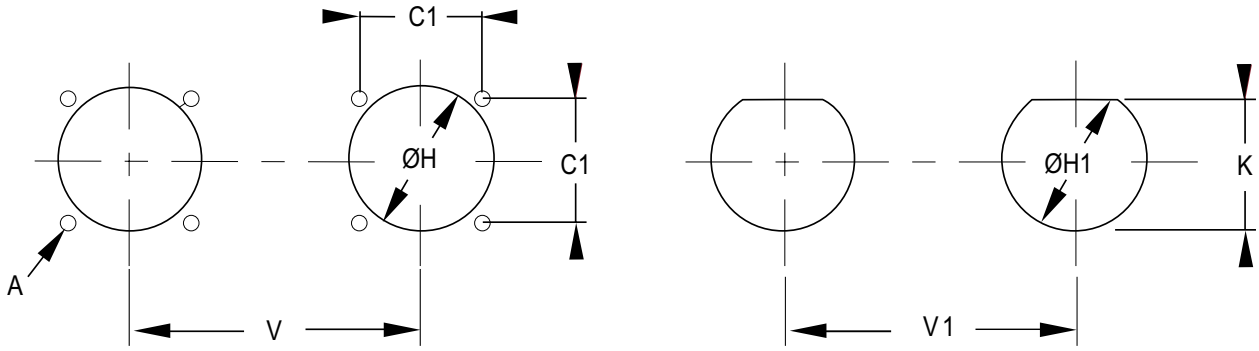


Square Flange Receptacle

Jam Nut Receptacle

| Shell Size | A | C1 | H Min. Front | H Min. Rear | H1 Max. | K Max. | V Min. | V1 Min. |
|---|---|---|---|---|---|---|---|---|
| 9 | 3.25 0.128 | **18.26** 0.719 | **13.11** 0.516 | **16.66** 0.656 | **17.78** 0.700 | **16.70** 0.657 | **25.58** 1.007 | **20.20** 1.189 |
| 11 | | **20.62** 0.812 | **15.08** 0.594 | **22.22** 0.875 | **20.88** 0.822 | **19.53** 0.769 | **27.00** 1.063 | **32.60** 1.283 |
| 13 | | **23.01** 0.906 | **19.05** 0.750 | **23.42** 0.922 | **25.58** 1.007 | **24.26** 0.995 | **30.20** 1.189 | **36.00** 1.417 |
| 15 | | **24.61** 0.969 | **23.01** 0.906 | **26.59** 1.047 | **28.80** 1.134 | **27.53** 1.084 | **33.30** 1.331 | **39.60** 1.559 |
| 17 | | **26.97** 1.062 | **25.81** 1.106 | **30.96** 1.219 | **31.98** 1.259 | **30.68** 1.208 | **36.50** 1.437 | **43.30** 1.705 |
| 19 | | **29.36** 1.156 | **28.98** 1.141 | **32.94** 1.297 | **35.15** 1.384 | **33.86** 1.333 | **39.30** 1.547 | **47.00** 1.850 |
| 21 | | **31.75** 1.250 | **32.16** 1.266 | **36.12** 1.422 | **38.28** 1.507 | **37.06** 1.459 | **42.50** 1.673 | **50.60** 1.992 |
| 23 | 3.91 0.154 | **34.93** 1.375 | **34.93** 1.375 | **39.29** 1.547 | **41.50** 1.634 | **40.01** 1.575 | **45.70** 1.799 | **54.20** 2.134 |
| 25 | | **38.10** 1.500 | **37.69** 1.484 | **42.47** 1.672 | **44.68** 1.759 | **43.41** 1.709 | **48.80** 1.921 | **59.70** 2.350 |

**Millimeters** Inches

# MIL-DTL-38999 Series III Connectors

## DEUTSCH DTS and ACT Series Connectors

### Keying Options

(Viewed from Mating Face of the Receptacle Connector)

| Shell Size | Key Position | Polarization (Degrees) | | | |
|---|---|---|---|---|---|
| | | A | B | C | D |
| 09 | N | 105 | 140 | 215 | 265 |
| | A | 102 | 132 | 248 | 320 |
| | B | 80 | 118 | 230 | 312 |
| | C | 35 | 140 | 205 | 275 |
| | D | 64 | 155 | 234 | 304 |
| | E | 91 | 131 | 197 | 240 |
| 11, 13, 15 | N | 95 | 141 | 208 | 236 |
| | A | 113 | 156 | 182 | 292 |
| | B | 90 | 145 | 195 | 252 |
| | C | 53 | 156 | 220 | 255 |
| | D | 119 | 146 | 176 | 298 |
| | E | 51 | 141 | 184 | 242 |
| 17, 19, 21, 23, 25 | N | 80 | 142 | 196 | 293 |
| | A | 135 | 170 | 200 | 310 |
| | B | 49 | 169 | 200 | 244 |
| | C | 66 | 140 | 200 | 257 |
| | D | 62 | 145 | 180 | 280 |
| | E | 79 | 153 | 197 | 272 |

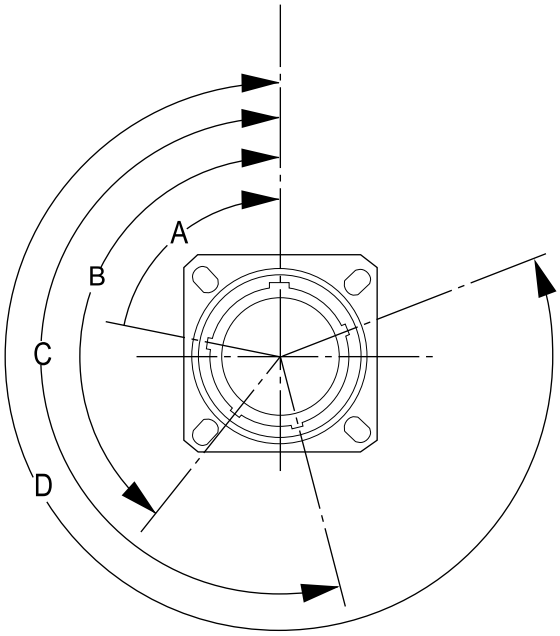

**DEPENDABLE**

- Secure breech lock coupling
- 100% scoop-proof
- Pin-to-pin mating protection helps prevent failures

**RUGGED**

- Mated connectors help withstand high-impact shock
- Rear accessory threads help provide increased strength
- >500-mating-cycle durability
- Corrosion resistant

**EMI PROTECTED**

- Grounding fingers for excellent EMI protection
- Connector is grounded when the shells meet, even before the contacts are engaged

**EASY INSTALLATION**

- Blind-mateable grounding fingers to help provide a safer assembly during mating
- Requires only 90° rotation to engage and disengage

# MIL-DTL-38999 Series IV Connectors

## DEUTSCH DIV Series Connectors

DEUTSCH DIV Series connectors from TE Connectivity (TE) are high-performance MIL-DTL-38999 connectors for use in high shock, vibration and EMI environments where reliability is essential.

Qualified to MIL-DTL-38999 specifications, DEUTSCH DIV Series connectors are designed and built using the high-vibration capable breech lock coupling mechanism that only requires 90° of rotation to engage and disengage.

Special grounding fingers form a 360-degree circle just inside the shell, acting as a shield for excellent EMI protection. The connector is actually grounded when the shells meet, even before the contacts engage.

Inserts are available in 8 shell sizes, with contact arrangements meeting MIL-DTL-1560, along with additional arrangements, to help provide flexibility in circuit configurations.

# MIL-DTL-38999 Series IV Connectors

## DEUTSCH DIV Series Connectors

## Specifications

### MATERIALS

- **Shell:** Stainless steel, aluminum
- **Plating:** Olive drab cadmium, passivated, and electroless nickel (anodized coupling ring for Class F only)
- **Insert:** Thermoplastic and fluorinated silicone elastomer
- **EMI Spring Fingers:** Nickel or cadmium-plated beryllium copper
- **O-Ring:** Fluorinated silicone elastomer

### ENVIRONMENTAL

- **Temperature Range:**
  -65°C to +175°C (Class W)
  -65°C to +200°C (Classes C, F, Y and N)
- **Fluid Resistance:** Fluid immersion per EIA 364.10, including resistance to
  MIL-PRF-5606: Hydraulic fluid
  MIL-DTL-83133: JP-8 aviation fuel
  MIL-PRF-7808: Lubricating oil
  MIL-PRF-23699: Lubricating oil
  MIL-A-8243: Deicing/defrosting fluid
  MIL-C-25769: Aircraft cleaning compound
  MIL-PRF-87937: Aircraft cleaning compound
  MIL-G-3056: Gasoline
- **Salt Spray:**
  48 hours (Nickel finishes)
  500 hours (Cadmium and passivated finishes)
- **Thermal Cycling:** -65° to 150/175/200°C (max. temperature is class dependent)

### MECHANICAL

- **Sine Vibration:** Up to 60 g for 36 hr.
- **Random Vibration:** Up to 41.7 g for 16 hr. at 175° C
  Up to 50 g for 16 hr. at ambient temperature
- **Shock:** 300 g, 3 ms in the 3 axes
- **Durability:** >500 mating cycles
- **Contact Retention:**
  Size 22D: 44 N (10 lb.)
  Size 20: 67 N (15 lb.)
  Size 16: 111 N (25 lb.)
  Size 12: 111 N (25 lb.)
  Size 10: 111 N (25 lb.)
  Size 8: 111 N (25 lb.)

### ELECTRICAL

- **Shell-to-Shell Conductivity:**
  Olive Drab Cadmium: 2.5 mV
  Passivated: 10.0 mV
  Electroless Nickel: 1.0 mV
- **Shielding Effectiveness:** >90 dB at 100 MHz, >65 dB through 10 GHz

# MIL-DTL-38999 Series IV Connectors

## DEUTSCH DIV Series Connectors

### Voltage Rating

| Service Rating | Suggested Operating Voltage | | Test Voltage at Altitude ($VAC_{rms}$) | | | |
|---|---|---|---|---|---|---|
| | $VAC_{rms}$ | VDC | Sea Level | 50,000 Ft. | 70,000 Ft. | 100,000 Ft. |
| M | 400 | 550 | 1300 | 550 | 350 | 200 |
| N | 300 | 450 | 1000 | 400 | 260 | 200 |
| I | 600 | 850 | 1800 | 600 | 400 | 200 |
| II | 750 | 1050 | 2300 | 800 | 500 | 200 |

### Hermetic Connectors

- **Hermetic Seal:** Sintered glass
- **Leakage:** ≤16 $cm^3$/hr. (0.97 $in^3$/hr.) on mated pairs connected under 2.1 bar (4.38 psi)
- **Thermal Shock:** 10 cycles, 4°C max. to 90°C min.

### Current Rating

| Contact Size | Test Current (A) | Voltage Drop (mV) |
|---|---|---|
| 22D | 5 | 73 |
| 20 | 7.5 | 55 |
| 16 | 13 | 50 |
| 12 | 23 | 42 |
| 10 | 33 | 34 |
| 8* | 46 | 26 |

*When commercial power contact replaces twin-ax contact

### Thread Sizes

| Shell Size | Accessory Thread (6g 0.100R) | Jam Nut Thread (6g 0.100R) |
|---|---|---|
| 11 | M15 x 1.0 | M20 x 1.0 |
| 13 | M18 x 1.0 | M25 x 1.0 |
| 15 | M22 x 1.0 | M28 x 1.0 |
| 17 | M25 x 1.0 | M32 x 1.0 |
| 19 | M28 x 1.0 | M35 x 1.0 |
| 21 | M31 x 1.0 | M38 x 1.0 |
| 23 | M34 x 1.0 | M41 x 1.0 |
| 25 | M37 x 1.0 | M44 x 1.0 |

# MIL-DTL-38999 Series IV Connectors

## DEUTSCH DIV Series Connectors

| Insert | | Contact Size/Quantity | | | | | | | | | | | | | |
|---|---|---|---|---|---|---|---|---|---|---|---|---|---|---|---|
| DIV Commercial | Military | 8 Twinax | 8 Coax | 8 Power | 12 Twinax | 12 Coax | 10 | 12 | 16 | 20 | 22D | QPL | QPL Hermetic | Uses 38999/62-8* Boots | Inactive: Superseded by |
| 11-02 | B2 | | | | | | | | 2 | | | ✔ | ✔ | | |
| 11-04 | B4 | | | | | | | | | 4 | | ✔ | ✔ | | |
| 11-05 | B5 | | | | | | | | | 5 | | ✔ | ✔ | | |
| 11-35 | B35 | | | | | | | | | | 13 | ✔ | ✔ | | |
| 11-98 | B98 | | | | | | | | | 6 | | ✔ | ✔ | | |
| 11-99 | B99 | | | | | | | | | 7 | | ✔ | ✔ | | |
| 13-04 | C4 | | | | | | | | 4 | | | ✔ | ✔ | | |
| 13-08 | C8 | | | | | | | | | 8 | | ✔ | ✔ | | |
| 13-35 | C35 | | | | | | | | | | 22 | ✔ | ✔ | | |
| 13-98 | C98 | | | | | | | | | 10 | | ✔ | ✔ | | |
| 15-05 | D5 | | | | | | | | 5 | | | ✔ | ✔ | | |
| 15-15 | D15 | | | | | | | | 1 | 14 | | ✔ | ✔ | | |
| 15-18 | D18 | | | | | | | | | 18 | | ✔ | ✔ | | |
| 15-19 | D19 | | | | | | | | | 19 | | ✔ | ✔ | | |
| 15-26 | D26 | | | | | | | | 2 | | 24 | | | | |
| 15-35 | D35 | | | | | | | | | | 37 | ✔ | ✔ | | |
| 15-97 | D97 | | | | | | | | 4 | 8 | | ✔ | ✔ | | |
| 17-02 | E2 | 1 | | | | | | | | | 38 | | | | 17-03 |
| 17-03 | E3 | 1 | | | | | | | | | 38 | | | ✔ | |
| 17-06 | E6 | | | | | | | 6 | | | | ✔ | ✔ | | |
| 17-08 | E8 | | | | | | | | 8 | | | ✔ | ✔ | | |
| 17-11 | E11 | | | | 2 | 1 | | | | 8 | | | | | |
| 17-19 | E19 | | | | | | | | 4 | 11 | 4 | | | | |
| 17-20 | E20 | | | | | | | 4 | | | 16 | | | | |
| 17-22 | E22 | 2 | | | | | | 2 | | | | | | | |
| 17-24 | E24 | | | 2 | | | | | | | 22 | | | | |
| 17-26 | E26 | | | | | | | | | 26 | | ✔ | | | |
| 17-35 | E35 | | | | | | | | | | 55 | ✔ | ✔ | | |
| 17-99 | E99 | | | | | | | | 2 | 21 | | ✔ | ✔ | | |
| 19-11 | F11 | | | | | | | | 11 | | | ✔ | ✔ | | |
| 19-18 | F18 | 4 | | | | | | | | | 14 | ✔ | | | 19-19 |
| 19-19 | F19 | 4 | | | | | | | | | 14 | ✔ | | ✔ | |
| 19-28 | F28 | | | | | | | | 2 | 26 | | | ✔ | | |
| 19-32 | F32 | | | | | | | | | 32 | | ✔ | | | |
| 19-35 | F35 | | | | | | | | | | 66 | ✔ | ✔ | | |

Blue shaded entries are not Mil Spec.

# MIL-DTL-38999 Series IV Connectors

## DEUTSCH DIV Series Connectors

| Insert | | Contact Size/Quantity | | | | | | | | | | | | | |
|---|---|---|---|---|---|---|---|---|---|---|---|---|---|---|---|
| DIV Commercial | Military | 8 Twinax | 8 Coax | 8 Power | 12 Twinax | 12 Coax | 10 | 12 | 16 | 20 | 22D | QPL | QPL Hermetic | Uses 38999/62-8* Boots | Inactive: Superseded by |
| 21-11 | G11 | | | | | | | 11 | | | | ✔ | ✔ | | |
| 21-16 | G16 | | | | | | | | 16 | | | ✔ | ✔ | | |
| 21-20 | G20 | 2 | | | | | | | | 18 | | | | | |
| 21-35 | G35 | | | | | | | | | | 79 | ✔ | ✔ | | |
| 21-39 | G39 | | | | | | | | 2 | 37 | | ✔ | ✔ | | |
| 21-41 | G41 | | | | | | | | | 41 | | ✔ | ✔ | | |
| 21-48 | G48 | | | 4 | | | | | | | | | | | |
| 21-75 | G75 | 4 | | | | | | | | | | | | | 21-76 |
| 21-76 | G76 | 4 | | | | | | | | | | | | ✔ | |
| 23-06 | H6 | 6 | | | | | | | | | | | | | |
| 23-21 | H21 | | | | | | | | 21 | | | ✔ | ✔ | | |
| 23-35 | H35 | | | | | | | | | | 100 | ✔ | ✔ | | |
| 23-53 | H53 | | | | | | | | | 53 | | ✔ | ✔ | | |
| 23-54 | H54 | | | | | | | 4 | 9 | | 40 | | | | |
| 23-55 | H55 | | | | | | | | | 55 | | ✔ | ✔ | | |
| 23-63 | H63 | | | | | | | 4 | 4 | | 49 | | | | |
| 25-04 | J4 | | | | | | | | 8 | 48 | | ✔ | ✔ | | |
| 25-07 | J7 | 2 | | | | | | | | | 97 | | | | 25-09 |
| 25-08 | J8 | 8 | | | | | | | | | | | | | 25-10 |
| 25-09 | J9 | 2 | | | | | | | | | 97 | | | ✔ | |
| 25-10 | J10 | 8 | | | | | | | | | | | | ✔ | |
| 25-17 | J17 | 6 | | | | | | | | | 36 | | | | |
| 25-19 | J19 | | | | | | | 19 | | | | ✔ | ✔ | | |
| 25-20 | J20 | 3 | | | | 4 | | | 13 | 10 | | | | | 25-21 |
| 25-21 | J21 | 3 | | | | 4 | | | 13 | 10 | | | | ✔ | |
| 25-24 | J24 | | | | | | | 12 | 12 | | | ✔ | ✔ | | |
| 25-29 | J29 | | | | | | | | 29 | | | ✔ | ✔ | | |
| 25-35 | J35 | | | | | | | | | | 128 | ✔ | ✔ | | |
| 25-37 | J37 | | | | | | | | 37 | | | ✔ | | | |
| 25-43 | J43 | | | | | | | | 20 | 23 | | | ✔ | | |
| 25-46 | J46 | | 2 | | | | | | 4 | 40 | | | | | 25-47 |
| 25-47 | J47 | | 2 | | | | | | 4 | 40 | | | | ✔ | |
| 25-61 | J61 | | | | | | | | | 61 | | ✔ | ✔ | | |
| 25-90 | J90 | 2 | | | | | | | 4 | 40 | | | | | 25-91 |
| 25-91 | J91 | 2 | | | | | | | 4 | 40 | | | | ✔ | |

Blue shaded entries are not Mil Spec.

# MIL-DTL-38999 Series IV Connectors

## DEUTSCH DIV Series Connectors

### Part Numbering
### MIL-DTL-38999 and DEUTSCH Commercial Versions

| | | | | | | | | | | | | |
|---|---|---|---|---|---|---|---|---|---|---|---|---|
| **Military** | D38999/ | 40 | W | J | | 35 | P | N | - | L/C |
| **Commercial** | DIV | 40 | E | 25 | - | 35 | P | N | - | 6139 |

| Commercial | Military | |
|---|---|---|
| **PREFIX** | | |
| **SHELL STYLE/MIL SLASH SHEET** | | |
| **40** | **40** | Wall Mount Receptacle |
| **43** | **42** | Box Mount Receptacle |
| **44** | **44** | Jam Nut Receptacle |
| **46** | **46** | Straight Plug with EMI Fingers |
| **47** | **47** | Straight Plug without EMI Fingers |
| **48** | **48** | In-Line Receptacle |
| **Hermetic Connectors** | | |
| **41** | **45** | Hermetic Solder Mount Receptacle |
| **44** | **43** | Hermetic Jam Nut Receptacle |
| **CLASS/FINISH** | | |
| **E** | **F** | Electroless Nickel, Black Anodized Coupling Ring |
| **F** | **(Not Avail.)** | Electroless Nickel, Green Anodized Coupling Ring |
| **G** | **G** | Space Grade, Electroless Nickel |
| **E (023)** | **W** | Olive Drab Cadmium over Nickel |
| **Hermetic Connectors** | | |
| **H** | **H** | Stainless Steel, Passivated, Space Grade |
| **N** | **N** | Stainless Steel, Nickel Plated |
| **Y** | **Y** | Stainless Steel, Passivated |
| **SHELL SIZE** | | |
| **11 (B), 13 (C), 15 (D), 17 (E), 19 (F), 21 (G), 23 (H), 25 (J)** | | Numbers = DIV Commercial<br>(Letters) = Military |
| **INSERT ARRANGEMENT** | | See Insert Arrangement Tables, pages 10-17 and 47-48 |
| **CONTACTS** | | |
| **P** 500-Cycle Pin | | **S** 500-Cycle Socket |
| **H** 1500-Cycle Pin | | **J** 1500-Cycle Socket |
| **A** Less Pin (with intent to use nonstandard contacts) | | |
| **B** Less Socket (with intent to use nonstandard contacts) | | |
| **Hermetic Contacts** | | |
| **P** Pin, Solder Cup | | **S** Socket, Solder Cup |
| **X** Pin, Eyelet | | **Z** Socket, Eyelet |
| **C** Pin, PC Tail | | **D** Socket, PC Tail |
| **POLARIZING POSITIONS** | | |
| **N** Normal | | |
| **A, B, C, D, K** | | |
| **MODIFICATIONS** | | |
| **023*** | | Use to Get Military Class W with Contacts |
| **6149*** | | Use for Mil Class F Less Contacts |
| **6139*** | | Use for Mil Class W Less Contacts |
| **L/C**** | | Less Contacts |

*Use with Commercial DIV callout only
**Use with Military D38999 callout only

# MIL-DTL-38999 Series IV Connectors

## DEUTSCH DIV Series Connectors

### Wall Mount/Square Flange Receptacle

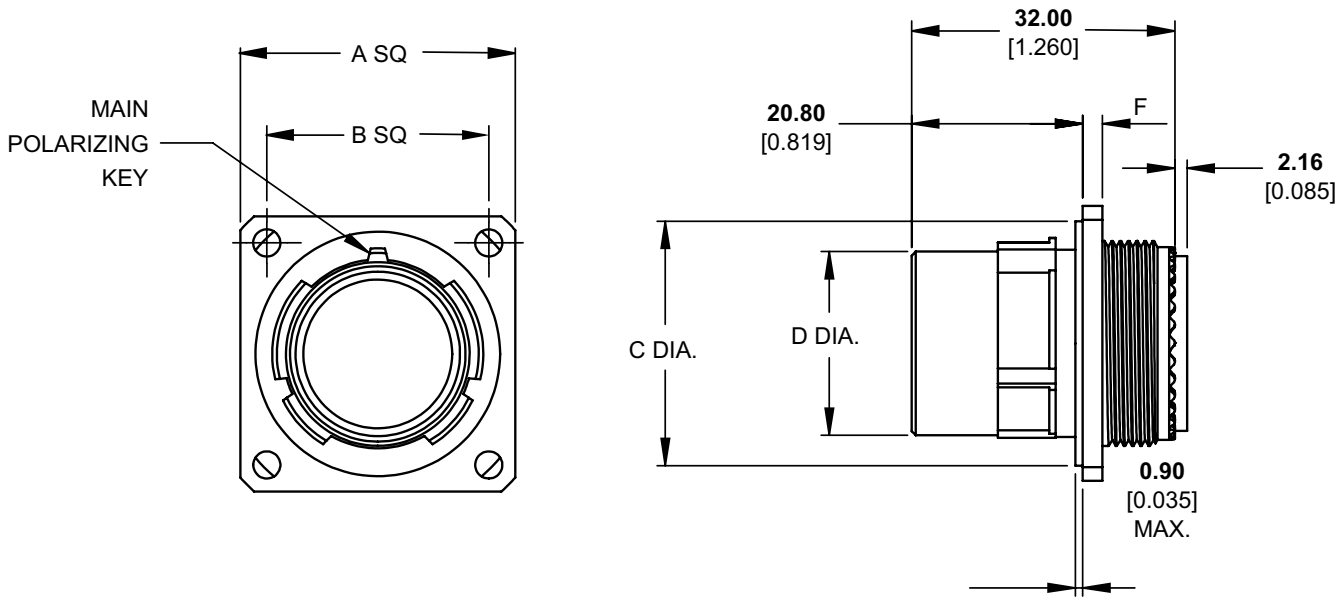


| Shell Size | A Sq. Max. | B Sq. | ØC Max. | ØD Max. | F |
|---|---|---|---|---|---|
| 11 | **26.70**<br>1.051 | **20.62**<br>0.812 | **20.15**<br>0.793 | **12.93**<br>0.509 | **2.60**<br>0.102 |
| 13 | **29.10**<br>1.146 | **23.02**<br>0.906 | **23.35**<br>0.919 | **16.10**<br>0.634 | **2.60**<br>0.102 |
| 15 | **31.50**<br>1.240 | **24.62**<br>0.970 | **26.52**<br>1.044 | **19.28**<br>0.759 | **2.60**<br>0.102 |
| 17 | **33.90**<br>1.335 | **26.98**<br>1.062 | **29.72**<br>1.170 | **22.48**<br>0.885 | **2.60**<br>0.102 |
| 19 | **37.10**<br>1.461 | **29.36**<br>1.156 | **32.87**<br>1.294 | **25.63**<br>1.009 | **2.60**<br>0.102 |
| 21 | **40.20**<br>1.583 | **31.76**<br>1.250 | **36.05**<br>1.419 | **28.80**<br>1.134 | **3.40**<br>0.133 |
| 23 | **43.40**<br>1.709 | **34.92**<br>1.374 | **39.22**<br>1.544 | **31.98**<br>1.259 | **3.40**<br>0.133 |
| 25 | **46.60**<br>1.835 | **38.10**<br>1.500 | **42.40**<br>1.669 | **35.15**<br>1.384 | **3.40**<br>0.133 |

**Millimeters** Inches

# MIL-DTL-38999 Series IV Connectors

## DEUTSCH DIV Series Connectors

### Jam Nut Receptacle

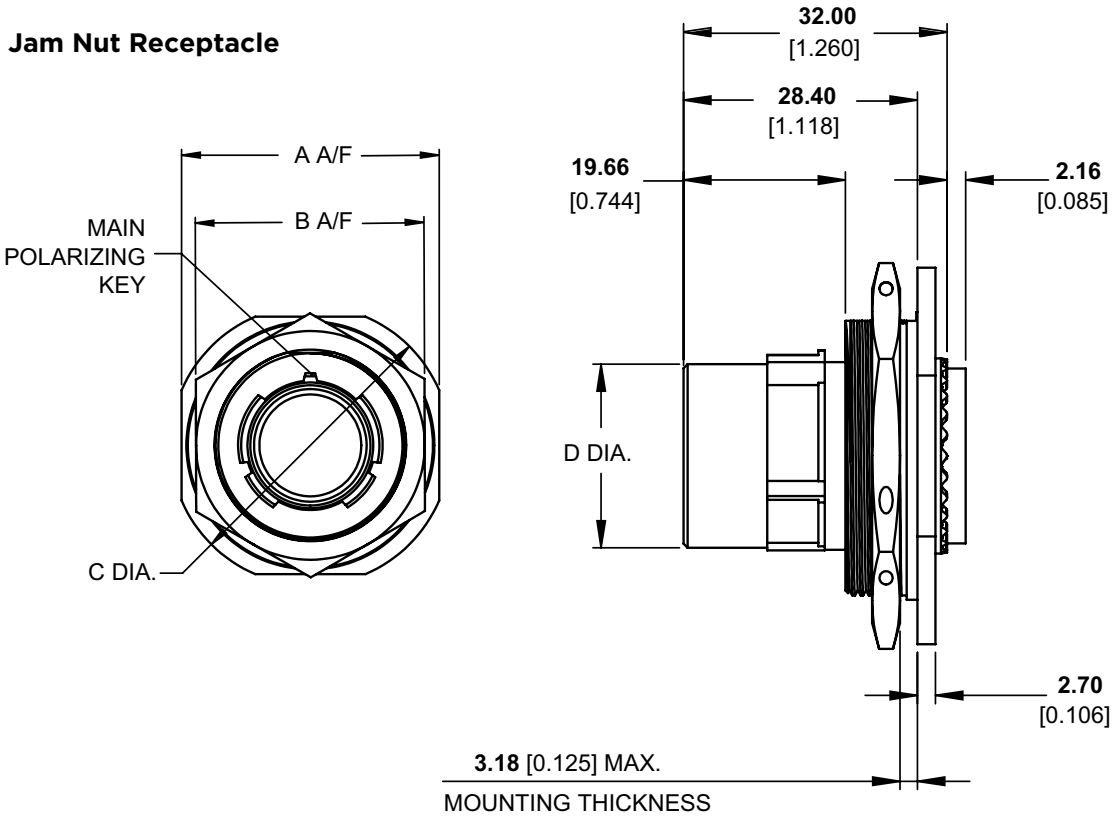


| Shell Size | A A/F Max. | B A/F Max. | C Dia. Max. | D Dia. Max. |
|---|---|---|---|---|
| 11 | **35.40**<br>1.394 | **32.00**<br>1.260 | **38.60**<br>1.520 | **12.93**<br>0.509 |
| 13 | **38.60**<br>1.520 | **36.00**<br>1.417 | **41.70**<br>1.642 | **16.10**<br>0.634 |
| 15 | **41.70**<br>1.642 | **41.00**<br>1.614 | **44.90**<br>1.768 | **19.28**<br>0.759 |
| 17 | **45.70**<br>1.799 | **41.00**<br>1.614 | **49.70**<br>1.957 | **22.48**<br>0.885 |
| 19 | **48.50**<br>1.909 | **46.00**<br>1.811 | **51.70**<br>2.035 | **25.63**<br>1.009 |
| 21 | **51.70**<br>2.035 | **50.00**<br>1.968 | **54.80**<br>2.157 | **28.80**<br>1.134 |
| 23 | **54.80**<br>2.157 | **50.00**<br>1.968 | **58.00**<br>2.283 | **31.98**<br>1.259 |
| 25 | **58.00**<br>2.283 | **55.00**<br>2.165 | **61.20**<br>2.409 | **35.15**<br>1.384 |

**Millimeters** Inches

# MIL-DTL-38999 Series IV Connectors

## DEUTSCH DIV Series Connectors

### Box Mount Receptacle

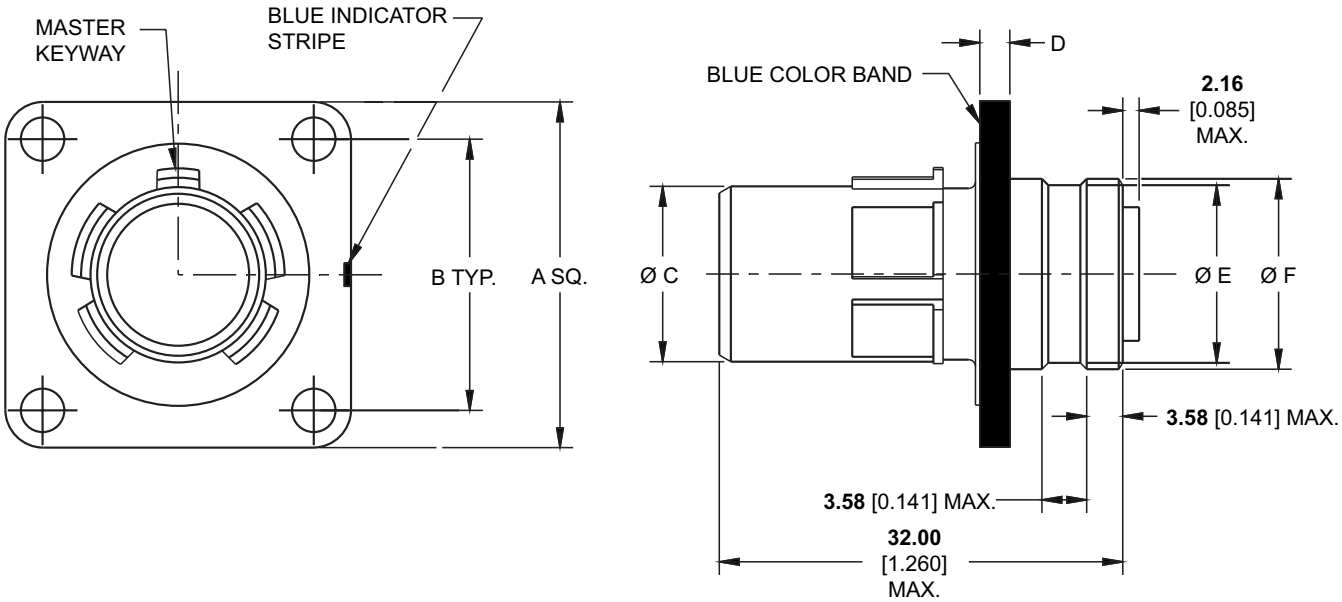


| Shell Size | A Sq. Max. | B Sq. | ØC Max. | D | ØE | ØF |
|---|---|---|---|---|---|---|
| 11 | **26.70**<br>1.051 | **20.62**<br>0.812 | **20.15**<br>0.793 | **2.60**<br>0.102 | **13.41**<br>0.528 | **14.50**<br>0.571 |
| 13 | **29.10**<br>1.146 | **23.02**<br>0.906 | **23.35**<br>0.919 | **2.60**<br>0.102 | **16.31**<br>0.642 | **17.40**<br>0.685 |
| 15 | **31.50**<br>1.240 | **24.62**<br>0.970 | **26.52**<br>1.044 | **2.60**<br>0.102 | **19.41**<br>0.764 | **20.60**<br>0.811 |
| 17 | **33.90**<br>1.335 | **26.98**<br>1.062 | **29.72**<br>1.170 | **2.60**<br>0.102 | **22.61**<br>0.890 | **23.80**<br>0.937 |
| 19 | **37.10**<br>1.461 | **29.36**<br>1.156 | **32.87**<br>1.294 | **2.60**<br>0.102 | **25.30**<br>0.996 | **26.52**<br>1.044 |
| 21 | **40.20**<br>1.583 | **31.76**<br>1.250 | **36.05**<br>1.419 | **3.40**<br>0.133 | **28.52**<br>1.123 | **29.620**<br>1.166 |
| 23 | **43.40**<br>1.709 | **34.92**<br>1.374 | **39.22**<br>1.544 | **3.40**<br>0.133 | **31.70**<br>1.248 | **32.82**<br>1.292 |
| 25 | **46.60**<br>1.835 | **38.10**<br>1.500 | **42.40**<br>1.669 | **3.40**<br>0.133 | **34.82**<br>1.371 | **36.02**<br>1.418 |

**Millimeters** Inches

# MIL-DTL-38999 Series IV Connectors

## DEUTSCH DIV Series Connectors

### Plug

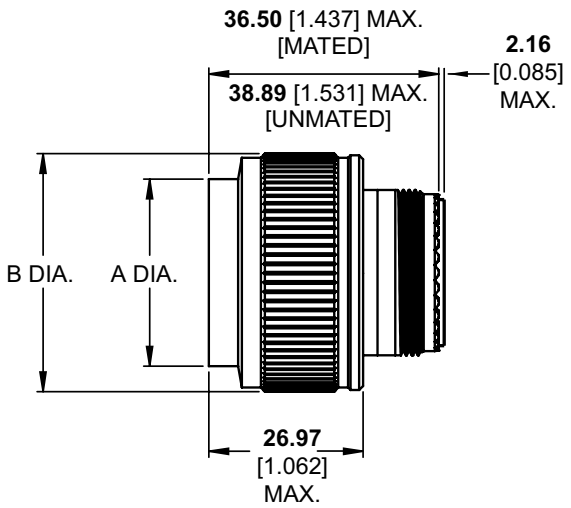


| Shell Size | Ø A Max. | Ø B Max. |
|---|---|---|
| **11** | **26.60**<br>1.047 | **19.70**<br>0.775 |
| **13** | **31.00**<br>1.220 | **22.90**<br>0.901 |
| **15** | **34.20**<br>1.346 | **26.40**<br>1.039 |
| **17** | **37.40**<br>1.472 | **29.20**<br>1.149 |
| **19** | **40.20**<br>1.583 | **32.40**<br>1.275 |
| **21** | **43.30**<br>1.704 | **35.60**<br>1.401 |
| **23** | **46.50**<br>1.831 | **38.80**<br>1.527 |
| **25** | **49.70**<br>1.957 | **41.90**<br>1.649 |

**Millimeters** Inches

# MIL-DTL-38999 Series IV Connectors

## DEUTSCH DIV Series Connectors

### Recommended Panel Cutouts

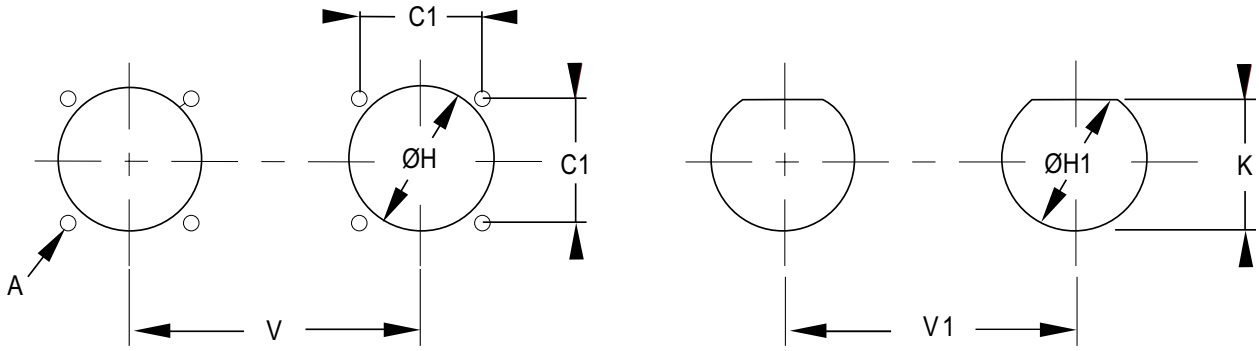


Square Flange Receptacle

Jam Nut Receptacle

| Shell Size | C1 | H Min. | | H1 Max. | K Max. | V Min. | V1 Min. |
|---|---|---|---|---|---|---|---|
| | | Front | Rear | | | | |
| **11** | **20.62**<br>0.812 | **15.08**<br>0.594 | **22.22**<br>0.875 | **20.88**<br>0.822 | **19.53**<br>0.769 | **27.00**<br>1.063 | **32.60**<br>1.283 |
| **13** | **23.01**<br>0.906 | **19.05**<br>0.750 | **23.42**<br>0.922 | **25.58**<br>1.007 | **24.26**<br>0.995 | **30.20**<br>1.189 | **36.00**<br>1.417 |
| **15** | **24.61**<br>0.969 | **23.01**<br>0.906 | **26.59**<br>1.047 | **28.80**<br>1.134 | **27.53**<br>1.084 | **33.30**<br>1.331 | **39.60**<br>1.559 |
| **17** | **26.97**<br>1.062 | **25.81**<br>1.106 | **30.96**<br>1.219 | **31.98**<br>1.259 | **30.68**<br>1.208 | **36.50**<br>1.437 | **43.30**<br>1.705 |
| **19** | **29.36**<br>1.156 | **28.98**<br>1.141 | **32.94**<br>1.297 | **35.15**<br>1.384 | **33.86**<br>1.333 | **39.30**<br>1.547 | **47.00**<br>1.850 |
| **21** | **31.75**<br>1.250 | **32.16**<br>1.266 | **36.12**<br>1.422 | **38.28**<br>1.507 | **37.06**<br>1.459 | **42.50**<br>1.673 | **50.60**<br>1.992 |
| **23** | **34.93**<br>1.375 | **34.93**<br>1.375 | **39.29**<br>1.547 | **41.50**<br>1.634 | **40.01**<br>1.575 | **45.70**<br>1.799 | **54.20**<br>2.134 |
| **25** | **38.10**<br>1.500 | **37.69**<br>1.484 | **42.47**<br>1.672 | **44.68**<br>1.759 | **43.41**<br>1.709 | **48.80**<br>1.921 | **59.70**<br>2.350 |

**Millimeters** Inches

# MIL-DTL-38999 Series IV Connectors

## DEUTSCH DIV Series Connectors

### Keying Options

(Viewed from Mating Face of the Receptacle Connector)

| Clocking | X° Ref. | Y° Ref. |
|---|---|---|
| N | 110 | 250 |
| A | 100 | 260 |
| B | 90 | 270 |
| C | 80 | 280 |
| D | 70 | 290 |
| K | 120 | 255 |

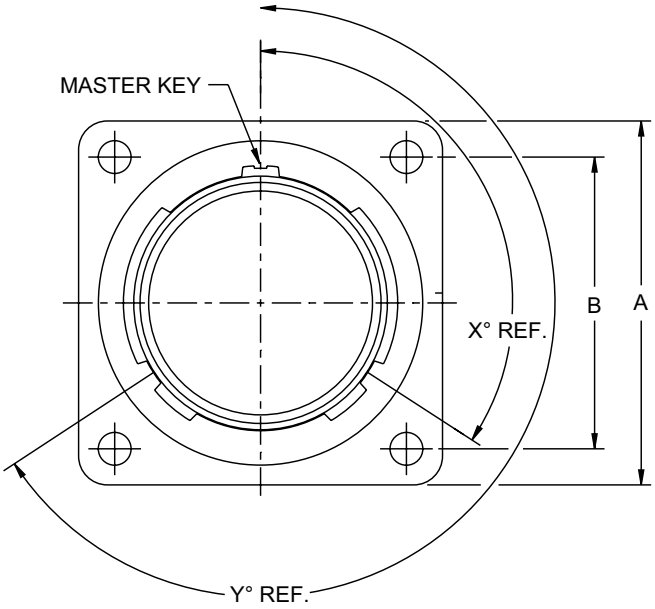

## Panel Seals

Panel seals help improve the sealing between the structure and connector shell.

- **Color:** Tan
- **Elastomer:** Fluorosilicone
- **Temperature Range:** -40°C to +93°C

**RUGGED**

- RoHS

**APPLICATIONS**

- DataCom
- Military
- Medical

| Front Flange Mounting | | | | | | | | Rear Flange Mounting | | |
|---|---|---|---|---|---|---|---|---|---|---|
| **Size** | **Part Number** | **H max.** | **B max.** | **C ± 0.1** | **E max.** | **E1 max.** | **T max.** | **H max.** | **Part Number** | **Size** |
| 09 | 108-0003-10 | 15.40 | 24.30 | 18.30 | 3.00 | 5.92 | 3.30 | 14.10 | 108-0004-10 | 09 |
| 11 | 108-0001-12 | 19.20 | 26.40 | 20.60 | 3.00 | 5.92 | 3.30 | 17.20 | 108-0004-12 | 11 |
| 13 | 108-0001-14 | 22.70 | 29.10 | 23.00 | 3.00 | 5.92 | 3.30 | 20.40 | 108-0004-14 | 13 |
| 15 | 108-0001-16 | 25.90 | 31.30 | 24.60 | 3.00 | 5.92 | 3.30 | 23.60 | 108-0004-16 | 15 |
| 17 | 108-0003-18 | 29.10 | 33.70 | 27.00 | 3.00 | 5.92 | 3.30 | 26.80 | 108-0004-18 | 17 |
| 19 | 108-0003-20 | 32.30 | 36.90 | 29.40 | 3.00 | 5.92 | 3.30 | 30.60 | 108-0001-20 | 19 |
| 21 | 108-0003-22 | 35.40 | 40.10 | 31.75 | 3.00 | 5.16 | 3.30 | 33.50 | 108-0001-22 | 21 |
| 23 | 108-0003-24 | 38.60 | 43.30 | 34.90 | 3.00 | 5.16 | 4.30 | 36.30 | 108-0004-24 | 23 |
| 25 | 108-0001-25 | 41.40 | 46.00 | 38.10 | 3.00 | 4.87 | 4.30 | 39.00 | 108-0012-25 | 25 |

### For Square Flange Receptacle
**Sealed Version**

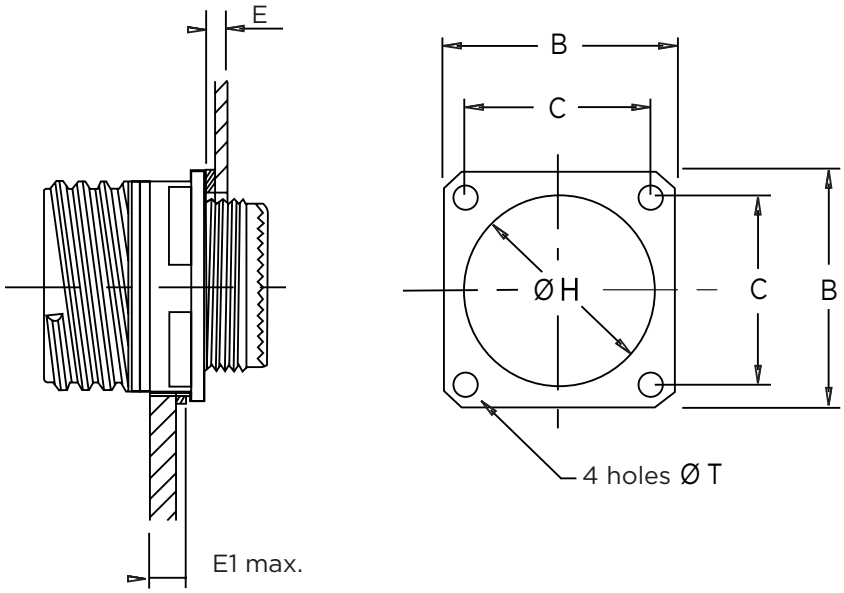

## Conductive Panel Seals

In addition to improving sealing, conductive panel seals also improve conductivity and reduce resistivity for EMI improvement between the connector shell and the panel of the structure/system.

- **Color:** Tan
- **Elastomer:** Fluorosilicone
- **Filler:** Silver aluminum
- **Hardness:** 70 ± 7 Shore A
- **Volume Resistivity:** 0.010 ohm-cm, maximum
- **Density:** 2.0 ± 0.25 g/cm$^3$
- **Tensile Strength:** 200 psi, minimum
- **Elongation:** 60%–260%
- **100%–300%:** 35 ppi, minimum
- **Temperature Range:** -55°C to +160°C

### RUGGED

- Material achieves the performances of MIL-DTL-83528 Type D
- Extended temperature range
  - Improves standard environmental resistance
- Provides strong EMI protection
- RoHS

### APPLICATIONS

- DataCom
- Military
- Medical

| Square Flange Receptacle Shell Size | Conductive (Front) Panel Seal Refs |
|---|---|
| **9 / A** | PC-CO**161**FAB0032-126 SIZE 09-SAFS |
| **11 / B** | PC-CO**162**FAB0032-126 SIZE 11-SAFS |
| **13 / C** | PC-CO**138**FAB0032-126 SIZE 13-SAFS |
| **15 / D** | PC-CO**163**FAB0032-126 SIZE 15-SAFS |
| **17 / E** | PC-CO**164**FAB0032-126 SIZE 17-SAFS |
| **19 / F** | PC-CO**165**FAB0032-126 SIZE 19-SAFS |
| **21 / G** | PC-CO**136**FAB0032-126 SIZE 21-SAFS |
| **23 / H** | PC-CO**137**FAB0032-126 SIZE 23-SAFS |
| **25 / J** | PC-CO**166**FAB0032-126 SIZE 25-SAFS |

### GASKET 09
**D38999/20 Series III (Shell Size 09)**

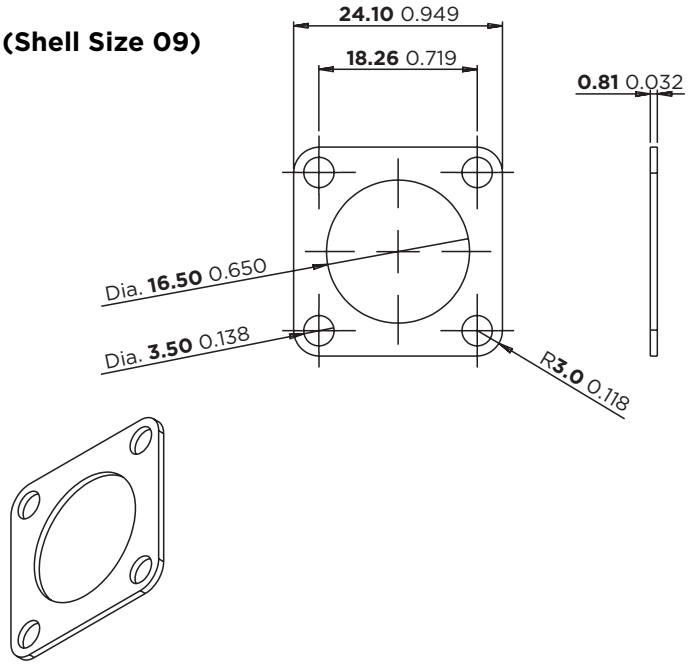


**Millimeters** Inches

# Conductive Panel Seals

## GASKET 11
### D38999/20 Series III (Shell Size 11)

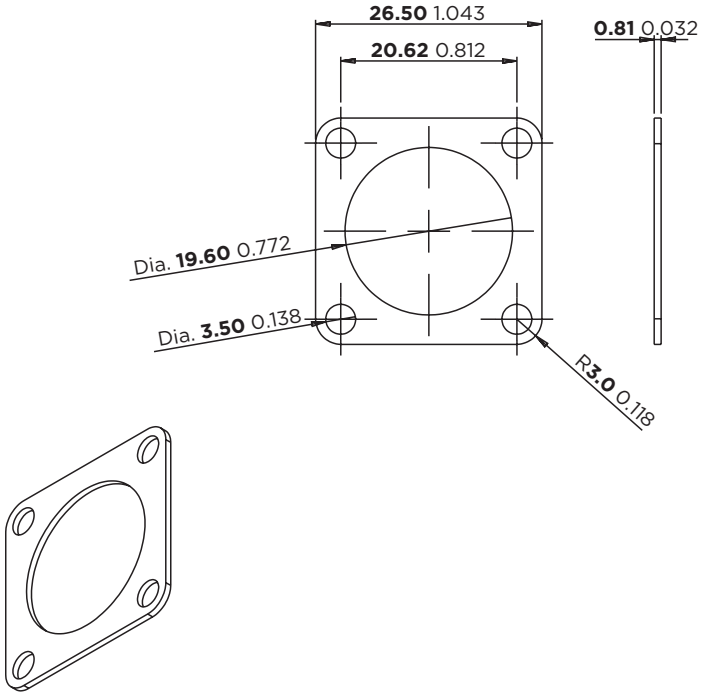


**Millimeters** Inches

## GASKET 13
### D38999/20 Series III (Shell Size 13)

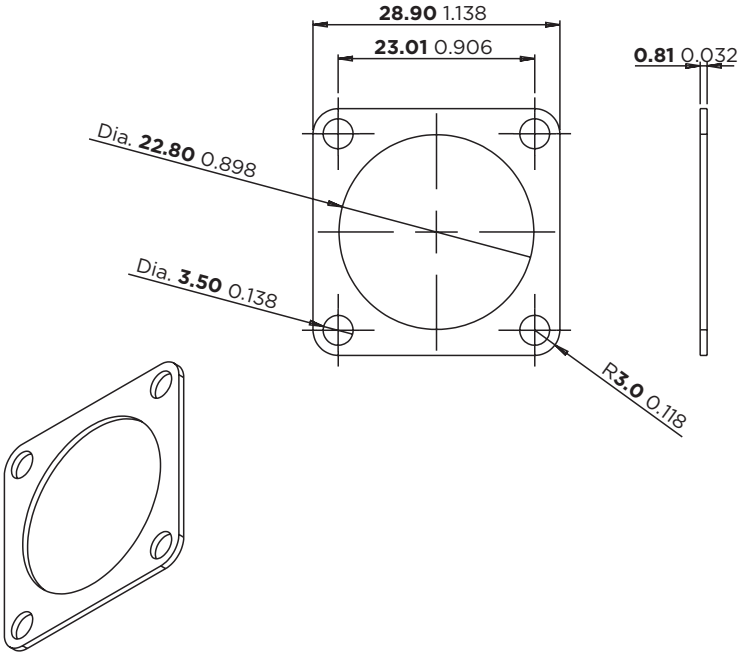


**Millimeters** Inches

# Conductive Panel Seals

## GASKET 15
### D38999/20 Series III (Shell Size 15)

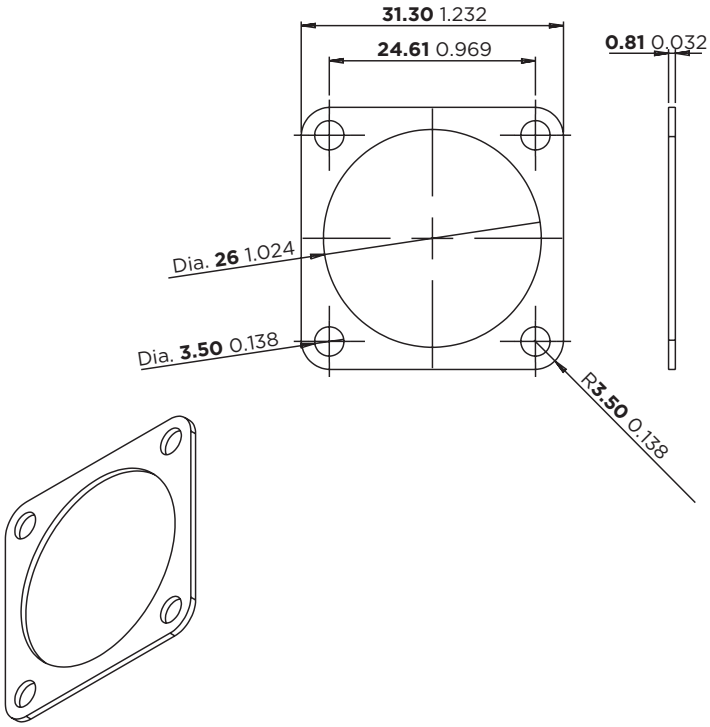


**Millimeters** Inches

## GASKET 17
### D38999/20 Series III (Shell Size 17)

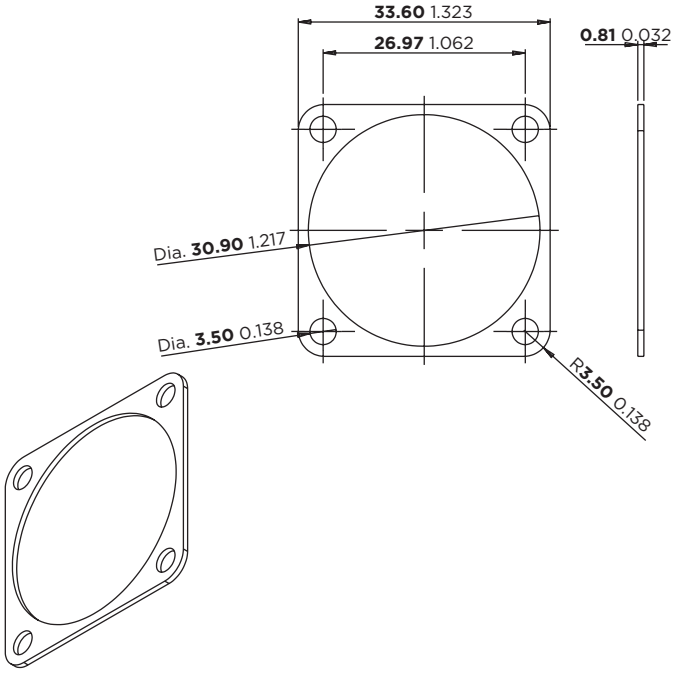


**Millimeters** Inches

# Conductive Panel Seals

## GASKET 19
### D38999/20 Series III (Shell Size 19)

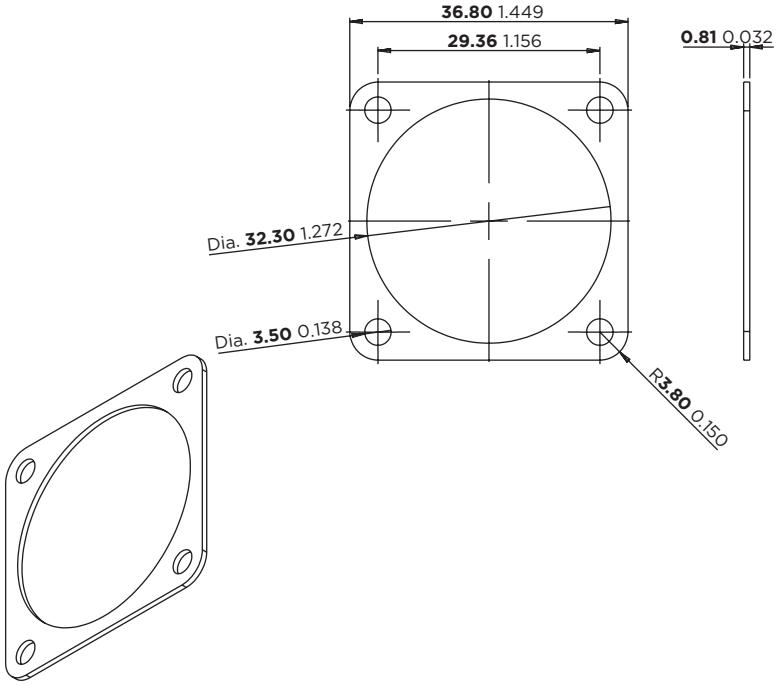


**Millimeters** Inches

## GASKET 21
### D38999/20 Series III (Shell Size 21)

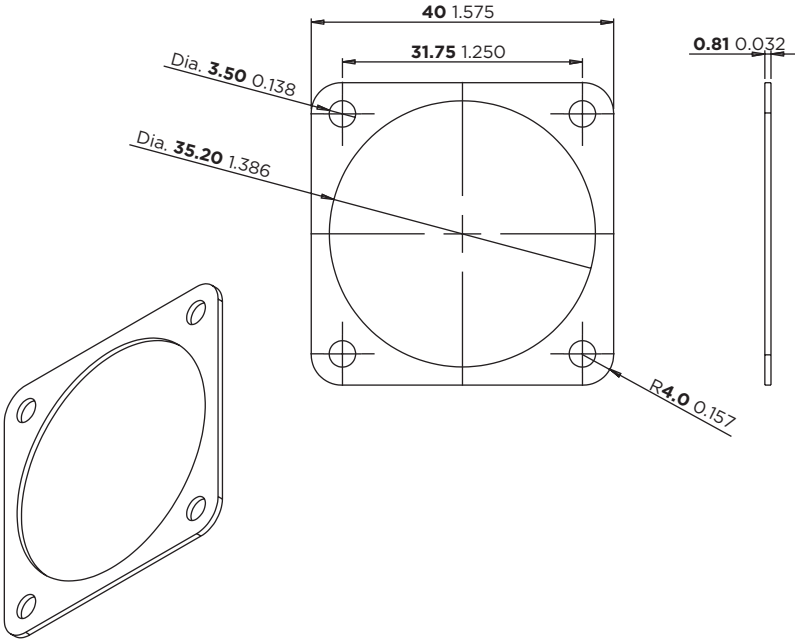


**Millimeters** Inches

# Conductive Panel Seals

## GASKET 23
### D38999/20 Series III (Shell Size 23)

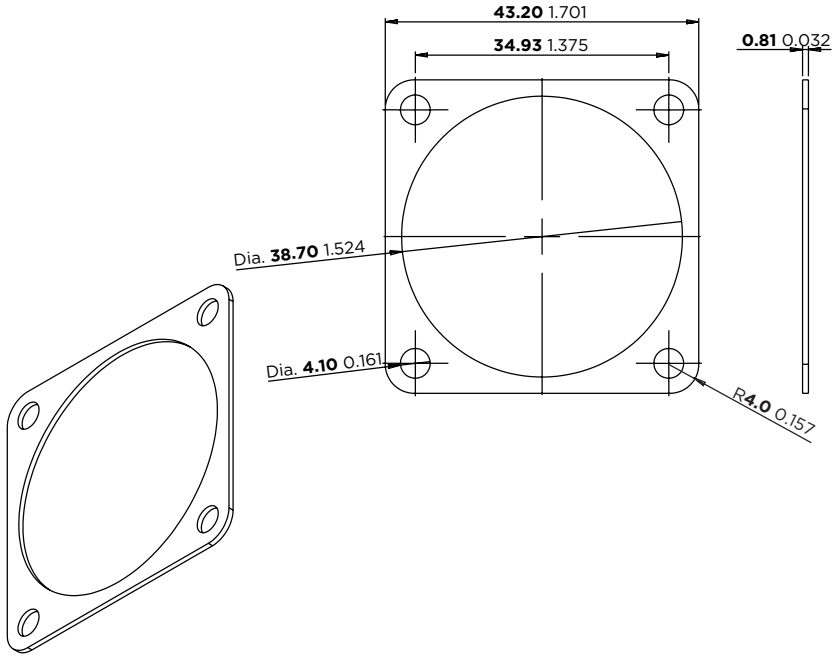


**Millimeters** Inches

## GASKET 25
### D38999/20 Series III (Shell Size 25)

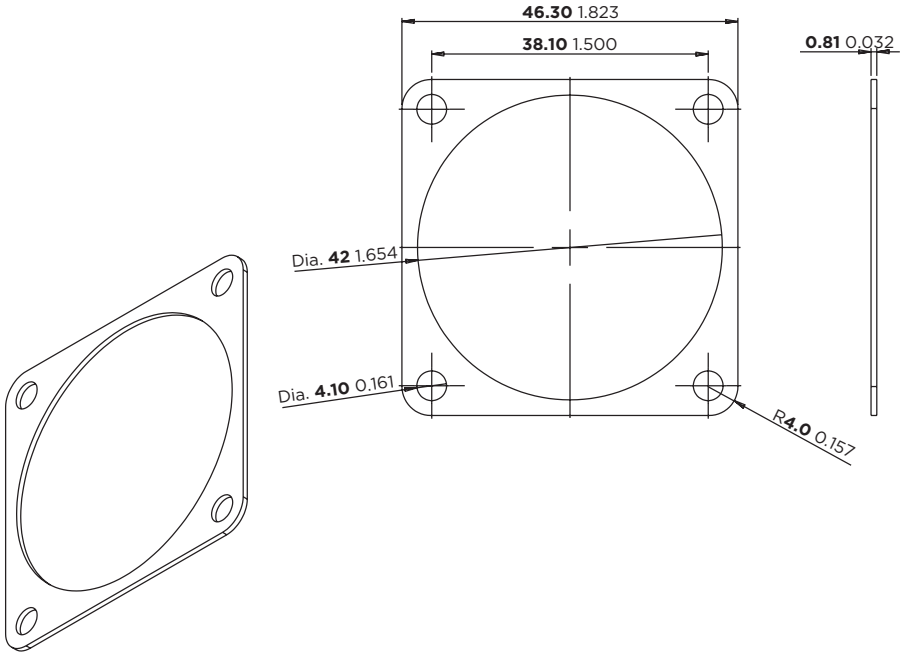


**Millimeters** Inches

**EXTREME TEMPERATURE**

- -65°C to +200°C

**AIRTIGHT/VACUUM**

- <1x10$^{-7}$ cm$^3$/s @ 14.7 psi

**ENVIRONMENTAL CONDITIONS**

- Fluid resistance
- Corrosion resistance
- High vibration

**APPLICATIONS**

- Sensors
- Fuel tank systems
- Down-hole drilling equipment
- Electronic equipment
- Engine accessories
- Pyrotechnic equipment
- Vacuum chambers
- Optical devices
- Missiles
- Avionics
- Sealed environments

# MIL-DTL-38999 Hermetic Connectors

Since the early 1960s TE Connectivity has been producing DEUTSCH hermetically sealed glass-to-metal connectors for applications where temperature, pressure, and environmental considerations render standard connectors unusable. Hermetic connectors are used to separate an inert atmosphere or vacuum on one side from wide-ranging high-pressure, high temperature, or corrosive conditions on the other. They are also used to maintain a pressure differential between the two sections. In short, DEUTSCH hermetic connectors are designed to help provide a continuously gas-tight seal while withstanding:

- High pressures
- Extreme temperatures
- High vibration

Hermetic connectors are also an excellent choice when you are not exactly sure of the conditions that will affect your connector's performance. Hermetic connectors may meet many of the most rigid environmental and electrical specifications, which is important when dealing with variables that are unknown.

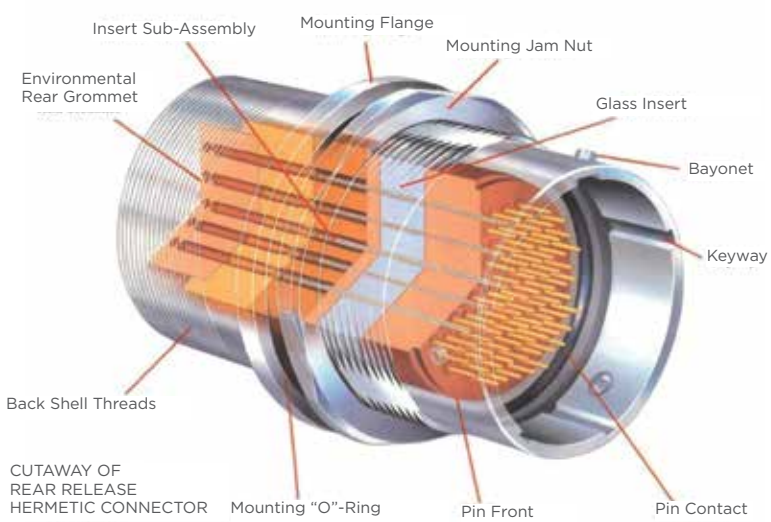


## Glass-to-Metal Sealing

Standard sealing techniques—such as epoxy potting—are useful in many applications, but they may not provide the degree of sealing that is offered by glass-to-metal hermetic seals. This is especially true of applications with high pressure differentials. Glass is a durable, high-strength material that resists extreme changes in temperature or pressure.

Our glass-to-metal seals create a bond between shell, insulator, and contacts by fusing the glass insulator to the metal components. The bond can maintain a helium leak rate of .01 micron ft$^3$/h at 14.7 psi. The hermetic bond helps provide enduring reliability, resists cracking that would compromise the performance, and helps withstand a wide range of harsh conditions.

# MIL-DTL-38999 Hermetic Connectors

### Compression vs. Matched Seals

DEUTSCH hermetic connectors are produced using both compression seals and matched seals. In a matched seal, the metal and glass have similar coefficients of thermal expansion (CTE). This reduces stress on the glass from thermal expansion and contraction.

In a compression seal, the metal has a higher CTE than the glass. During the firing process the metal expands more than the glass. As the glass and metal then cool, the metal contracts back onto the glass to form an extremely robust bond. Compression seals are used for high-pressure applications.

## Controlling Quality from Start to Finish

We design and manufacture all the components in our hermetic connectors. Our shells are made with high-grade materials—from stainless steel bar stock to exotic metals like titanium. We use high-grade silica and binders for the glass and the elastomer materials are carefully matched to the required connector application. When fused with the contacts and the shell, the inserts produce a true hermetic seal. Pin or socket contacts are available with solder pot, eyelet, and extended pin terminations. Our contacts can be made from a variety of materials like nickel iron, Alumel, Chromel, and copper-cored nickel iron. An important consideration in material selection is the ability to withstand the high temperatures of the sealing process. All connectors are fully leak tested by TE to help ensure the integrity of the hermetic seal.

### Materials

Standard materials for hermetic connectors include:

- **Shell:** Stainless steel
- **Insert:** Glass
- **Contacts:** Nickel iron (52 Alloy)

Other materials are used, depending on special requirements for:

- High current
- High voltages
- High pressures
- Extreme temperatures
- Severe corrosion conditions

### Weight-Saving Aluminum Hermetic Connectors

DEUTSCH aluminum hermetic connectors use an aluminum alloy shell to create connectors that are 60% lighter than stainless steel counterparts—two aluminum connectors weigh less than a single stainless steel equivalent.

- Up to 60% lighter
- Higher conductivity: up to 250 A
- Lower contact resistance: less than half that of nickel-iron contacts
- Wide temperature range: -85°C to +300°C

## A Full Range of Hermetic Choices

DEUTSCH hermetic connectors are available in a variety of military and commercial styles. Options include a choice of:

**Pin or socket contacts:** Available with solder pot, eyelet, and extended pin terminations

**Rear-release crimp termination** to help reduce costs by eliminating soldering processes and potting and by allowing use of standard crimp tools

**Feedthroughs** provide a single device that can be terminated on both sides

**Hermetic assemblies** with connectors pre-installed in a mounting fixture to reduce your manufacturing time and speed installation

**Custom connectors and configurations** for applications not easily accommodated by standard offerings. Hermetic connectors lend themselves well to short production runs.

## MIL-DTL-38999 Hermetic Connectors

| | Military Part No. | DEUTSCH Part No. | Mount Type | Mil Class | Contact Styles |
|---|---|---|---|---|---|
| **Series I** Scoop-proof bayonet coupling | MS27469 | DJT10 | Wall | H: Space grade<br>Y: Electro-polished stainless steel | **Pins:**<br>**P =** Solder cup<br>**X =** Eyelet<br>**C =** Feedthrough<br><br>**Socket:**<br>**S =** Solder cup<br>**Z =** Eyelet<br>**D =** Feedthrough |
| | MS27470 | DJT14 | Jam Nut | | |
| | MS27471 | DJT11 | Solder | | |
| **Series II** Non-scoop-proof, bayonet coupling, low silhouette | MS27475 | DJL18 | Wall | H: Space grade<br>Y: Electro-polished stainless steel | |
| | MS27476 | DJL10 | Box | | |
| | MS27477 | DJL14 | Jam Nut | | |
| | MS27478 | DJL11 | Solder | | |
| **Series III** Scoop-proof, triple start, self-locking, threaded coupling | D38999/21 | DTS20 | Box | H: Space grade<br>N: Nickel plate over stainless steel<br>Y: Electro-polished stainless steel | |
| | D38999/23 | DTS24 | Jam Nut | | |
| | D38999/25 | DTS21 | Solder | | |
| | D38999/27 | DTS23 | Weld | | |
| **Series IV** Scoop-proof, breech coupling | D38999/41 | DIV40 | Box | H: Space Grade<br>N: Nickel plate over stainless steel<br>Y: Electro-polished stainless steel | |
| | D38999/43 | DIV44 | Jam Nut | | |
| | D38999/45 | DIV41 | Solder | | |

**VERSATILE**

- Variety of tail and standoff lengths
- Custom extended lengths available
- Choice of finishes

**FLEXIBLE**

- Contacts available alone or assembled in connectors

## PC Tail Contacts and Connectors

TE 38999 connectors are available with PC tail contacts for mounting to pc boards or flex circuits. Alignment disks featured on the high density PCB connectors provide a fitting pattern on the tail side, making installation easier.

### PC Contact Part Numbering System

**D3 J F A35 P N 1 B W G**

**BASIC IDENTIFIER**
- **D3** Extended Pin 38999-Style Receptacle Connector

**MOUNTING STYLE**
- **B** Box Mount
- **C** Square Flange with Clinch Nuts
- **D** Double Flange
- **H** Square Flange with Helicoils
- **J** Jam Nut
- **S** Square Flange (Standard)

**CLASS**
- **F** Aluminum, Nickel Plated
- **G** Aluminum, Nickel Plated, Space Grade
- **J** Composite, Olive Drab Cadmium Plated
- **M** Composite, Nickel Plated
- **T** Aluminum, PTFE Nickel Plated
- **W** Aluminum, Olive Drab Cadmium Plated
- **Z** Aluminum, Black Zinc Nickel Plated

**SHELL SIZE**
- **A (9), B (11), C (13), D (15), E (17), F (19), G (21), H (23), J (25)**

**INSERT ARRANGEMENT**
- See Insert Arrangement Table

**CONTACT STYLE**
- **P** Pin
- **S** Socket

**KEYING**
- **N** Normal
- **A, B, C, D, E**

**EXTENDED TAIL FINISH**
- **G** Gold
- **T** Tin/Solder Dip

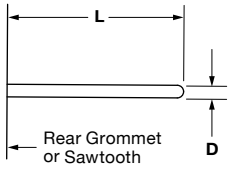


**SOLDER LEG DIAMETER (D ±0.001): NO STANDOFFS**

| | Contact Size | | | |
|---|---|---|---|---|
| | Size 22 | Size 20 | Size 16 | Size 12 |
| N | **0.635** 0.025 | **1.02** 0.040 | **2.03** 0.080 | **2.39** 0.094 |
| W | **0.48** 0.019 | **0.48** 0.019 | **1.02** 0.044 | **1.57** 0.062 |
| T | **0.48** 0.019 | **0.48** 0.019 | **1.57** 0.062 | **1.57** 0.062 |
| U | **0.71** 0.028 | **0.71** 0.028 | **1.57** 0.062 | **1.57** 0.062 |

**CONTACT EXTENSION LENGTH (L)**
- See Tables

**REAR CONFIGURATION**
- **1** Epoxy Seal
- **2** Grommet Seal

# PC Tail Contacts and Connectors

## Jam Nut Receptacles

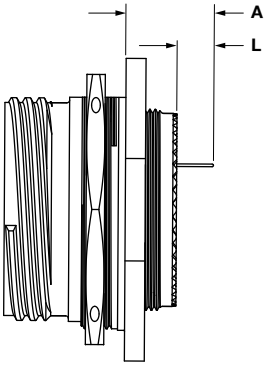


| Code | Dim L | | | Dim A | |
|---|---|---|---|---|---|
| | From Grommet | From Sawtooth | | From Front of Jam Nut Flange | |
| | All | Aluminum | Composite | Aluminum | Composite |
| A | **4.14** 0.163 | **4.14** 0.163 | **2.92** 0.115 | **13.54** 0.533 | **13.74** 0.541 |
| B | **5.33** 0.210 | **5.33** 0.210 | **4.11** 0.162 | **14.73** 0.580 | **14.94** 0.588 |
| C | **5.84** 0.230 | **5.84** 0.230 | **4.62** 0.182 | **15.24** 0.600 | **15.44** 0.608 |
| D | **6.76** 0.266 | **6.76** 0.266 | **5.54** 0.218 | **16.05** 0.632 | **16.36** 0.644 |
| E | **7.98** 0.314 | **7.98** 0.314 | **6.50** 0.256 | **17.37** 0.684 | **17.32** 0.682 |

**Millimeters** Inches

## Square Flange Receptacles

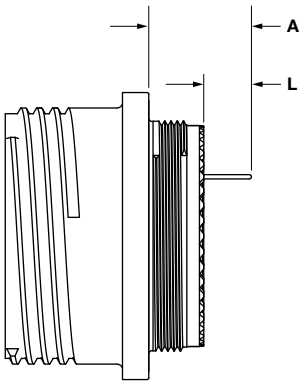


| Code | Dim L | | | Dim A | | | |
|---|---|---|---|---|---|---|---|
| | From Grommet | From Sawtooth | | Distance from Square Flange | | | |
| | | | | Shell Sizes 9–19 | | Shell Sizes 21–25 | |
| | All | Aluminum | Composite | Aluminum | Composite | Aluminum | Composite |
| A | **4.14** 0.163 | **4.42** 0.174 | **3.94** 0.155 | **13.97** 0.550 | **13.11** 0.516 | **13.39** 0.527 | **13.11** 0.516 |
| B | **5.33** 0.210 | **5.61** 0.221 | **5.13** 0.202 | **15.16** 0.597 | **14.30** 0.563 | **14.58** 0.574 | **14.30** 0.563 |
| C | **5.84** 0.230 | **6.12** 0.241 | **5.64** 0.222 | **15.67** 0.617 | **14.81** 0.583 | **15.09** 0.594 | **14.81** 0.583 |
| D | **6.76** 0.266 | **7.04** 0.277 | **6.55** 0.258 | **16.59** 0.653 | **15.72** 0.619 | **16.00** 0.630 | **15.72** 0.619 |
| E | **7.98** 0.314 | **8.26** 0.325 | **7.77** 0.306 | **17.81** 0.701 | **16.94** 0.667 | **17.22** 0.678 | **16.94** 0.667 |

**Millimeters** Inches

# PC Tail Contacts and Connectors

## Box Mount Receptacles

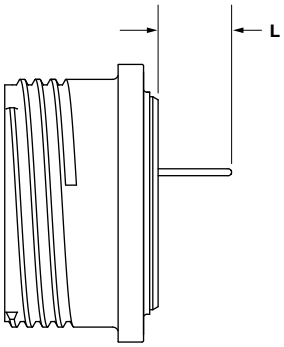


| Code | Dim L |
|---|---|
| A | **9.78**<br>0.385 |
| D | **12.40**<br>0.488 |
| J | **7.67**<br>0.302 |

**Millimeters** Inches
Only epoxy seal (1) available for Box Mount Receptacles

## Double Flange Receptacles

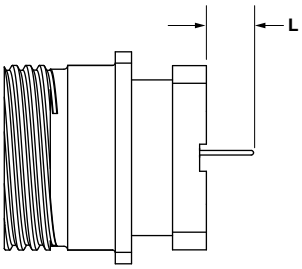


| Code | Dim L |
|---|---|
| E | **1.68**<br>0.066 |
| F | **2.97**<br>0.117 |
| G | **4.62**<br>0.182 |
| H | **5.64**<br>0.222 |

**Millimeters** Inches

## 9-06/9-35

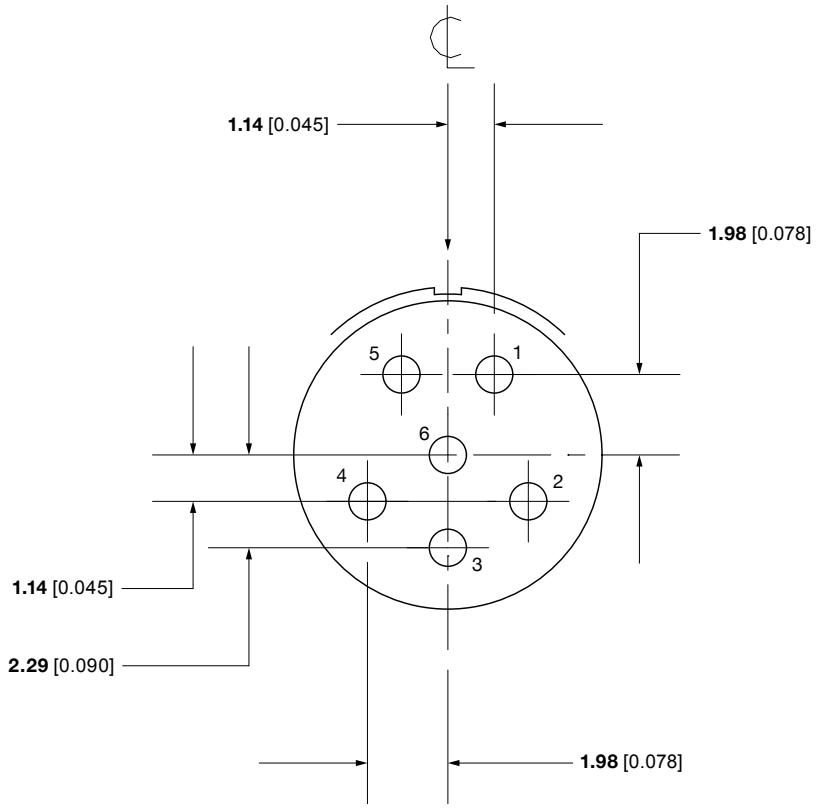


## 9-44

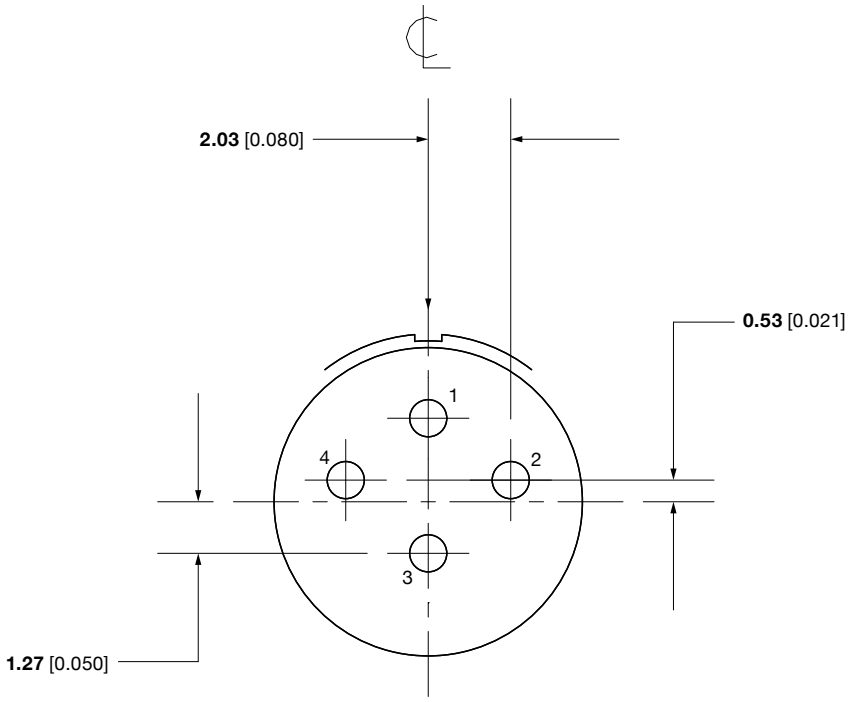


9-44

## 9-98

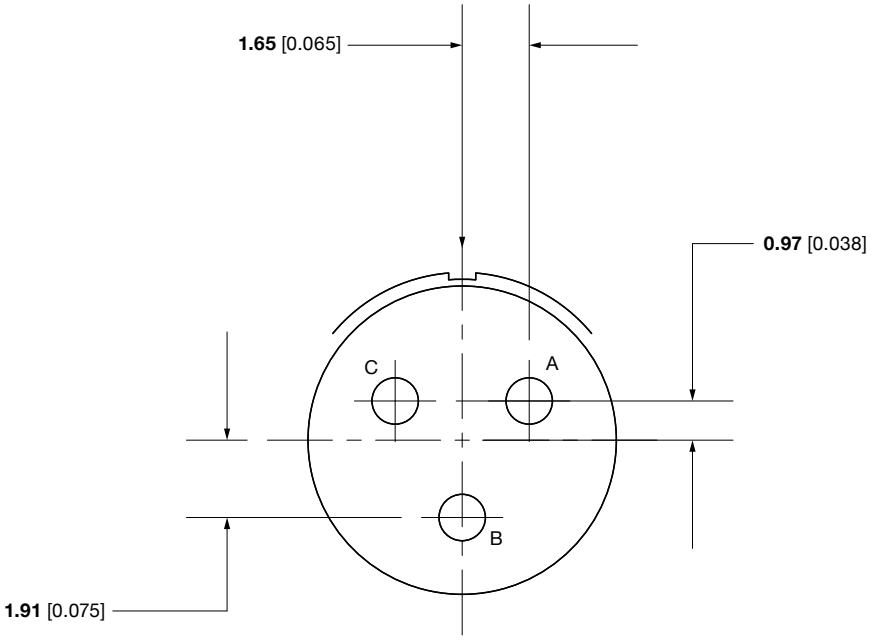


9-98

## 11-02

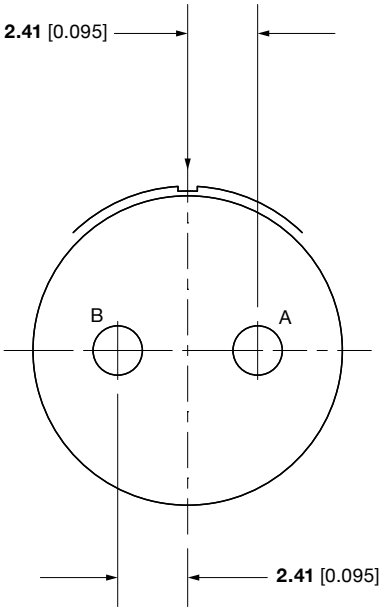

## 11-04

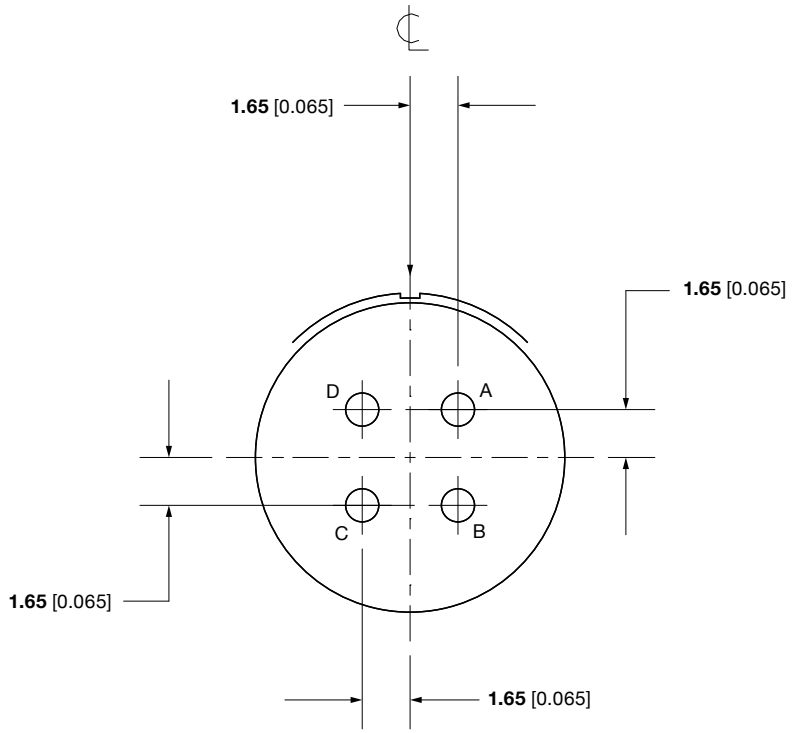
1.65 [0.065]
1.65 [0.065]
D
A
C
B
1.65 [0.065]
1.65 [0.065]

## 11-05

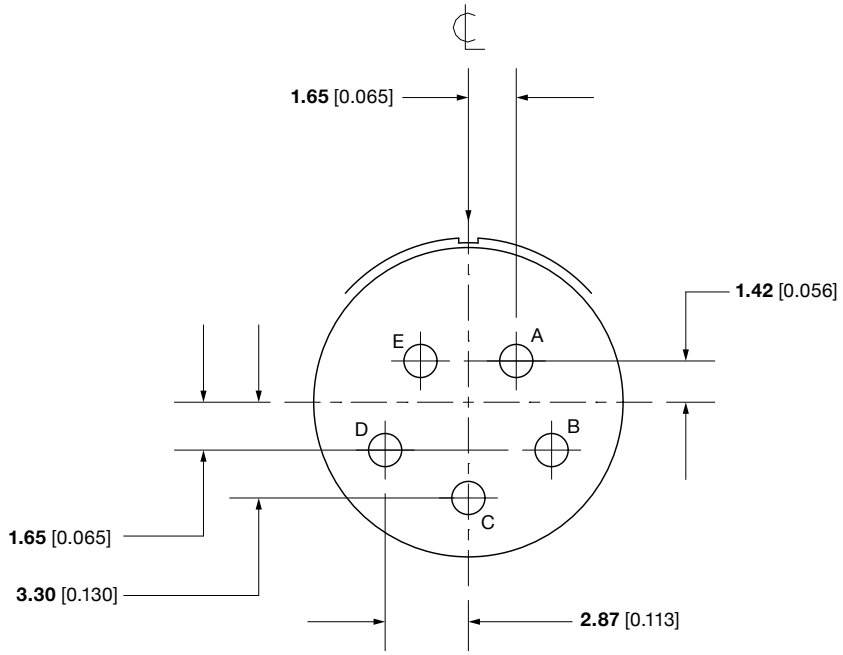
1.65 [0.065]
1.42 [0.056]
E
A
D
B
C
1.65 [0.065]
3.30 [0.130]
2.87 [0.113]

## 11-13/11-35

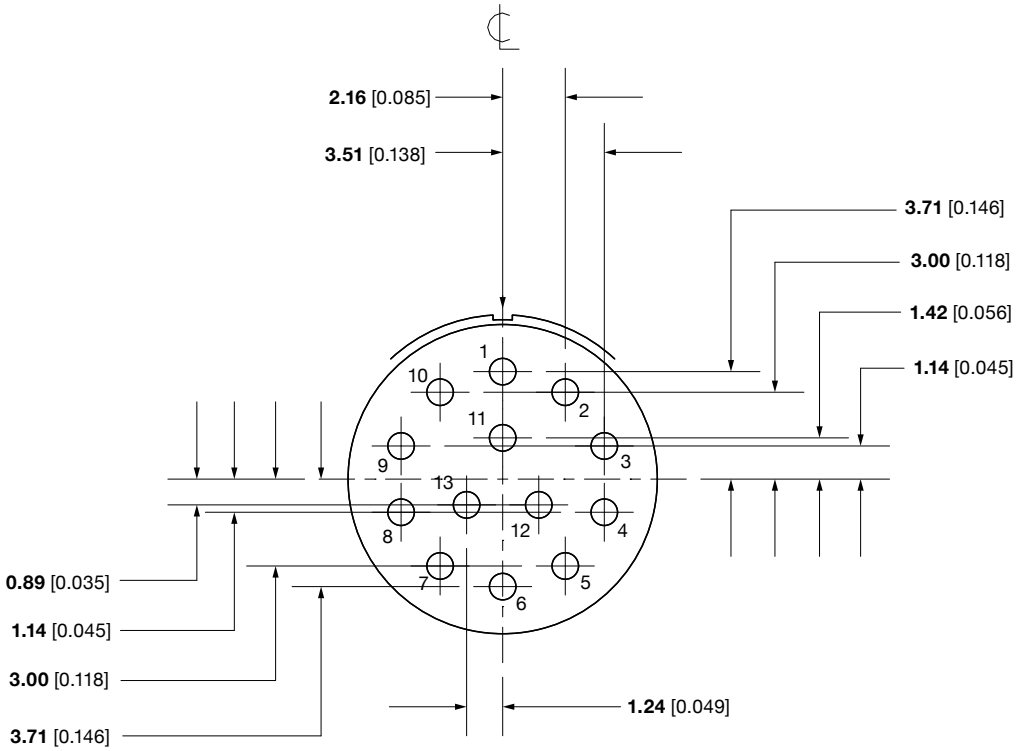


## 11-98

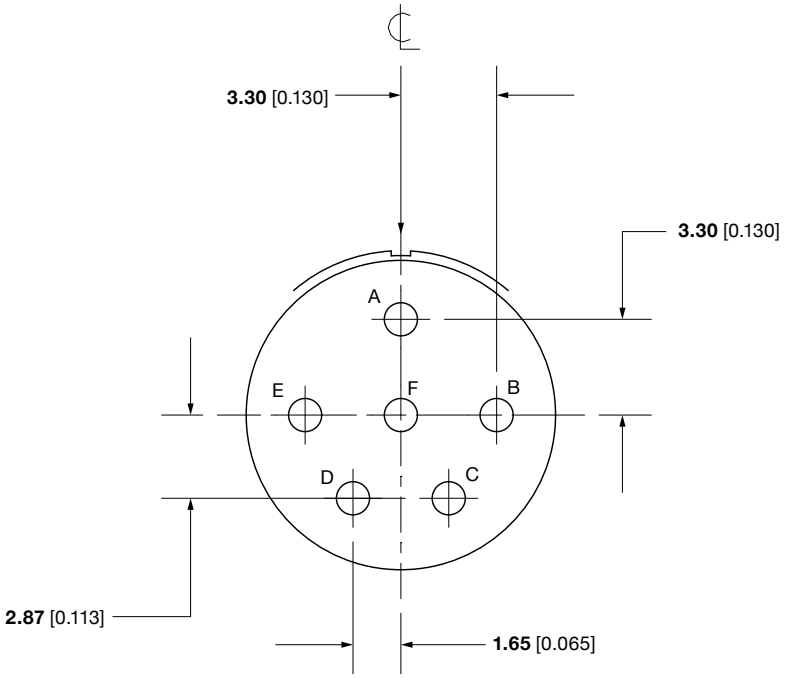

## 11-99

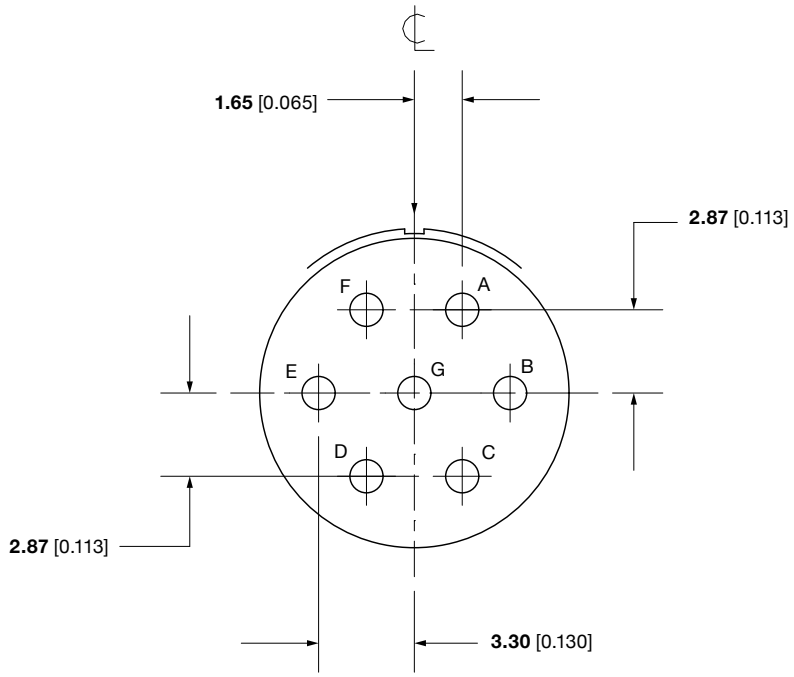
1.65 [0.065]
2.87 [0.113]
F
A
E
G
B
D
C
2.87 [0.113]
3.30 [0.130]

## 13-04

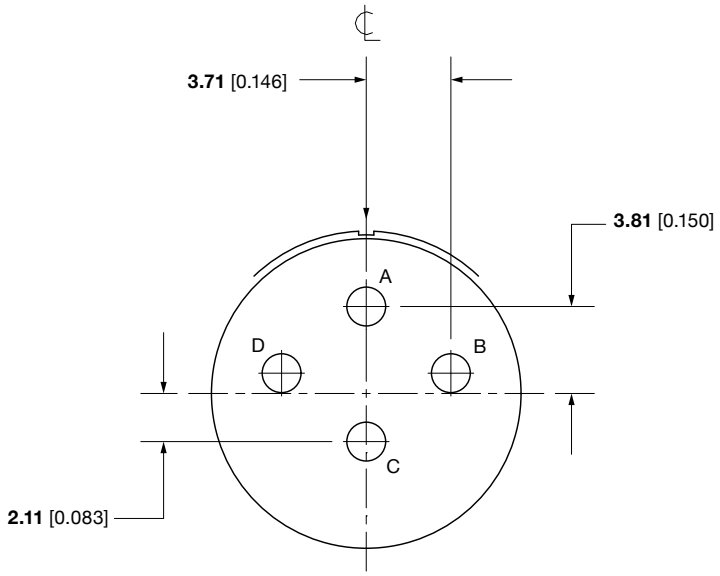
3.71 [0.146]
3.81 [0.150]
A
D
B
C
2.11 [0.083]

## 13-08

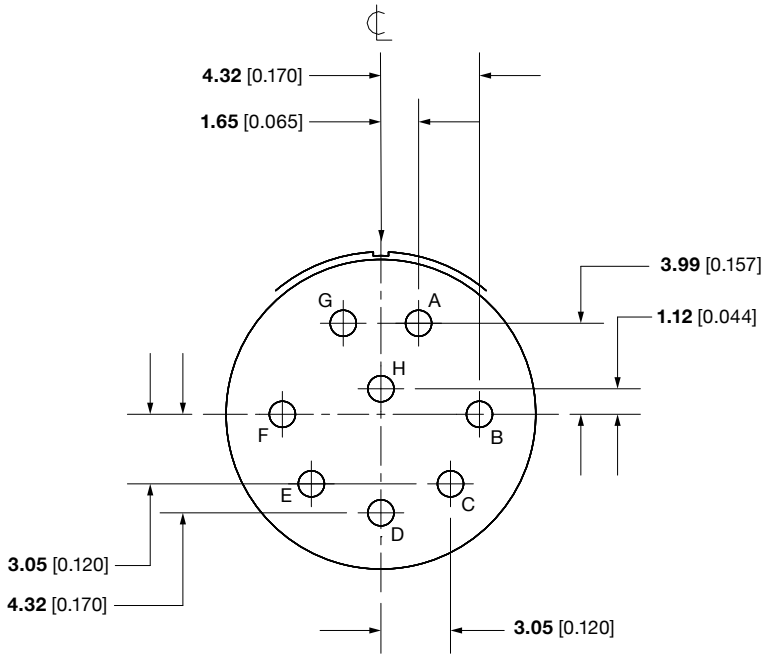


## 13-22/13-35

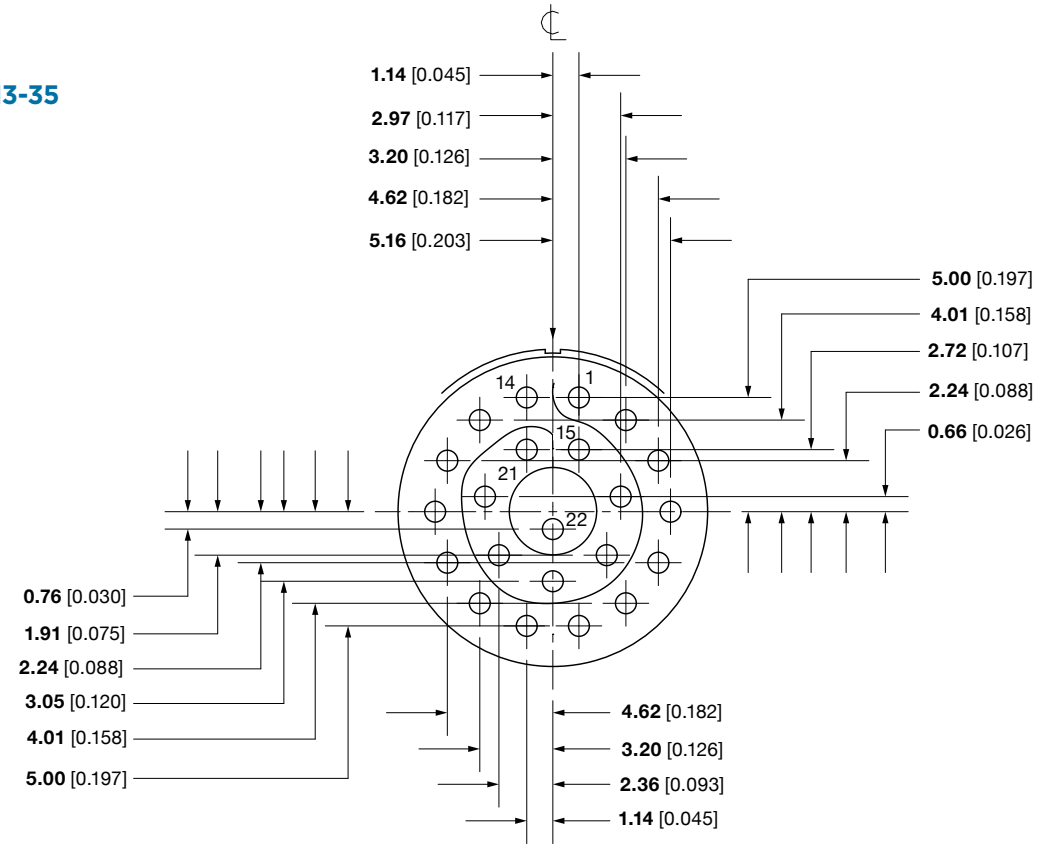

## 13-98

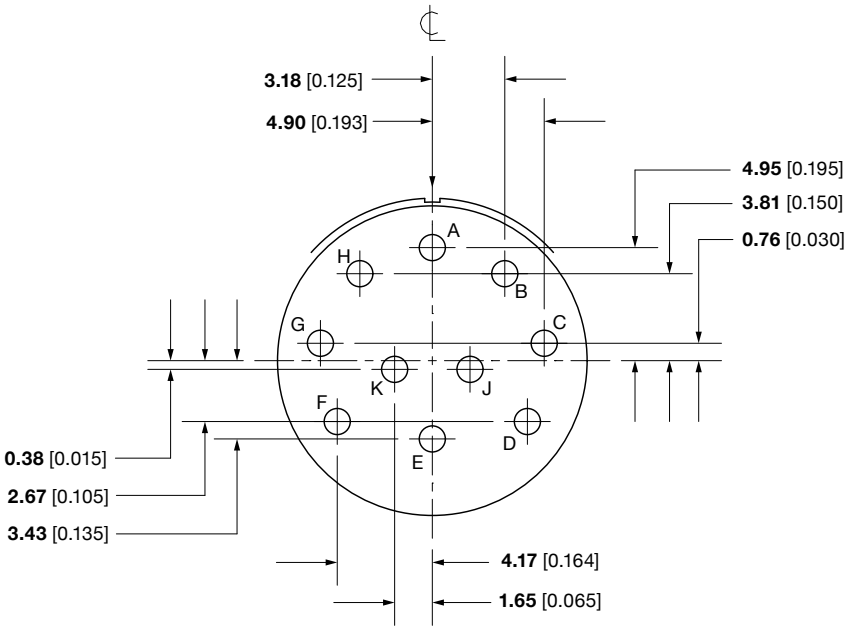
3.18 [0.125]
4.90 [0.193]
4.95 [0.195]
3.81 [0.150]
0.76 [0.030]
A
B
C
D
E
F
G
H
J
K
0.38 [0.015]
2.67 [0.105]
3.43 [0.135]
4.17 [0.164]
1.65 [0.065]

## 15-05

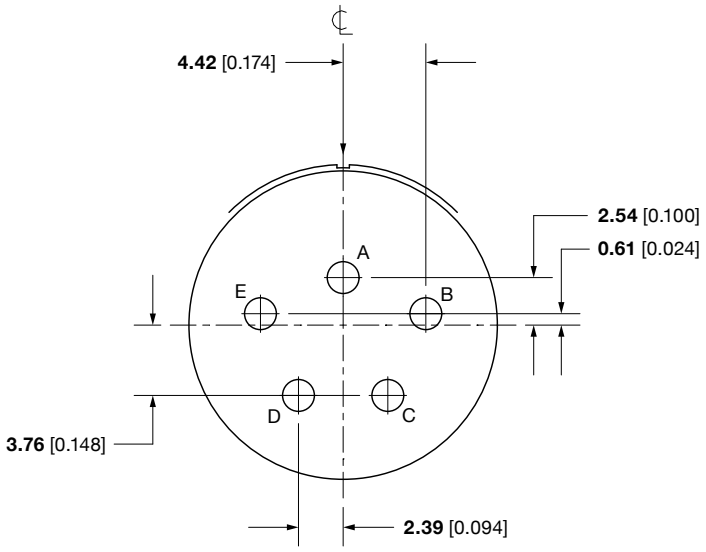
4.42 [0.174]
2.54 [0.100]
0.61 [0.024]
A
B
C
D
E
3.76 [0.148]
2.39 [0.094]

## 15-15

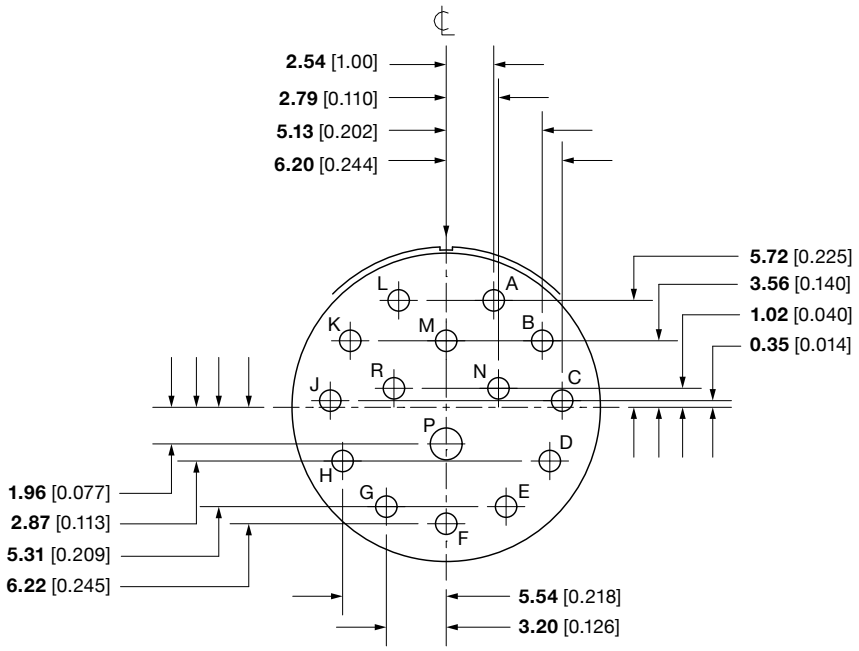
2.54 [1.00]
2.79 [0.110]
5.13 [0.202]
6.20 [0.244]
5.72 [0.225]
3.56 [0.140]
1.02 [0.040]
0.35 [0.014]
L
A
K
M
B
R
N
C
J
P
D
H
G
E
F
1.96 [0.077]
2.87 [0.113]
5.31 [0.209]
6.22 [0.245]
5.54 [0.218]
3.20 [0.126]

## 15-18

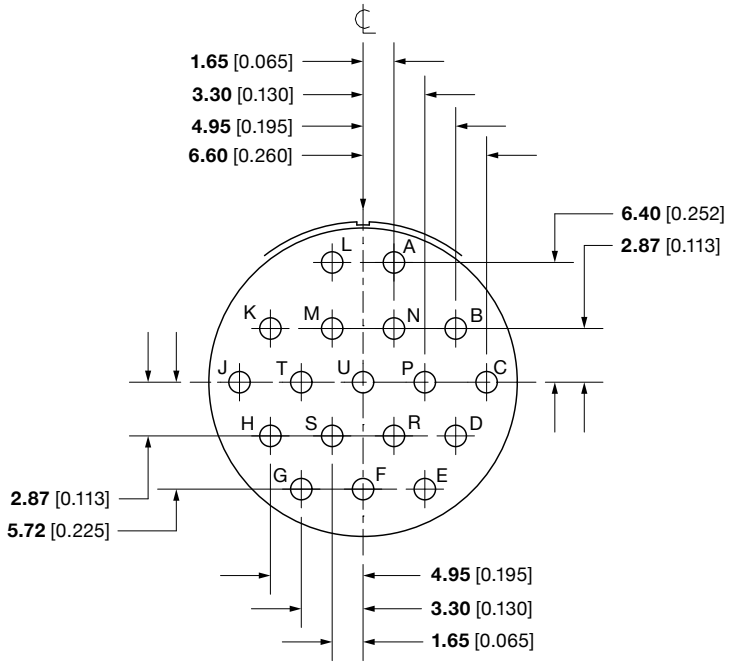
1.65 [0.065]
3.30 [0.130]
4.95 [0.195]
6.60 [0.260]
6.40 [0.252]
2.87 [0.113]
L
A
K
M
N
B
J
T
U
P
C
H
S
R
D
G
F
E
2.87 [0.113]
5.72 [0.225]
4.95 [0.195]
3.30 [0.130]
1.65 [0.065]

## 15-19

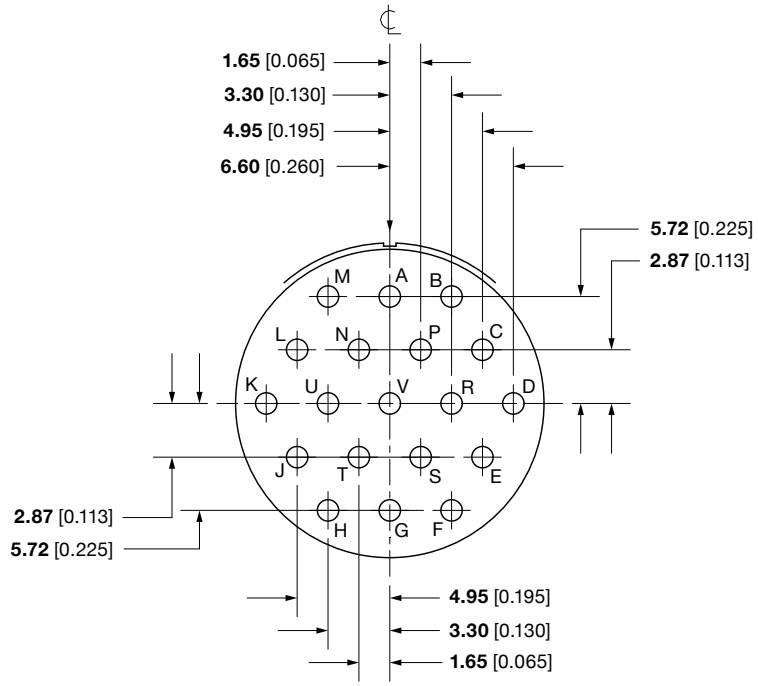


## 15-35/15-37

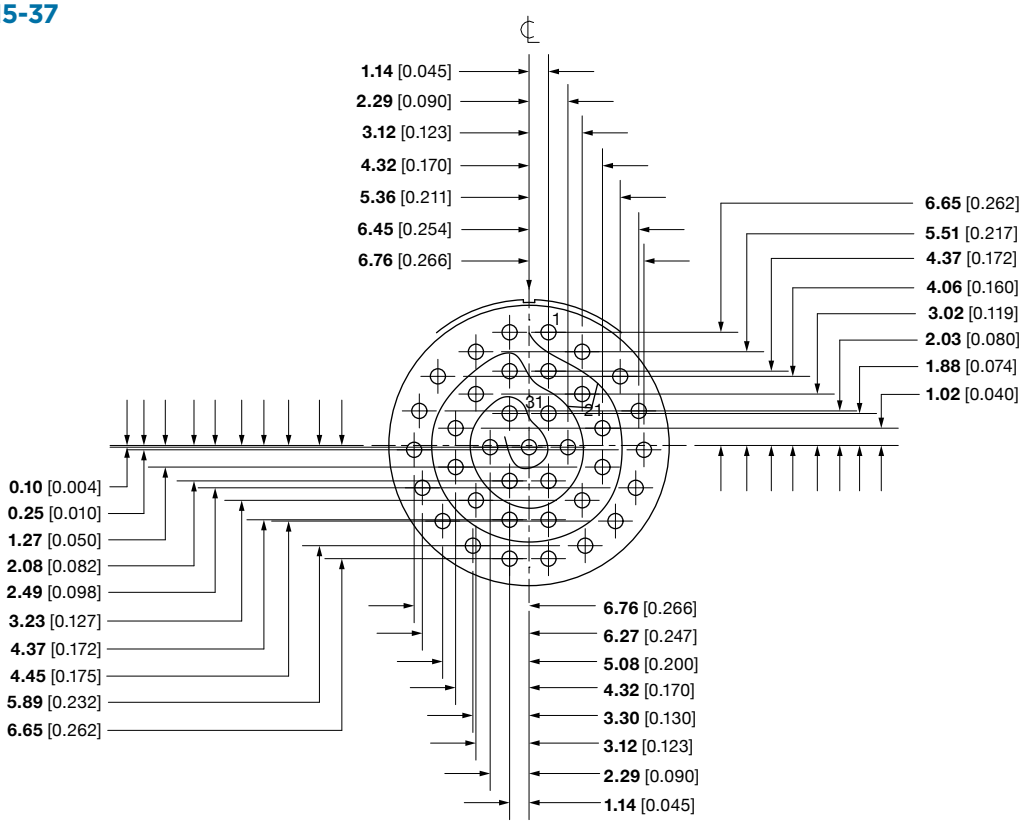


15-35

## 15-97

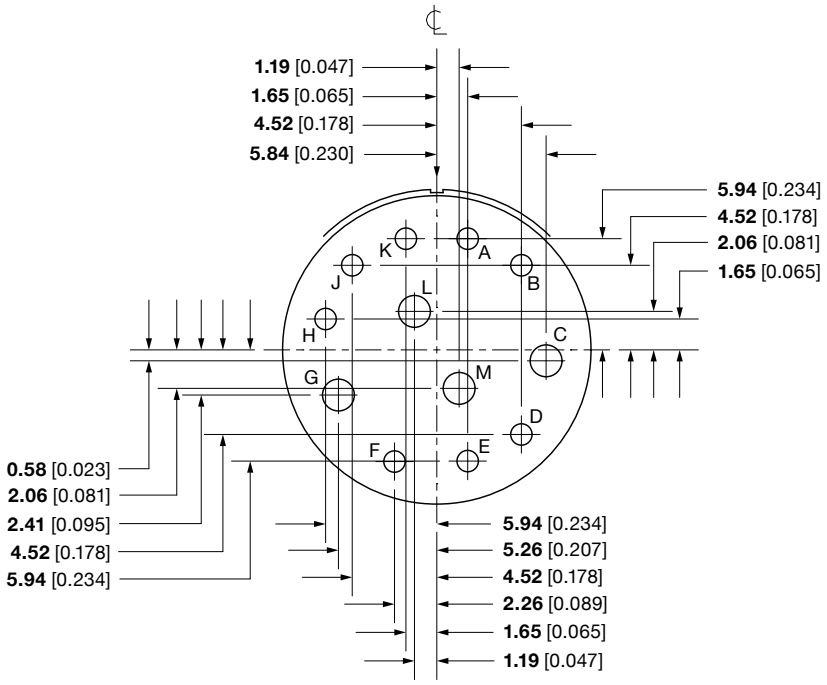


## 17-06

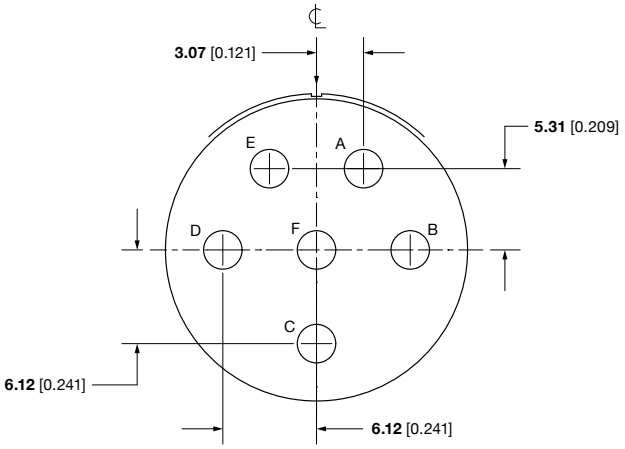


N/A

## 17-08

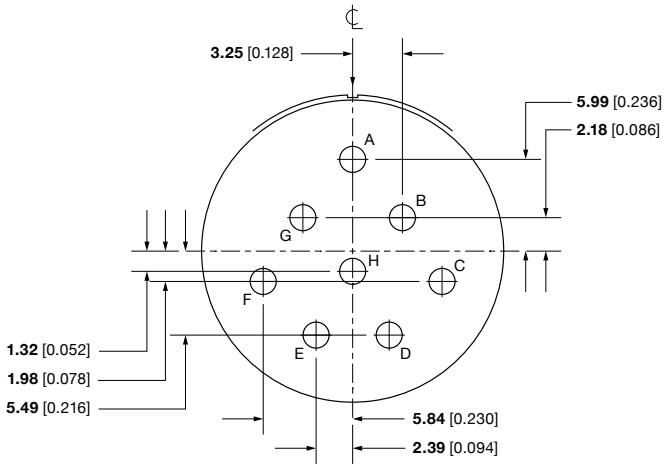

## 17-26

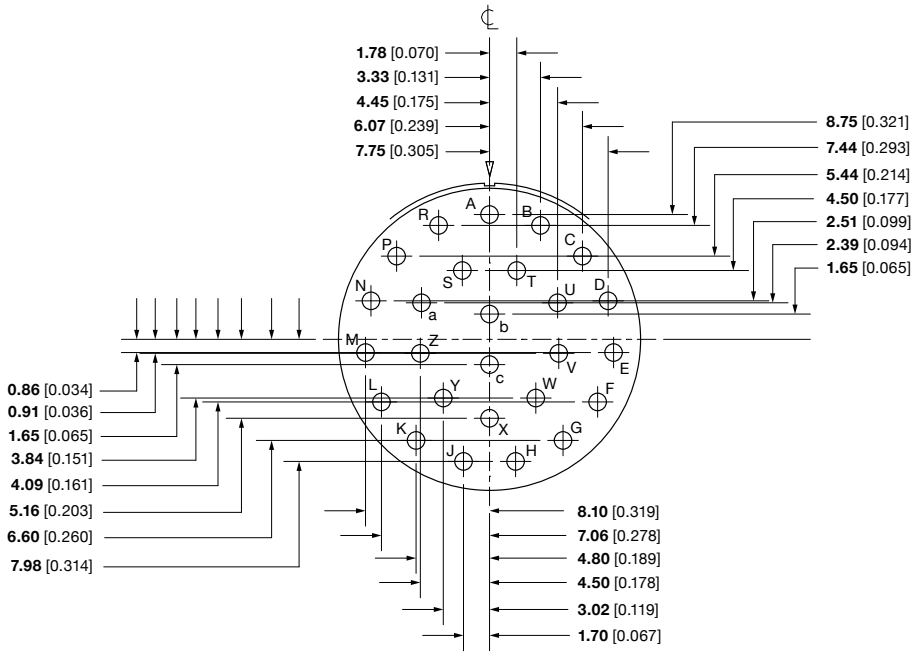


## 17-35/17-55

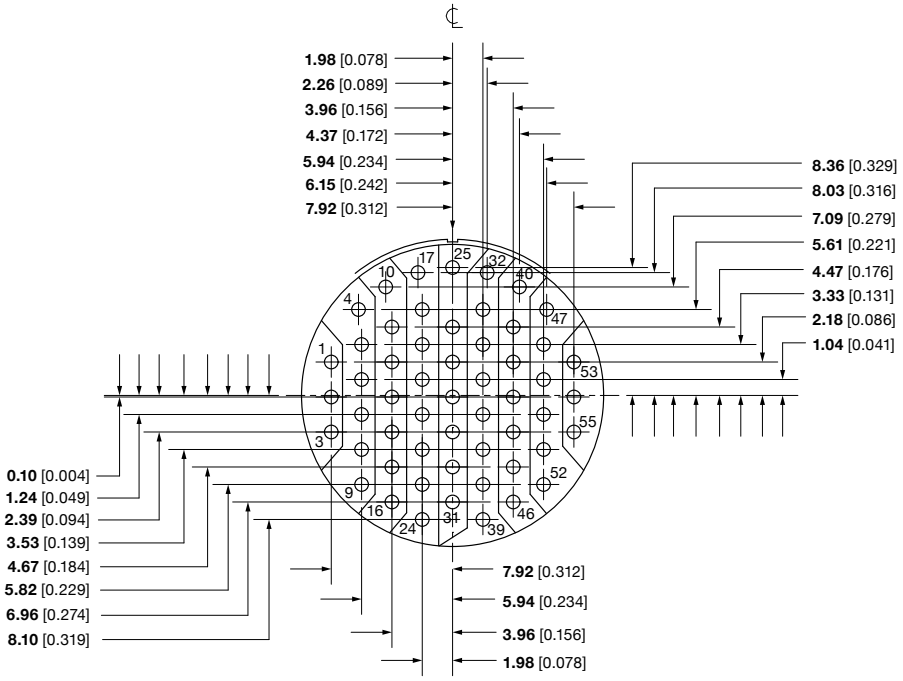

## 17-99

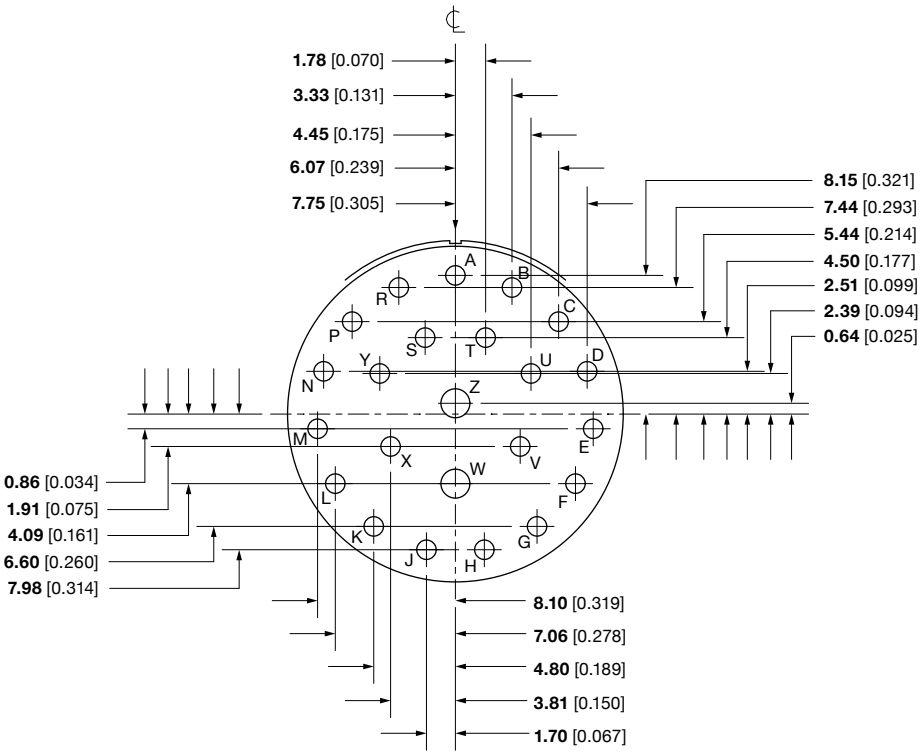
1.78 [0.070]
3.33 [0.131]
4.45 [0.175]
6.07 [0.239]
7.75 [0.305]
8.15 [0.321]
7.44 [0.293]
5.44 [0.214]
4.50 [0.177]
2.51 [0.099]
2.39 [0.094]
0.64 [0.025]
0.86 [0.034]
1.91 [0.075]
4.09 [0.161]
6.60 [0.260]
7.98 [0.314]
8.10 [0.319]
7.06 [0.278]
4.80 [0.189]
3.81 [0.150]
1.70 [0.067]
A
B
C
D
E
F
G
H
J
K
L
M
N
P
R
S
T
U
V
W
X
Y
Z

## 19-11

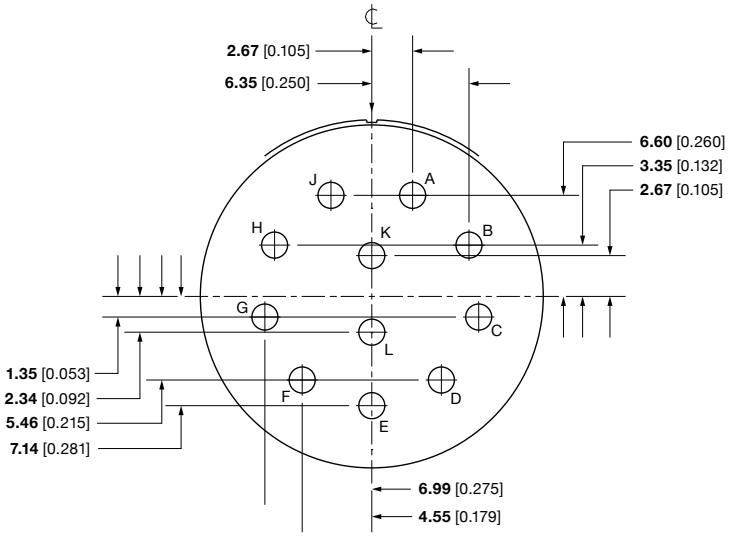
2.67 [0.105]
6.35 [0.250]
6.60 [0.260]
3.35 [0.132]
2.67 [0.105]
1.35 [0.053]
2.34 [0.092]
5.46 [0.215]
7.14 [0.281]
6.99 [0.275]
4.55 [0.179]
A
B
C
D
E
F
G
H
J
K
L

## 19-28

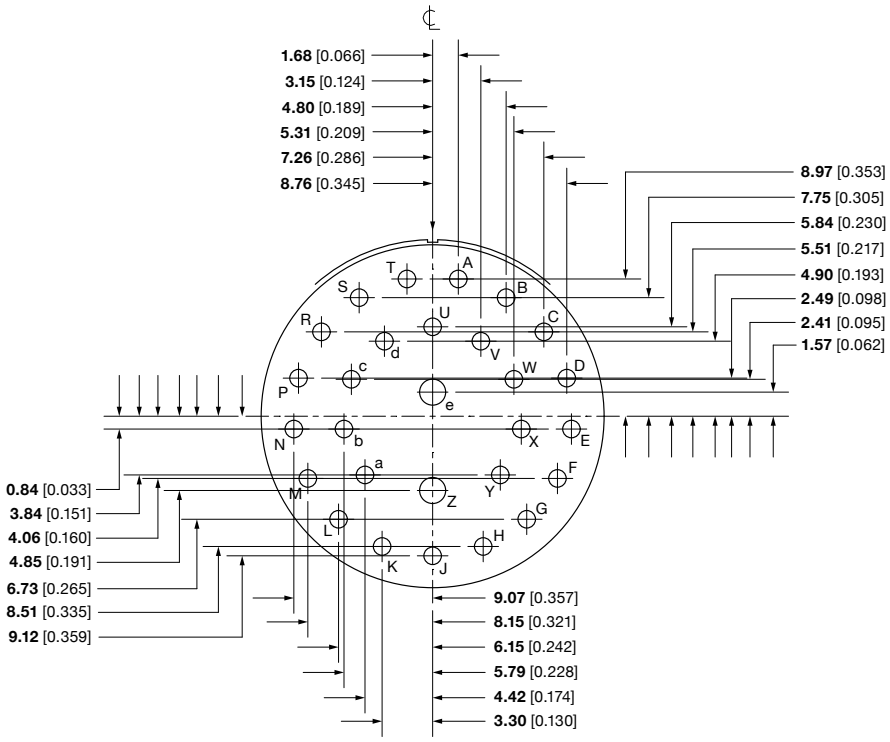
1.68 [0.066]
3.15 [0.124]
4.80 [0.189]
5.31 [0.209]
7.26 [0.286]
8.76 [0.345]
8.97 [0.353]
7.75 [0.305]
5.84 [0.230]
5.51 [0.217]
4.90 [0.193]
2.49 [0.098]
2.41 [0.095]
1.57 [0.062]
0.84 [0.033]
3.84 [0.151]
4.06 [0.160]
4.85 [0.191]
6.73 [0.265]
8.51 [0.335]
9.12 [0.359]
9.07 [0.357]
8.15 [0.321]
6.15 [0.242]
5.79 [0.228]
4.42 [0.174]
3.30 [0.130]

## 19-30

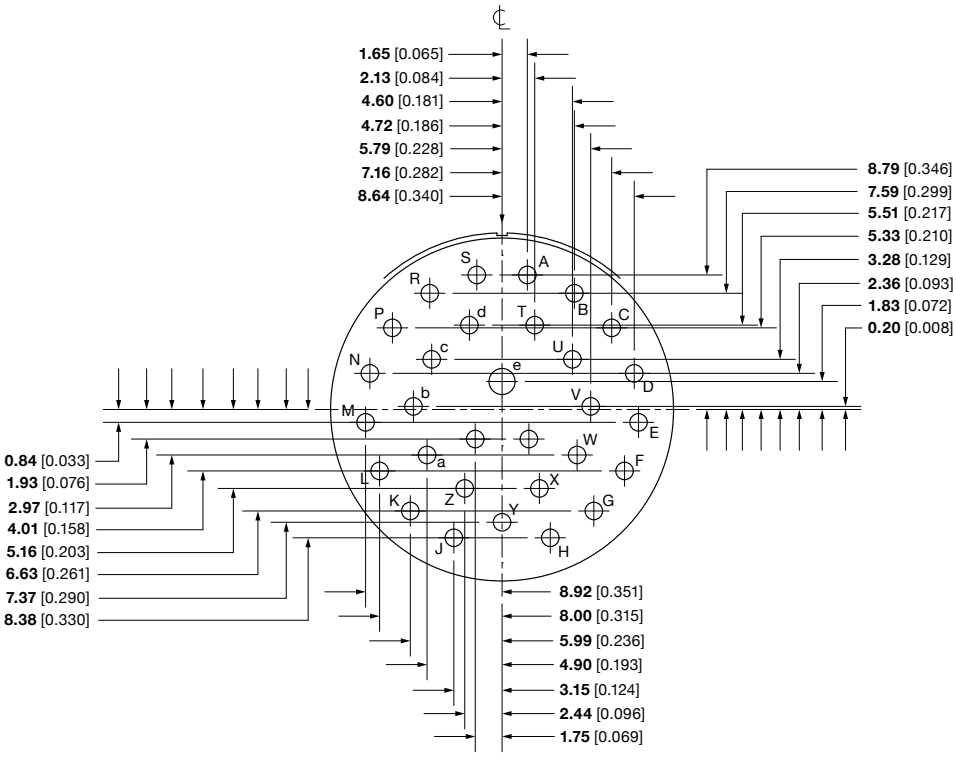
1.65 [0.065]
2.13 [0.084]
4.60 [0.181]
4.72 [0.186]
5.79 [0.228]
7.16 [0.282]
8.64 [0.340]
8.79 [0.346]
7.59 [0.299]
5.51 [0.217]
5.33 [0.210]
3.28 [0.129]
2.36 [0.093]
1.83 [0.072]
0.20 [0.008]
0.84 [0.033]
1.93 [0.076]
2.97 [0.117]
4.01 [0.158]
5.16 [0.203]
6.63 [0.261]
7.37 [0.290]
8.38 [0.330]
8.92 [0.351]
8.00 [0.315]
5.99 [0.236]
4.90 [0.193]
3.15 [0.124]
2.44 [0.096]
1.75 [0.069]

## 19-32

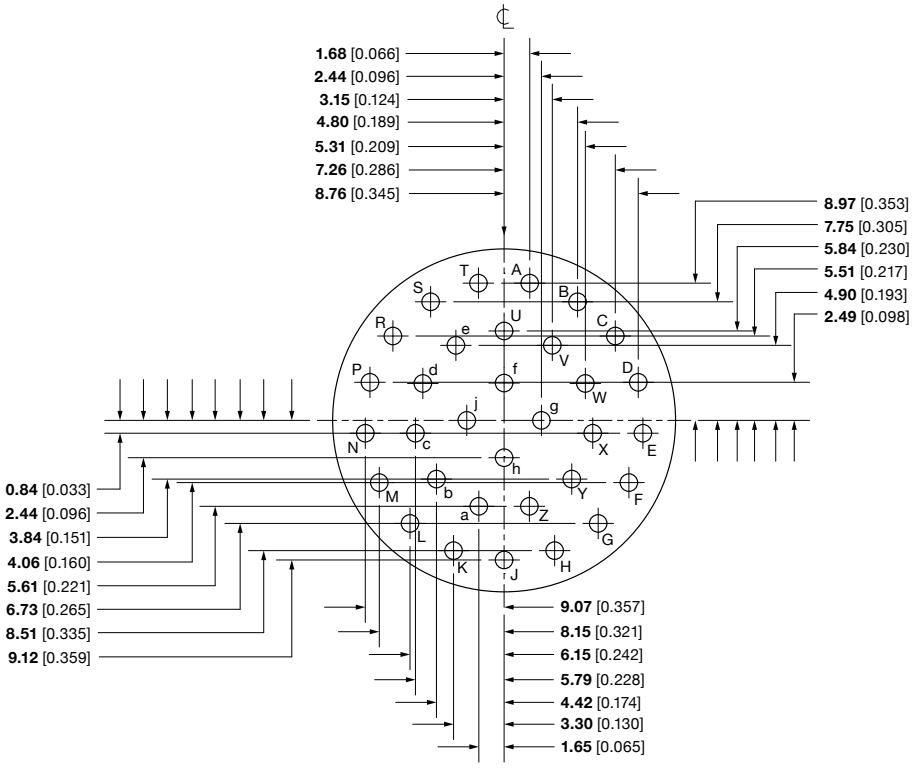


## 19-35/19-66

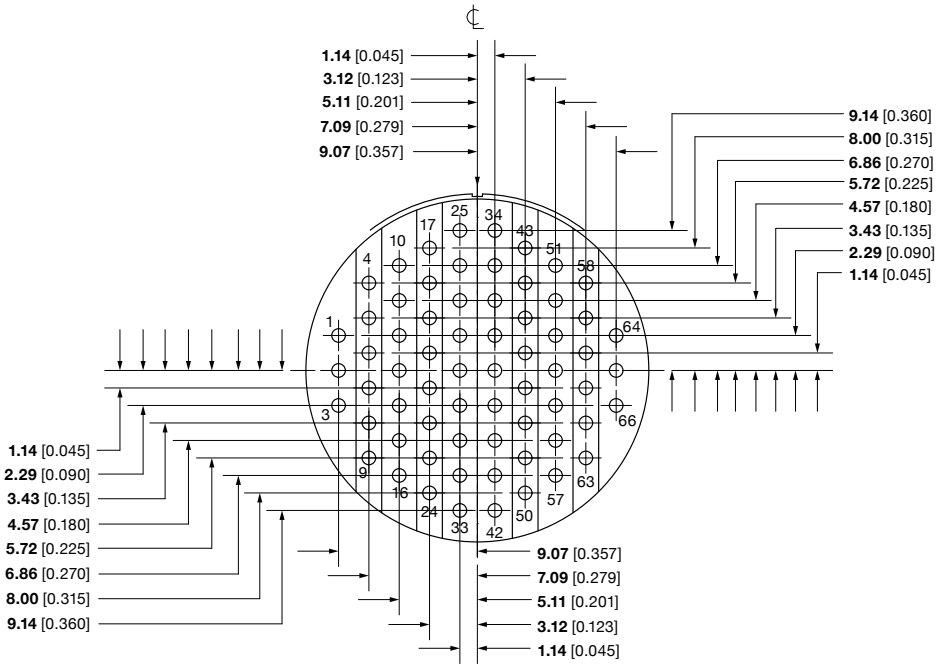

## 19-45

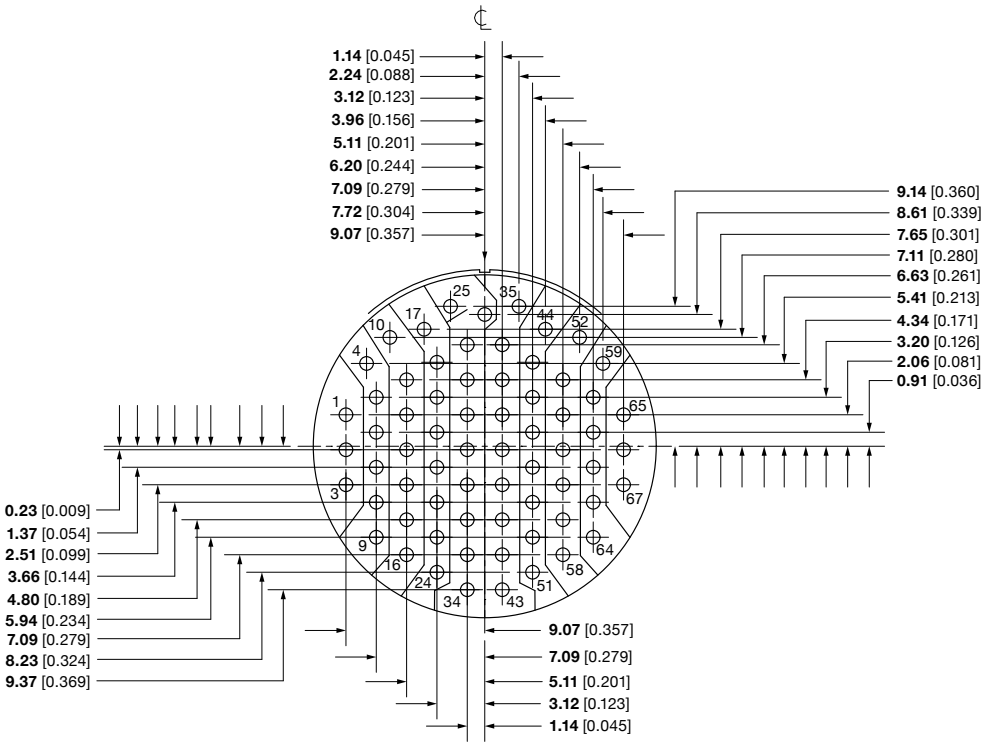
1.14 [0.045]
2.24 [0.088]
3.12 [0.123]
3.96 [0.156]
5.11 [0.201]
6.20 [0.244]
7.09 [0.279]
7.72 [0.304]
9.07 [0.357]
9.14 [0.360]
8.61 [0.339]
7.65 [0.301]
7.11 [0.280]
6.63 [0.261]
5.41 [0.213]
4.34 [0.171]
3.20 [0.126]
2.06 [0.081]
0.91 [0.036]
0.23 [0.009]
1.37 [0.054]
2.51 [0.099]
3.66 [0.144]
4.80 [0.189]
5.94 [0.234]
7.09 [0.279]
8.23 [0.324]
9.37 [0.369]
9.07 [0.357]
7.09 [0.279]
5.11 [0.201]
3.12 [0.123]
1.14 [0.045]

## 21-11

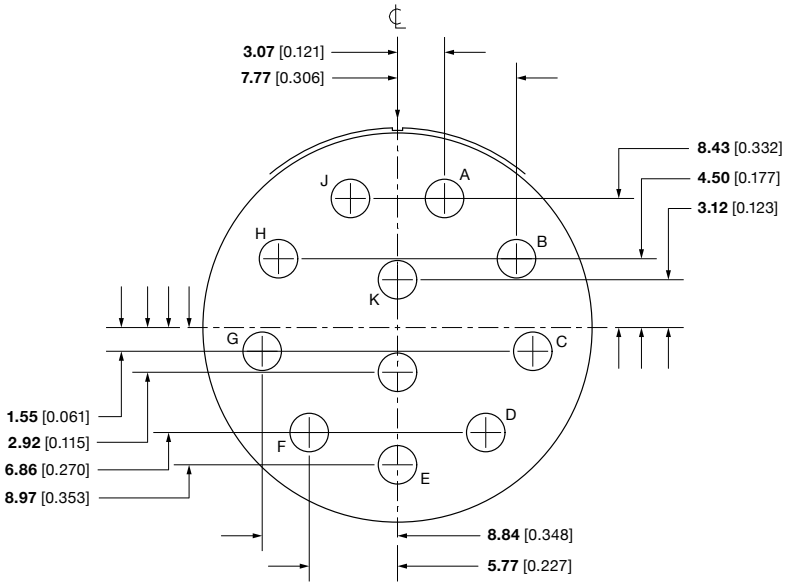
3.07 [0.121]
7.77 [0.306]
8.43 [0.332]
4.50 [0.177]
3.12 [0.123]
1.55 [0.061]
2.92 [0.115]
6.86 [0.270]
8.97 [0.353]
8.84 [0.348]
5.77 [0.227]

## 21-16

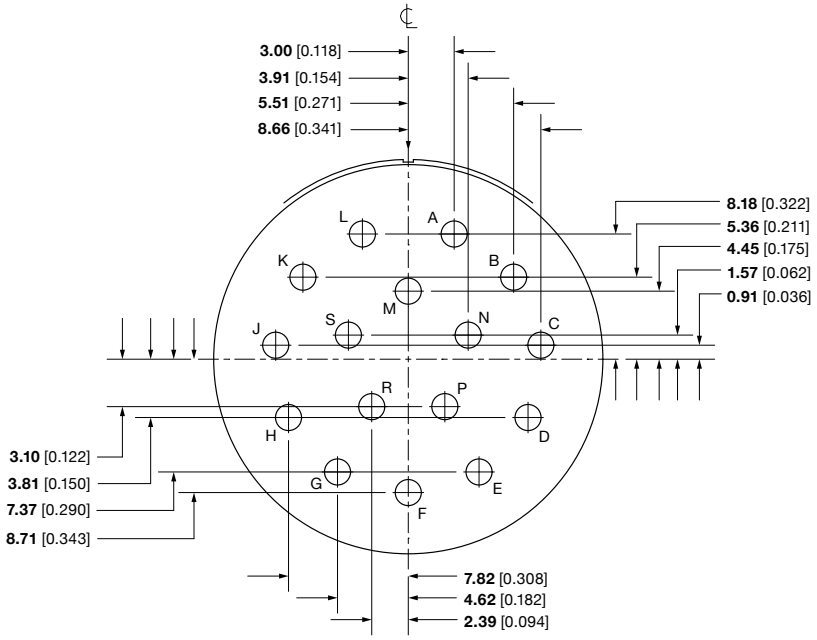
3.00 [0.118]
3.91 [0.154]
5.51 [0.271]
8.66 [0.341]
8.18 [0.322]
5.36 [0.211]
4.45 [0.175]
1.57 [0.062]
0.91 [0.036]
L
A
K
B
M
S
N
J
C
R
P
H
D
G
E
F
3.10 [0.122]
3.81 [0.150]
7.37 [0.290]
8.71 [0.343]
7.82 [0.308]
4.62 [0.182]
2.39 [0.094]

## 21-24

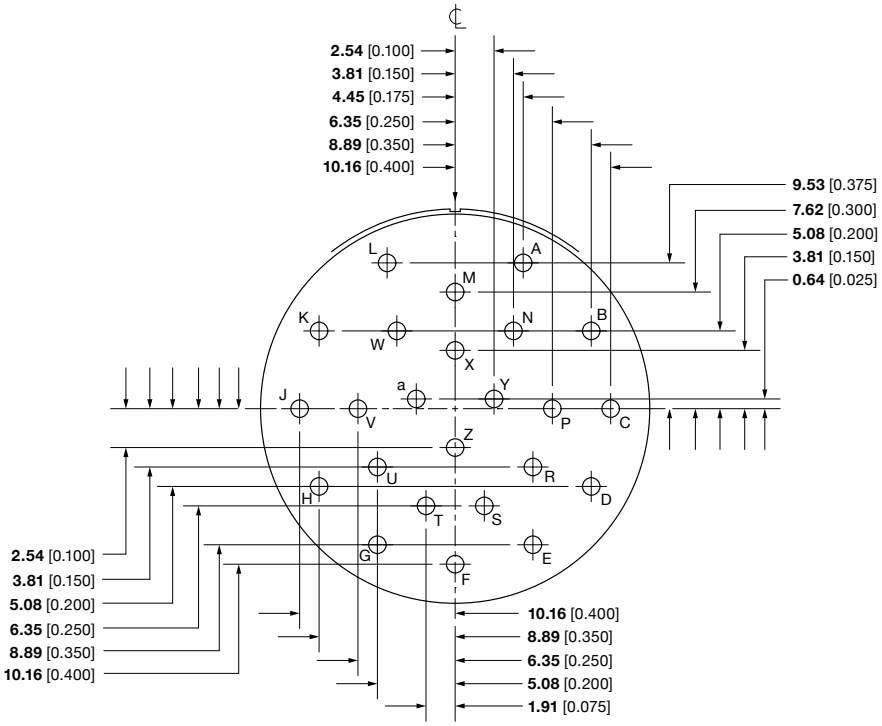
2.54 [0.100]
3.81 [0.150]
4.45 [0.175]
6.35 [0.250]
8.89 [0.350]
10.16 [0.400]
9.53 [0.375]
7.62 [0.300]
5.08 [0.200]
3.81 [0.150]
0.64 [0.025]
L
A
M
K
N
B
W
X
a
Y
J
V
P
C
Z
U
R
H
D
T
S
G
E
F
2.54 [0.100]
3.81 [0.150]
5.08 [0.200]
6.35 [0.250]
8.89 [0.350]
10.16 [0.400]
10.16 [0.400]
8.89 [0.350]
6.35 [0.250]
5.08 [0.200]
1.91 [0.075]

**N/A**

## 21-25

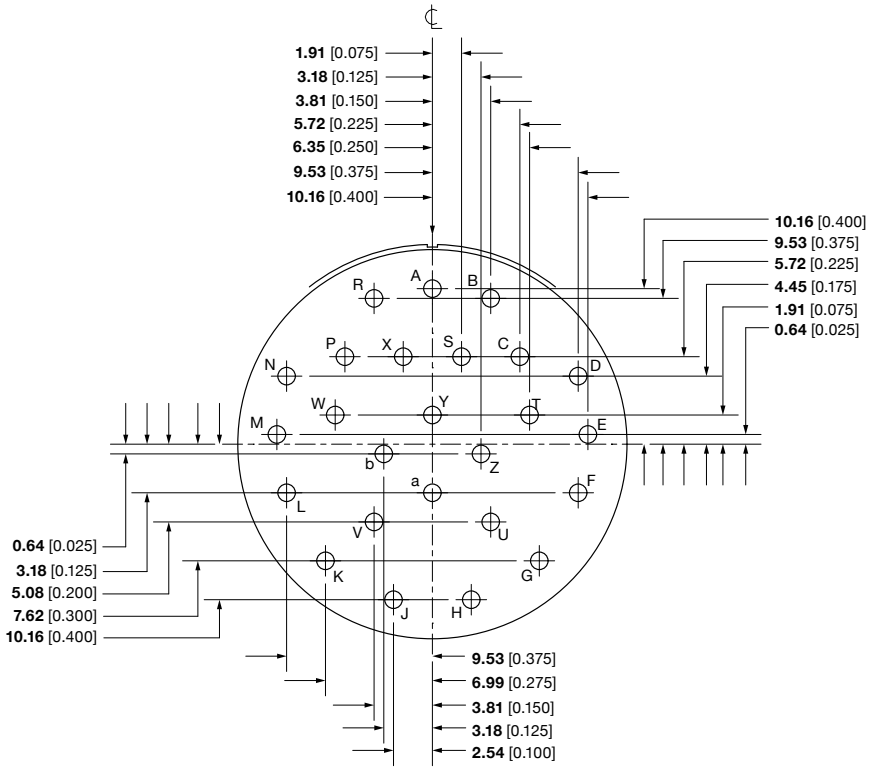
1.91 [0.075]
3.18 [0.125]
3.81 [0.150]
5.72 [0.225]
6.35 [0.250]
9.53 [0.375]
10.16 [0.400]
10.16 [0.400]
9.53 [0.375]
5.72 [0.225]
4.45 [0.175]
1.91 [0.075]
0.64 [0.025]
R
A
B
P
X
S
C
N
D
W
Y
T
M
E
b
Z
a
F
L
V
U
K
G
J
H
0.64 [0.025]
3.18 [0.125]
5.08 [0.200]
7.62 [0.300]
10.16 [0.400]
9.53 [0.375]
6.99 [0.275]
3.81 [0.150]
3.18 [0.125]
2.54 [0.100]

N/A

## 21-27

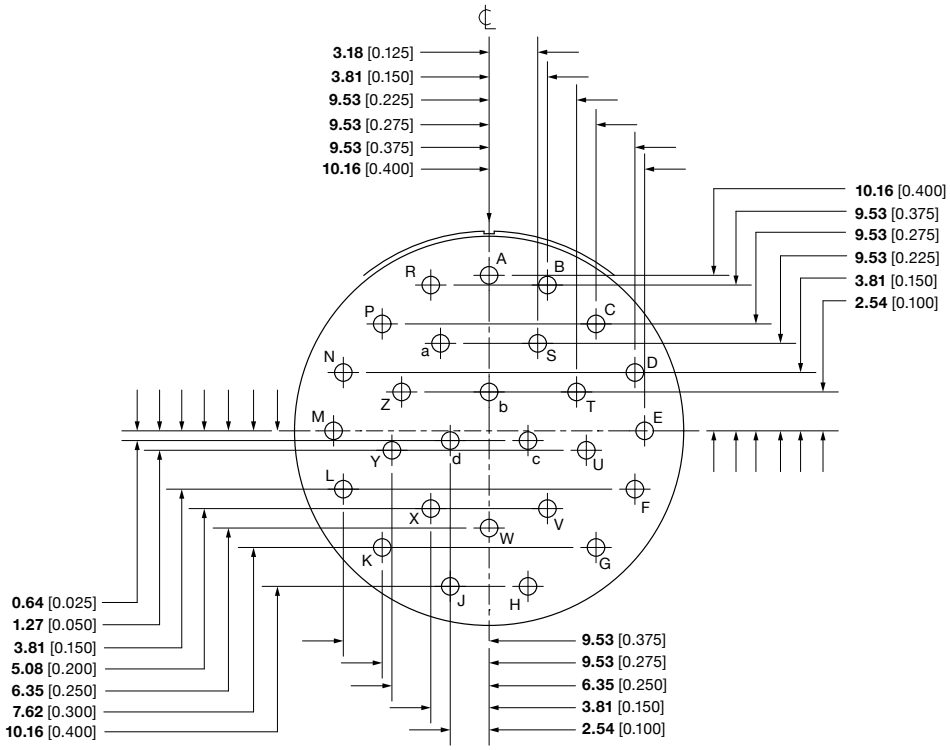
3.18 [0.125]
3.81 [0.150]
9.53 [0.225]
9.53 [0.275]
9.53 [0.375]
10.16 [0.400]
10.16 [0.400]
9.53 [0.375]
9.53 [0.275]
9.53 [0.225]
3.81 [0.150]
2.54 [0.100]
R
A
B
P
C
a
S
N
D
Z
b
T
M
E
Y
d
c
U
L
F
X
V
W
K
G
J
H
0.64 [0.025]
1.27 [0.050]
3.81 [0.150]
5.08 [0.200]
6.35 [0.250]
7.62 [0.300]
10.16 [0.400]
9.53 [0.375]
9.53 [0.275]
6.35 [0.250]
3.81 [0.150]
2.54 [0.100]

## 21-01/21-35

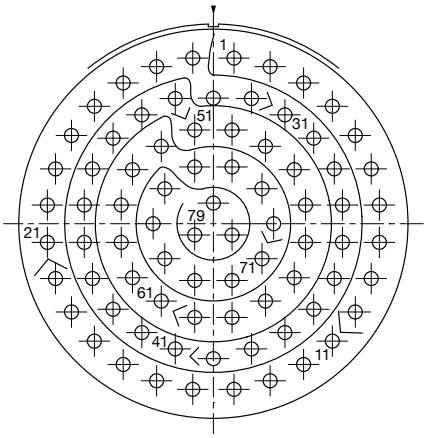


| Contact Position | Location | |
|---|---|---|
| | X Axis | Y Axis |
| 1 | +0.053 | +0.426 |
| 2 | +0.146 | +0.404 |
| 3 | +0.232 | +0.362 |
| 4 | +0.306 | +0.302 |
| 5 | +0.365 | +0.227 |
| 6 | +0.406 | +0.141 |
| 7 | +0.427 | +0.048 |
| 8 | +0.427 | -0.048 |
| 9 | +0.406 | -0.141 |
| 10 | +0.365 | -0.227 |
| 11 | +0.306 | -0.302 |
| 12 | +0.232 | -0.362 |
| 13 | +0.146 | -0.404 |
| 14 | +0.053 | -0.426 |
| 15 | -0.053 | -0.426 |
| 16 | -0.146 | -0.404 |
| 17 | -0.232 | -0.362 |
| 18 | -0.306 | -0.302 |
| 19 | -0.365 | -0.227 |
| 20 | -0.406 | -0.141 |
| 21 | -0.427 | -0.048 |
| 22 | -0.427 | +0.048 |
| 23 | -0.406 | +0.141 |
| 24 | -0.365 | +0.227 |
| 25 | -0.306 | +0.302 |
| 26 | -0.232 | +0.362 |
| 27 | -0.146 | +0.404 |

| Contact Position | Location | |
|---|---|---|
| | X Axis | Y Axis |
| 28 | -0.053 | +0.426 |
| 29 | +0.000 | +0.323 |
| 30 | +0.098 | +0.322 |
| 31 | +0.184 | +0.280 |
| 32 | +0.258 | +0.220 |
| 33 | +0.311 | +0.141 |
| 34 | +0.332 | +0.048 |
| 35 | +0.332 | -0.048 |
| 36 | +0.311 | -0.141 |
| 37 | +0.258 | -0.220 |
| 38 | +0.184 | -0.280 |
| 39 | +0.098 | -0.322 |
| 40 | +0.000 | -0.347 |
| 41 | -0.098 | -0.322 |
| 42 | -0.184 | -0.280 |
| 43 | -0.258 | -0.220 |
| 44 | -0.311 | -0.141 |
| 45 | -0.332 | -0.048 |
| 46 | -0.332 | +0.048 |
| 47 | -0.311 | +0.141 |
| 48 | -0.258 | +0.220 |
| 49 | -0.184 | +0.280 |
| 50 | -0.098 | +0.322 |
| 51 | -0.048 | +0.241 |
| 52 | +0.048 | +0.241 |
| 53 | +0.134 | +0.199 |
| 54 | +0.208 | +0.139 |

| Contact Position | Location | |
|---|---|---|
| | X Axis | Y Axis |
| 55 | +0.237 | +0.048 |
| 56 | +0.237 | -0.048 |
| 57 | +0.208 | -0.139 |
| 58 | +0.134 | -0.199 |
| 59 | +0.048 | -0.241 |
| 60 | -0.048 | -0.241 |
| 61 | -0.134 | -0.199 |
| 62 | -0.208 | -0.139 |
| 63 | -0.237 | -0.048 |
| 64 | -0.237 | +0.048 |
| 65 | -0.208 | +0.139 |
| 66 | -0.134 | +0.199 |
| 67 | -0.048 | +0.146 |
| 68 | +0.048 | +0.146 |
| 69 | +0.125 | +0.090 |
| 70 | +0.155 | +0.000 |
| 71 | +0.125 | -0.090 |
| 72 | +0.048 | -0.146 |
| 73 | -0.048 | -0.146 |
| 74 | -0.125 | -0.090 |
| 75 | -0.155 | -0.000 |
| 76 | -0.125 | +0.090 |
| 77 | +0.000 | +0.053 |
| 78 | +0.048 | -0.029 |
| 79 | -0.048 | -0.029 |
| — | — | — |

## 21-39

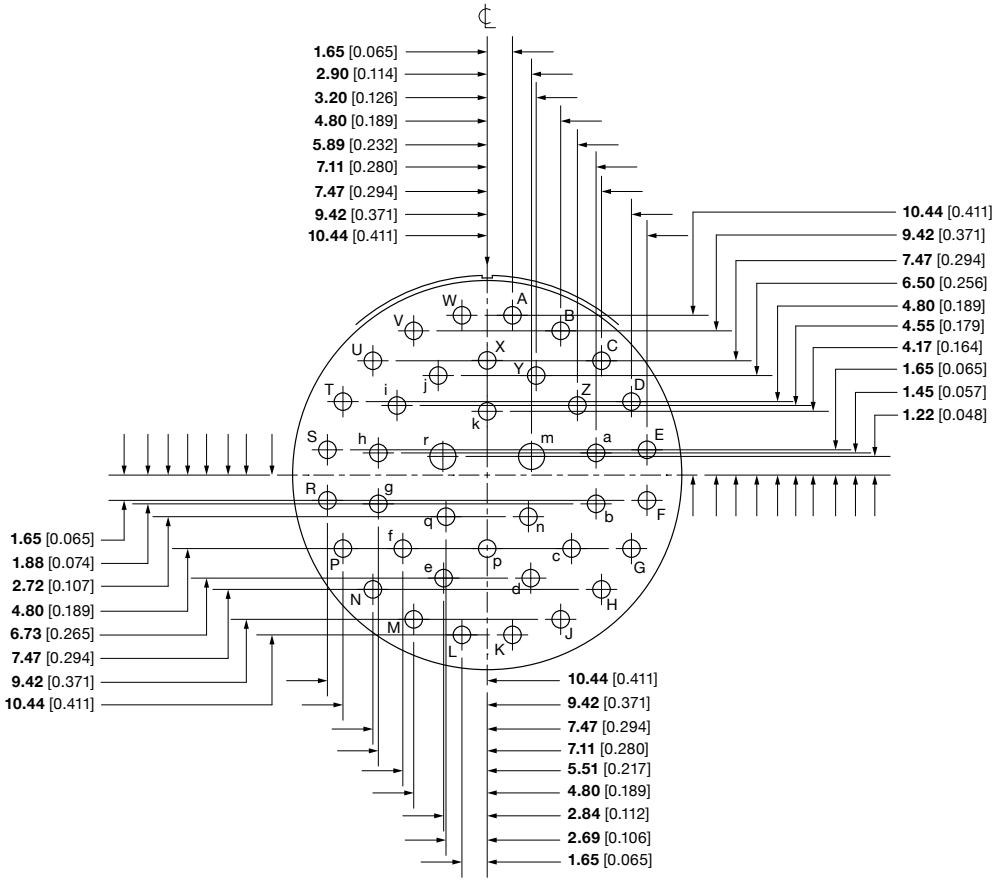
1.65 [0.065]
2.90 [0.114]
3.20 [0.126]
4.80 [0.189]
5.89 [0.232]
7.11 [0.280]
7.47 [0.294]
9.42 [0.371]
10.44 [0.411]
10.44 [0.411]
9.42 [0.371]
7.47 [0.294]
6.50 [0.256]
4.80 [0.189]
4.55 [0.179]
4.17 [0.164]
1.65 [0.065]
1.45 [0.057]
1.22 [0.048]
1.65 [0.065]
1.88 [0.074]
2.72 [0.107]
4.80 [0.189]
6.73 [0.265]
7.47 [0.294]
9.42 [0.371]
10.44 [0.411]
10.44 [0.411]
9.42 [0.371]
7.47 [0.294]
7.11 [0.280]
5.51 [0.217]
4.80 [0.189]
2.84 [0.112]
2.69 [0.106]
1.65 [0.065]

## 21-41

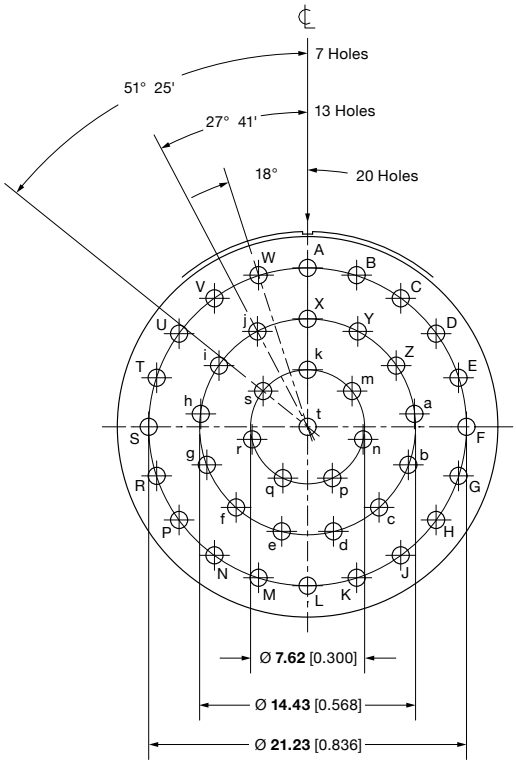
7 Holes
51° 25'
13 Holes
27° 41'
18°
20 Holes
Ø 7.62 [0.300]
Ø 14.43 [0.568]
Ø 21.23 [0.836]

## 23-21

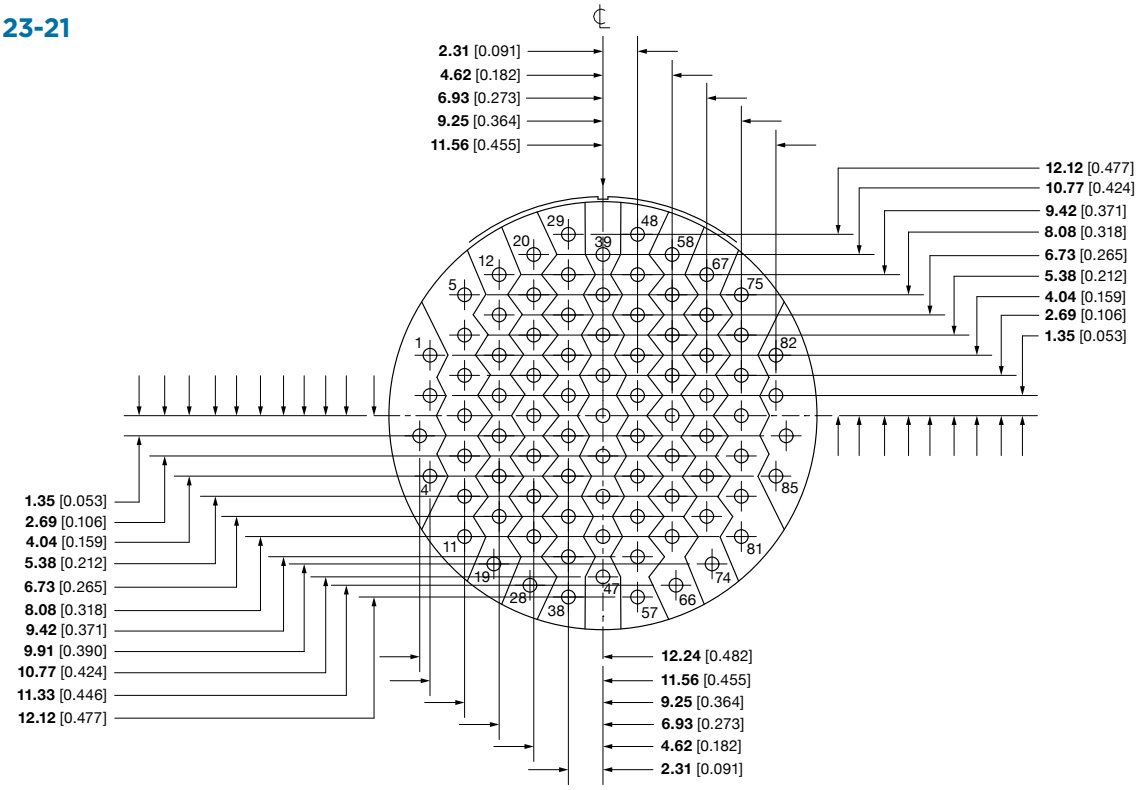
2.31 [0.091]
4.62 [0.182]
6.93 [0.273]
9.25 [0.364]
11.56 [0.455]
12.12 [0.477]
10.77 [0.424]
9.42 [0.371]
8.08 [0.318]
6.73 [0.265]
5.38 [0.212]
4.04 [0.159]
2.69 [0.106]
1.35 [0.053]
1.35 [0.053]
2.69 [0.106]
4.04 [0.159]
5.38 [0.212]
6.73 [0.265]
8.08 [0.318]
9.42 [0.371]
9.91 [0.390]
10.77 [0.424]
11.33 [0.446]
12.12 [0.477]
12.24 [0.482]
11.56 [0.455]
9.25 [0.364]
6.93 [0.273]
4.62 [0.182]
2.31 [0.091]
1
4
5
11
12
19
20
28
29
38
39
47
48
57
58
66
67
74
75
81
82
85

## 23-21

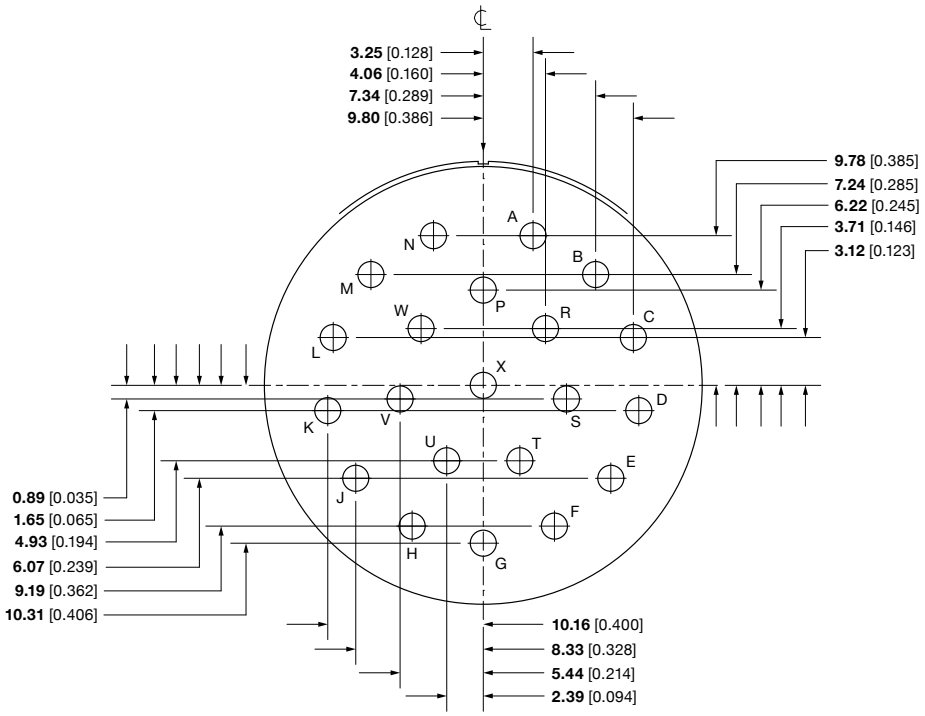
3.25 [0.128]
4.06 [0.160]
7.34 [0.289]
9.80 [0.386]
9.78 [0.385]
7.24 [0.285]
6.22 [0.245]
3.71 [0.146]
3.12 [0.123]
0.89 [0.035]
1.65 [0.065]
4.93 [0.194]
6.07 [0.239]
9.19 [0.362]
10.31 [0.406]
10.16 [0.400]
8.33 [0.328]
5.44 [0.214]
2.39 [0.094]
A
B
C
D
E
F
G
H
J
K
L
M
N
P
R
S
T
U
V
W
X

## 23-32

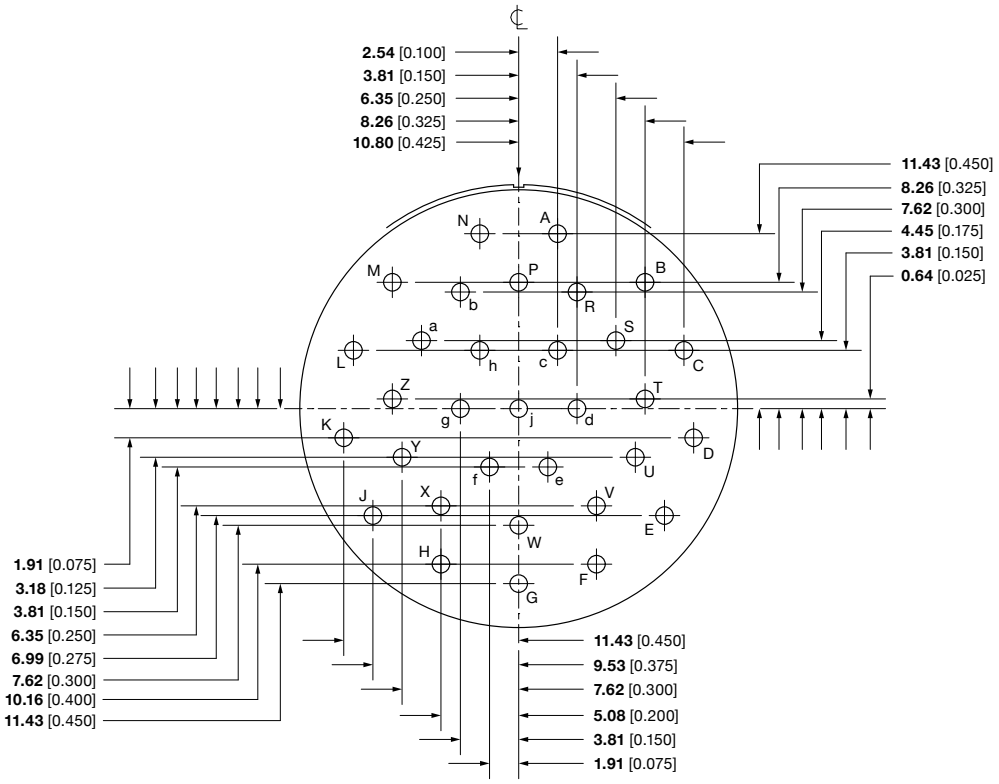
2.54 [0.100]
3.81 [0.150]
6.35 [0.250]
8.26 [0.325]
10.80 [0.425]
11.43 [0.450]
8.26 [0.325]
7.62 [0.300]
4.45 [0.175]
3.81 [0.150]
0.64 [0.025]
N
A
M
P
B
b
R
a
S
L
h
c
C
Z
T
g
j
d
K
Y
D
f
e
U
J
X
V
E
W
H
F
G
1.91 [0.075]
3.18 [0.125]
3.81 [0.150]
6.35 [0.250]
6.99 [0.275]
7.62 [0.300]
10.16 [0.400]
11.43 [0.450]
11.43 [0.450]
9.53 [0.375]
7.62 [0.300]
5.08 [0.200]
3.81 [0.150]
1.91 [0.075]

## 23-34

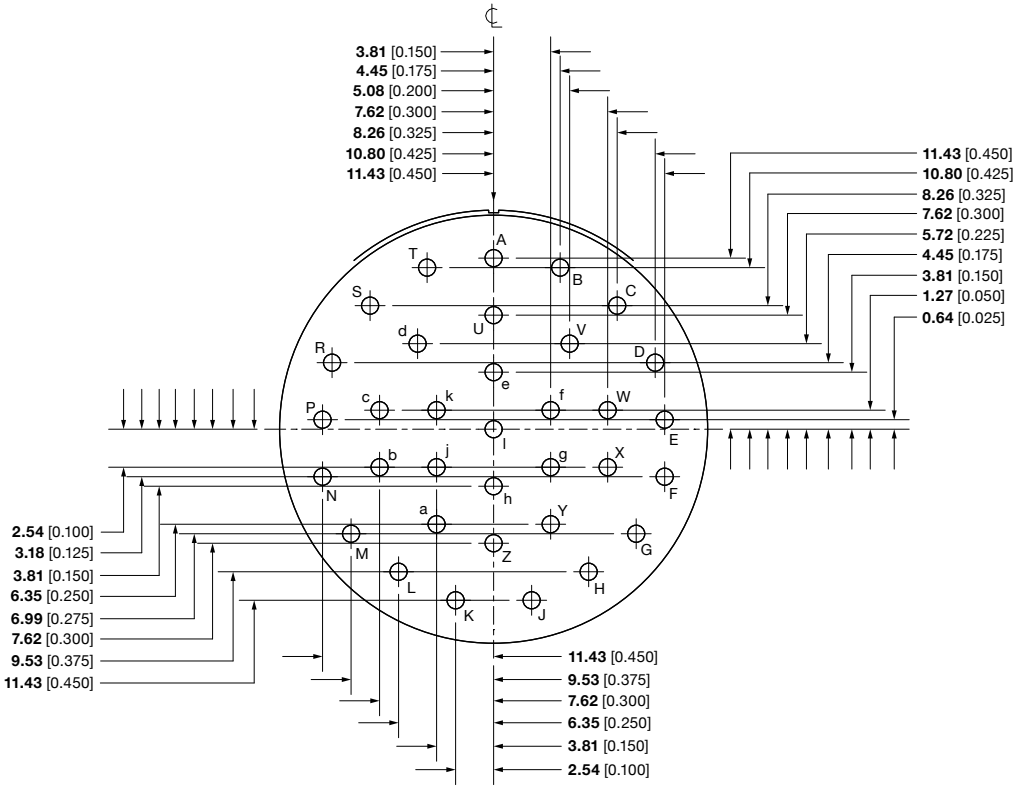
3.81 [0.150]
4.45 [0.175]
5.08 [0.200]
7.62 [0.300]
8.26 [0.325]
10.80 [0.425]
11.43 [0.450]
11.43 [0.450]
10.80 [0.425]
8.26 [0.325]
7.62 [0.300]
5.72 [0.225]
4.45 [0.175]
3.81 [0.150]
1.27 [0.050]
0.64 [0.025]
T
A
B
S
C
U
d
V
R
D
e
P
c
k
f
W
l
E
b
j
g
X
N
h
F
a
Y
M
Z
G
L
H
K
J
2.54 [0.100]
3.18 [0.125]
3.81 [0.150]
6.35 [0.250]
6.99 [0.275]
7.62 [0.300]
9.53 [0.375]
11.43 [0.450]
11.43 [0.450]
9.53 [0.375]
7.62 [0.300]
6.35 [0.250]
3.81 [0.150]
2.54 [0.100]

## 23-01/23-35

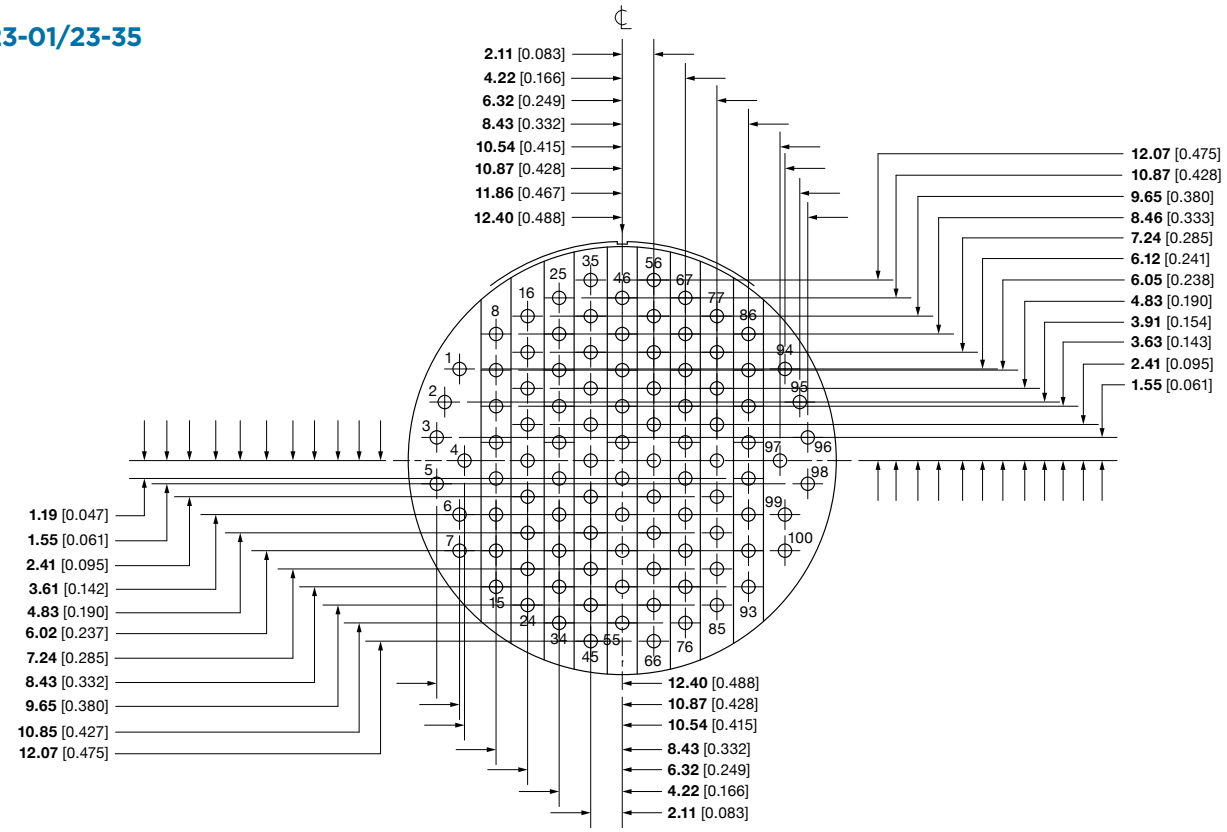


## 23-36

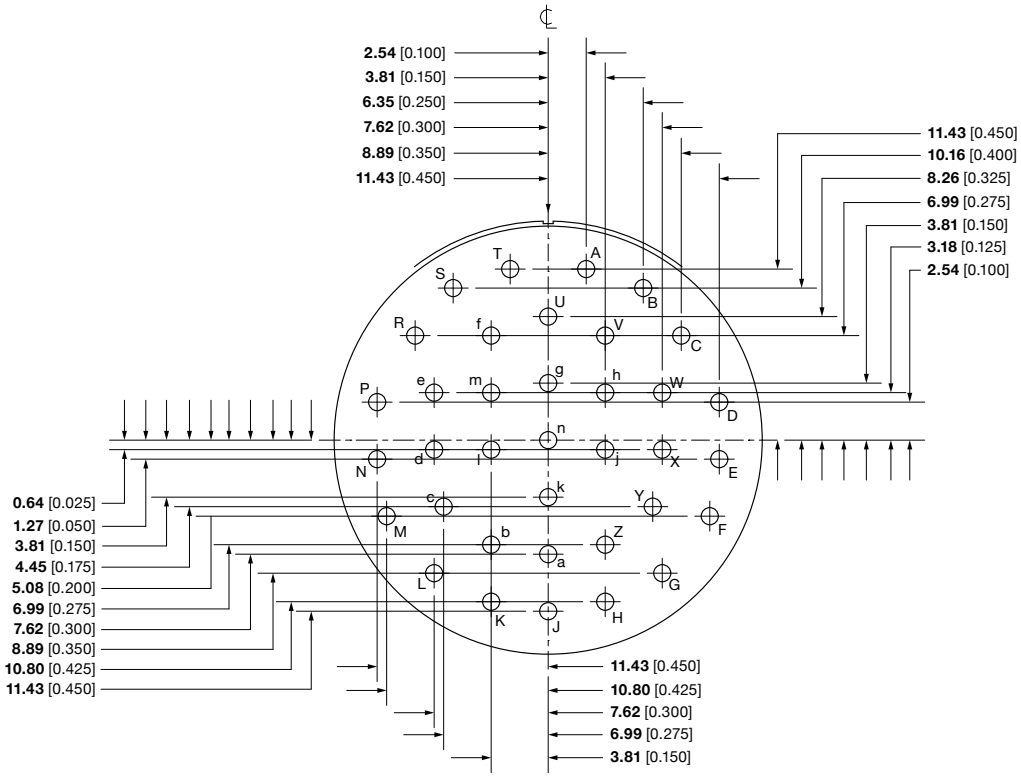

## 23-53

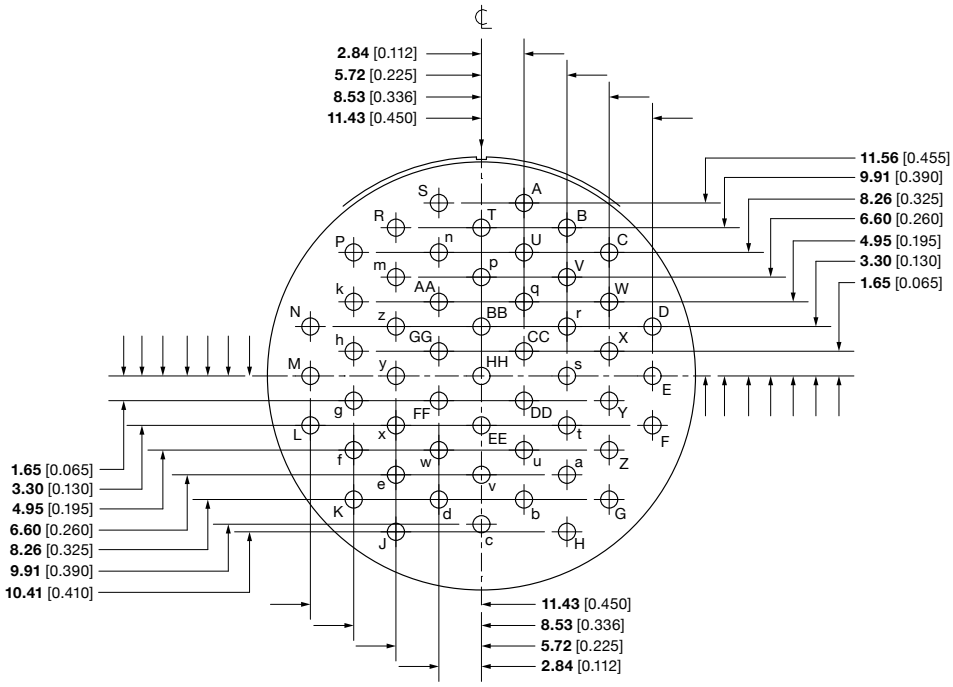
2.84 [0.112]
5.72 [0.225]
8.53 [0.336]
11.43 [0.450]
11.56 [0.455]
9.91 [0.390]
8.26 [0.325]
6.60 [0.260]
4.95 [0.195]
3.30 [0.130]
1.65 [0.065]
1.65 [0.065]
3.30 [0.130]
4.95 [0.195]
6.60 [0.260]
8.26 [0.325]
9.91 [0.390]
10.41 [0.410]
11.43 [0.450]
8.53 [0.336]
5.72 [0.225]
2.84 [0.112]

## 23-55

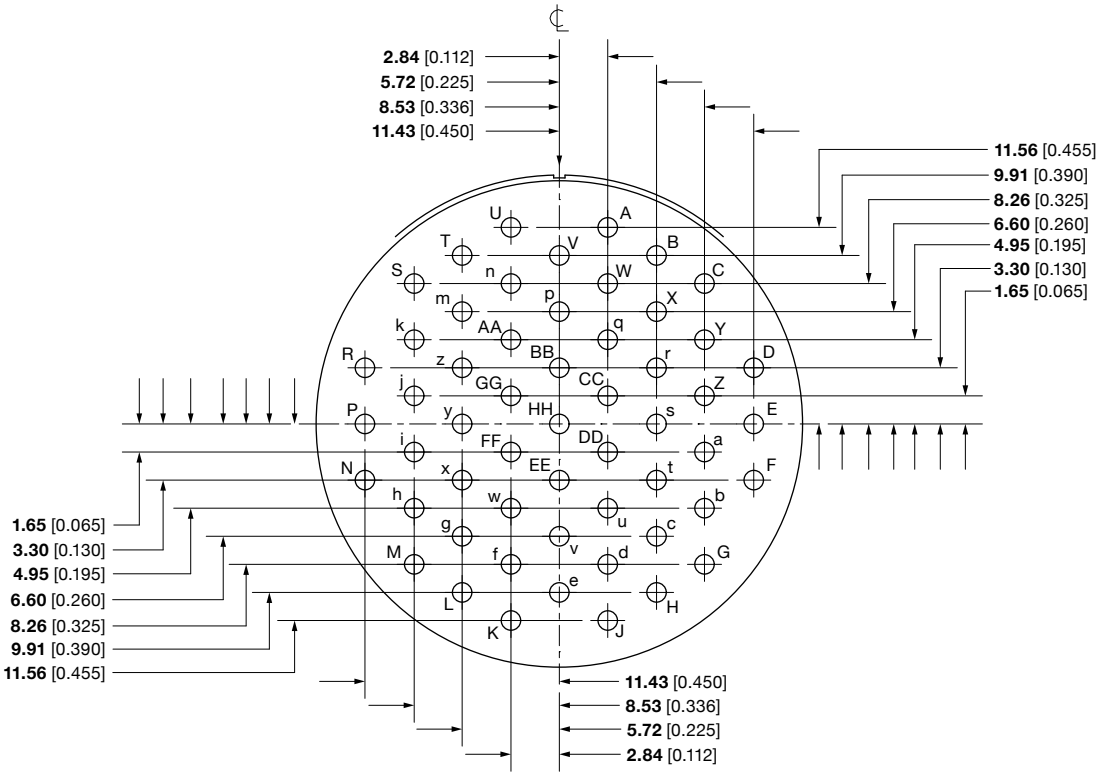
2.84 [0.112]
5.72 [0.225]
8.53 [0.336]
11.43 [0.450]
11.56 [0.455]
9.91 [0.390]
8.26 [0.325]
6.60 [0.260]
4.95 [0.195]
3.30 [0.130]
1.65 [0.065]
1.65 [0.065]
3.30 [0.130]
4.95 [0.195]
6.60 [0.260]
8.26 [0.325]
9.91 [0.390]
11.56 [0.455]
11.43 [0.450]
8.53 [0.336]
5.72 [0.225]
2.84 [0.112]

## 23-97

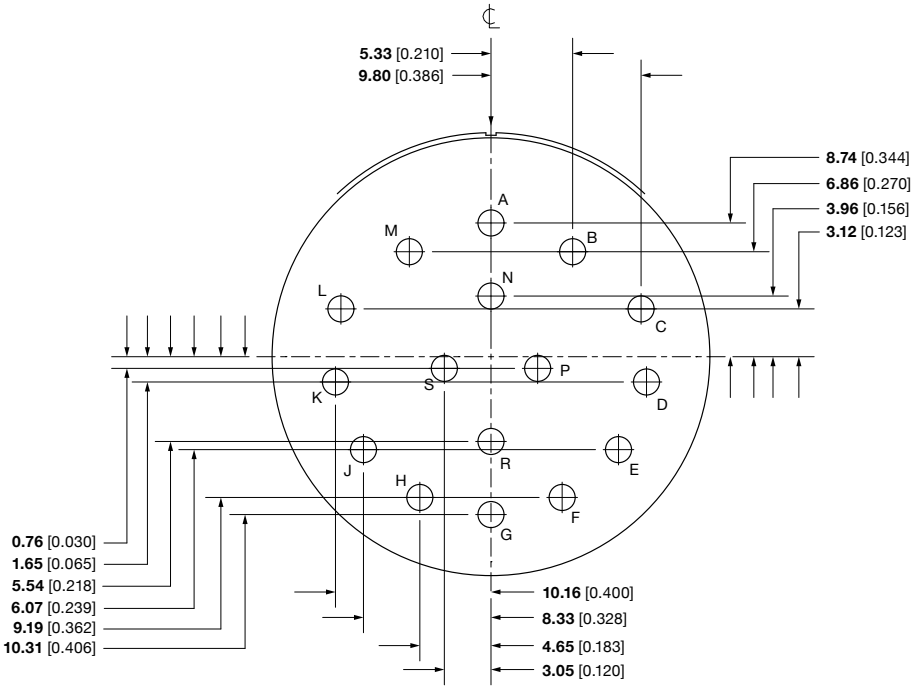
5.33 [0.210]
9.80 [0.386]
8.74 [0.344]
6.86 [0.270]
3.96 [0.156]
3.12 [0.123]
A
B
C
D
E
F
G
H
J
K
L
M
N
P
R
S
0.76 [0.030]
1.65 [0.065]
5.54 [0.218]
6.07 [0.239]
9.19 [0.362]
10.31 [0.406]
10.16 [0.400]
8.33 [0.328]
4.65 [0.183]
3.05 [0.120]

## 23-99

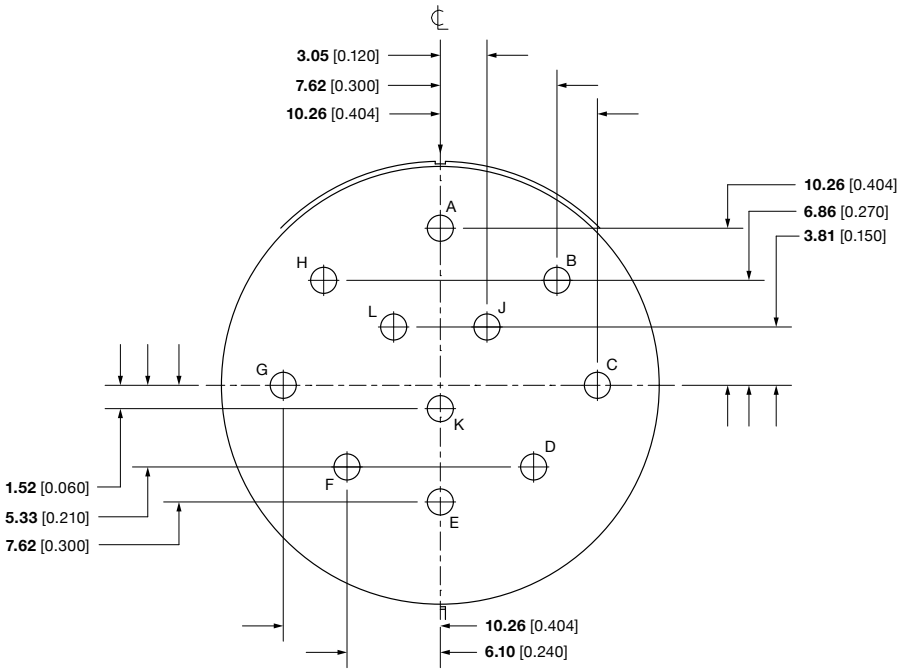
3.05 [0.120]
7.62 [0.300]
10.26 [0.404]
10.26 [0.404]
6.86 [0.270]
3.81 [0.150]
A
B
C
D
E
F
G
H
J
K
L
1.52 [0.060]
5.33 [0.210]
7.62 [0.300]
10.26 [0.404]
6.10 [0.240]

## 25-02

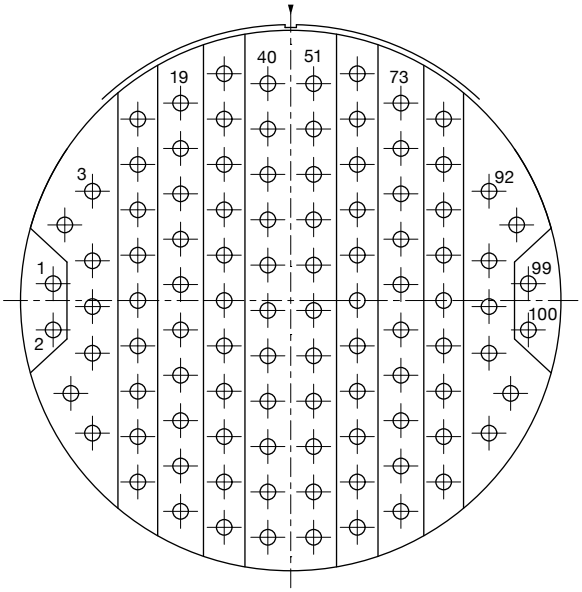

| Contact Position | Location | |
|---|---|---|
| | X Axis | Y Axis |
| 1 | -0.550 | +0.039 |
| 2 | -0.550 | -0.068 |
| 3 | -0.459 | +0.253 |
| 4 | -0.523 | +0.175 |
| 5 | -0.459 | +0.092 |
| 6 | -0.459 | -0.014 |
| 7 | -0.459 | -0.122 |
| 8 | -0.509 | -0.215 |
| 9 | -0.459 | -0.307 |
| 10 | -0.354 | +0.420 |
| 11 | -0.354 | +0.315 |
| 12 | -0.354 | +0.210 |
| 13 | -0.354 | +0.105 |
| 14 | -0.354 | +0.000 |
| 15 | -0.354 | -0.105 |
| 16 | -0.354 | -0.210 |
| 17 | -0.354 | -0.315 |
| 18 | -0.354 | -0.420 |
| 19 | -0.255 | +0.457 |
| 20 | -0.255 | +0.352 |
| 21 | -0.255 | +0.247 |
| 22 | -0.255 | +0.142 |
| 23 | -0.255 | +0.037 |
| 24 | -0.255 | -0.068 |
| 25 | -0.255 | -0.173 |
| 26 | -0.255 | -0.278 |
| 27 | -0.255 | -0.383 |
| 28 | -0.255 | -0.488 |
| 29 | -0.154 | +0.525 |
| 30 | -0.154 | +0.420 |
| 31 | -0.154 | +0.315 |
| 32 | -0.154 | +0.210 |
| 33 | -0.154 | +0.105 |
| 34 | -0.154 | +0.000 |

| Contact Position | Location | |
|---|---|---|
| | X Axis | Y Axis |
| 35 | -0.154 | -0.105 |
| 36 | -0.154 | -0.210 |
| 37 | -0.154 | -0.315 |
| 38 | -0.154 | -0.420 |
| 39 | -0.154 | -0.525 |
| 40 | -0.053 | +0.502 |
| 41 | -0.053 | +0.397 |
| 42 | -0.053 | +0.292 |
| 43 | -0.053 | +0.187 |
| 44 | -0.053 | +0.082 |
| 45 | -0.053 | -0.023 |
| 46 | -0.053 | -0.128 |
| 47 | -0.053 | -0.233 |
| 48 | -0.053 | -0.338 |
| 49 | -0.053 | -0.443 |
| 50 | -0.053 | -0.548 |
| 51 | +0.053 | +0.502 |
| 52 | +0.053 | +0.397 |
| 53 | +0.053 | +0.292 |
| 54 | +0.053 | +0.187 |
| 55 | +0.053 | +0.082 |
| 56 | +0.053 | -0.023 |
| 57 | +0.053 | -0.128 |
| 58 | +0.053 | -0.233 |
| 59 | +0.053 | -0.338 |
| 60 | +0.053 | -0.443 |
| 61 | +0.053 | -0.548 |
| 62 | +0.154 | +0.525 |
| 63 | +0.154 | +0.420 |
| 64 | +0.154 | +0.315 |
| 65 | +0.154 | +0.210 |
| 66 | +0.154 | +0.105 |
| 67 | +0.154 | +0.000 |
| 68 | +0.154 | -0.105 |

| Contact Position | Location | |
|---|---|---|
| | X Axis | Y Axis |
| 69 | +0.154 | -0.210 |
| 70 | +0.154 | -0.315 |
| 71 | +0.154 | -0.420 |
| 72 | +0.154 | -0.525 |
| 73 | +0.255 | +0.457 |
| 74 | +0.255 | +0.352 |
| 75 | +0.255 | +0.247 |
| 76 | +0.255 | +0.142 |
| 77 | +0.255 | +0.037 |
| 78 | +0.255 | -0.068 |
| 79 | +0.255 | -0.173 |
| 80 | +0.255 | -0.278 |
| 81 | +0.255 | -0.383 |
| 82 | +0.255 | -0.488 |
| 83 | +0.354 | +0.420 |
| 84 | +0.354 | +0.315 |
| 85 | +0.354 | +0.210 |
| 86 | +0.354 | +0.105 |
| 87 | +0.354 | +0.000 |
| 88 | +0.354 | -0.105 |
| 89 | +0.354 | -0.210 |
| 90 | +0.354 | -0.315 |
| 91 | +0.354 | -0.420 |
| 92 | +0.459 | +0.253 |
| 93 | +0.523 | +0.175 |
| 94 | +0.459 | +0.092 |
| 95 | +0.459 | -0.014 |
| 96 | +0.459 | -0.122 |
| 97 | +0.509 | -0.215 |
| 98 | +0.459 | -0.037 |
| 99 | +0.550 | +0.039 |
| 100 | +0.550 | -0.068 |

## 25-04

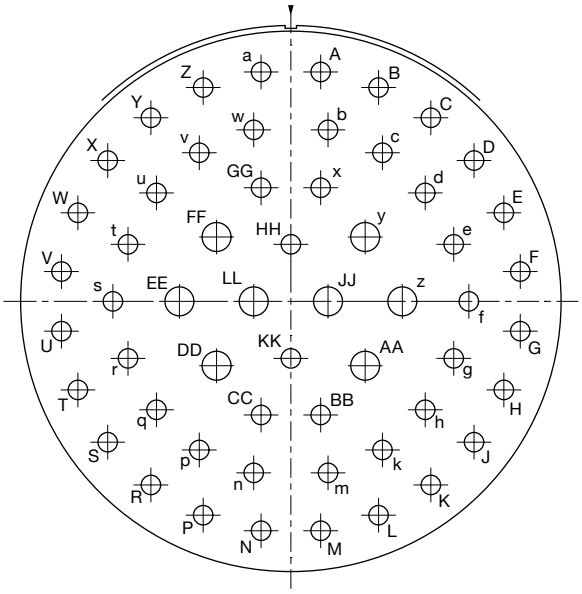


| Contact Position | Location | |
|---|---|---|
| | X Axis | Y Axis |
| A | +0.069 | +0.531 |
| B | +0.203 | +0.495 |
| C | +0.324 | +0.425 |
| D | +0.424 | +0.326 |
| E | +0.493 | +0.205 |
| F | +0.531 | +0.069 |
| G | +0.531 | -0.069 |
| H | +0.493 | -0.205 |
| J | +0.424 | -0.326 |
| K | +0.324 | -0.425 |
| L | +0.203 | -0.495 |
| M | +0.069 | -0.531 |
| N | -0.069 | -0.531 |
| P | -0.203 | -0.495 |
| R | -0.324 | -0.425 |
| S | -0.424 | -0.326 |
| T | -0.493 | -0.205 |
| U | -0.531 | -0.069 |
| V | -0.531 | +0.069 |

| Contact Position | Location | |
|---|---|---|
| | X Axis | Y Axis |
| W | -0.493 | +0.205 |
| X | -0.424 | +0.326 |
| Y | -0.324 | +0.425 |
| Z | -0.203 | +0.495 |
| a | -0.069 | +0.531 |
| b | +0.806 | +0.397 |
| c | +0.212 | +0.344 |
| d | +0.311 | +0.251 |
| e | +0.377 | +0.132 |
| f | +0.412 | +0.000 |
| g | +0.377 | -0.132 |
| h | +0.311 | -0.251 |
| k | +0.212 | -0.344 |
| m | +0.086 | -0.397 |
| n | -0.086 | -0.397 |
| p | -0.212 | -0.344 |
| q | -0.311 | -0.251 |
| r | -0.377 | -0.132 |
| s | -0.412 | +0.000 |

| Contact Position | Location | |
|---|---|---|
| | X Axis | Y Axis |
| t | -0.377 | +0.132 |
| u | -0.311 | +0.251 |
| v | -0.212 | +0.344 |
| w | -0.086 | +0.397 |
| x | +0.069 | +0.263 |
| y | +0.172 | +0.149 |
| z | +0.258 | +0.000 |
| AA | +0.172 | -0.149 |
| BB | +0.069 | -0.263 |
| CC | -0.069 | -0.263 |
| DD | -0.172 | -0.149 |
| EE | -0.258 | +0.000 |
| FF | -0.172 | +0.149 |
| GG | -0.069 | +0.263 |
| HH | +0.000 | +0.132 |
| JJ | +0.086 | +0.000 |
| KK | +0.000 | -0.132 |
| LL | -0.086 | +0.000 |

## 25-19

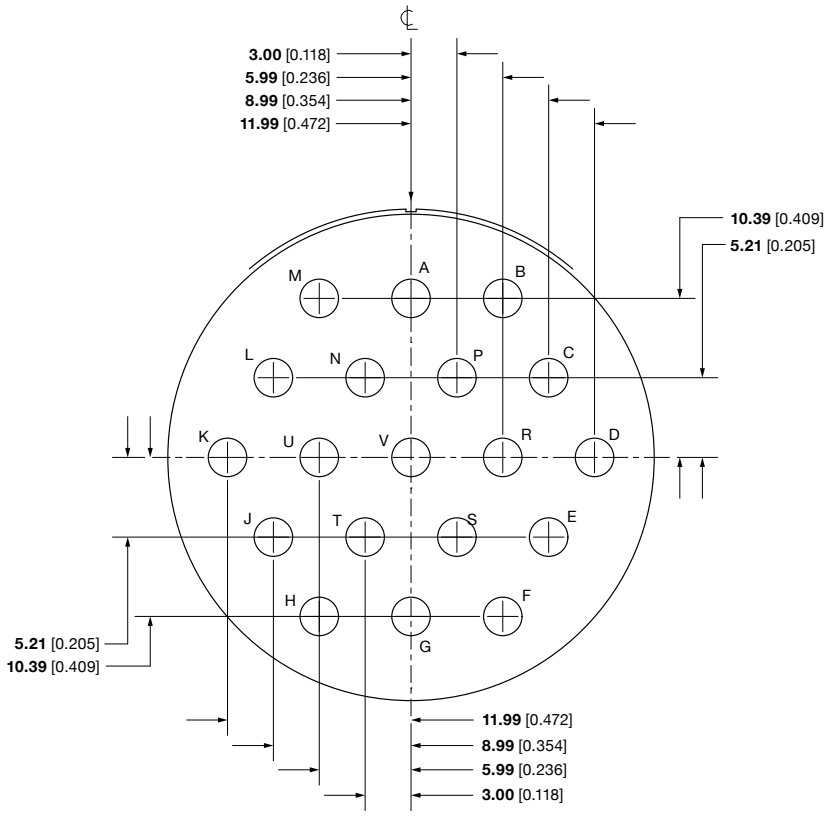
3.00 [0.118]
5.99 [0.236]
8.99 [0.354]
11.99 [0.472]
10.39 [0.409]
5.21 [0.205]
M
A
B
L
N
P
C
K
U
V
R
D
J
T
S
E
H
F
G
5.21 [0.205]
10.39 [0.409]
11.99 [0.472]
8.99 [0.354]
5.99 [0.236]
3.00 [0.118]

## 25-24

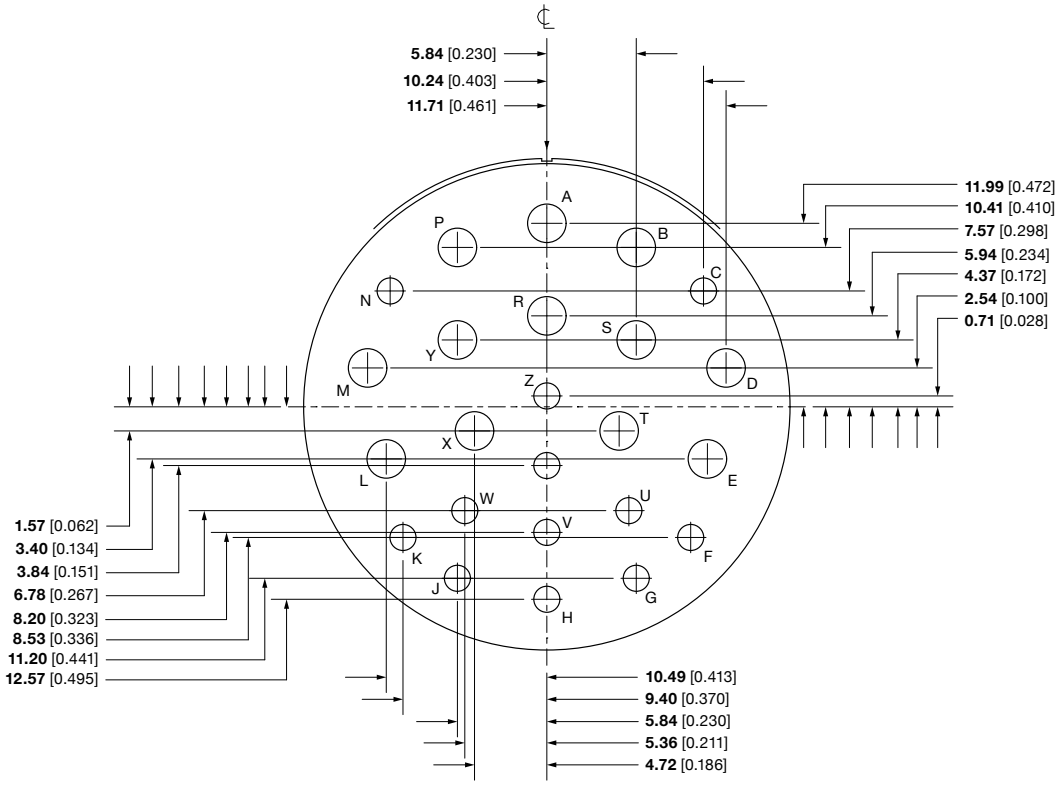
5.84 [0.230]
10.24 [0.403]
11.71 [0.461]
11.99 [0.472]
10.41 [0.410]
7.57 [0.298]
5.94 [0.234]
4.37 [0.172]
2.54 [0.100]
0.71 [0.028]
A
P
B
C
N
R
S
Y
M
Z
D
T
X
L
E
W
U
V
K
F
J
G
H
1.57 [0.062]
3.40 [0.134]
3.84 [0.151]
6.78 [0.267]
8.20 [0.323]
8.53 [0.336]
11.20 [0.441]
12.57 [0.495]
10.49 [0.413]
9.40 [0.370]
5.84 [0.230]
5.36 [0.211]
4.72 [0.186]

## 25-29

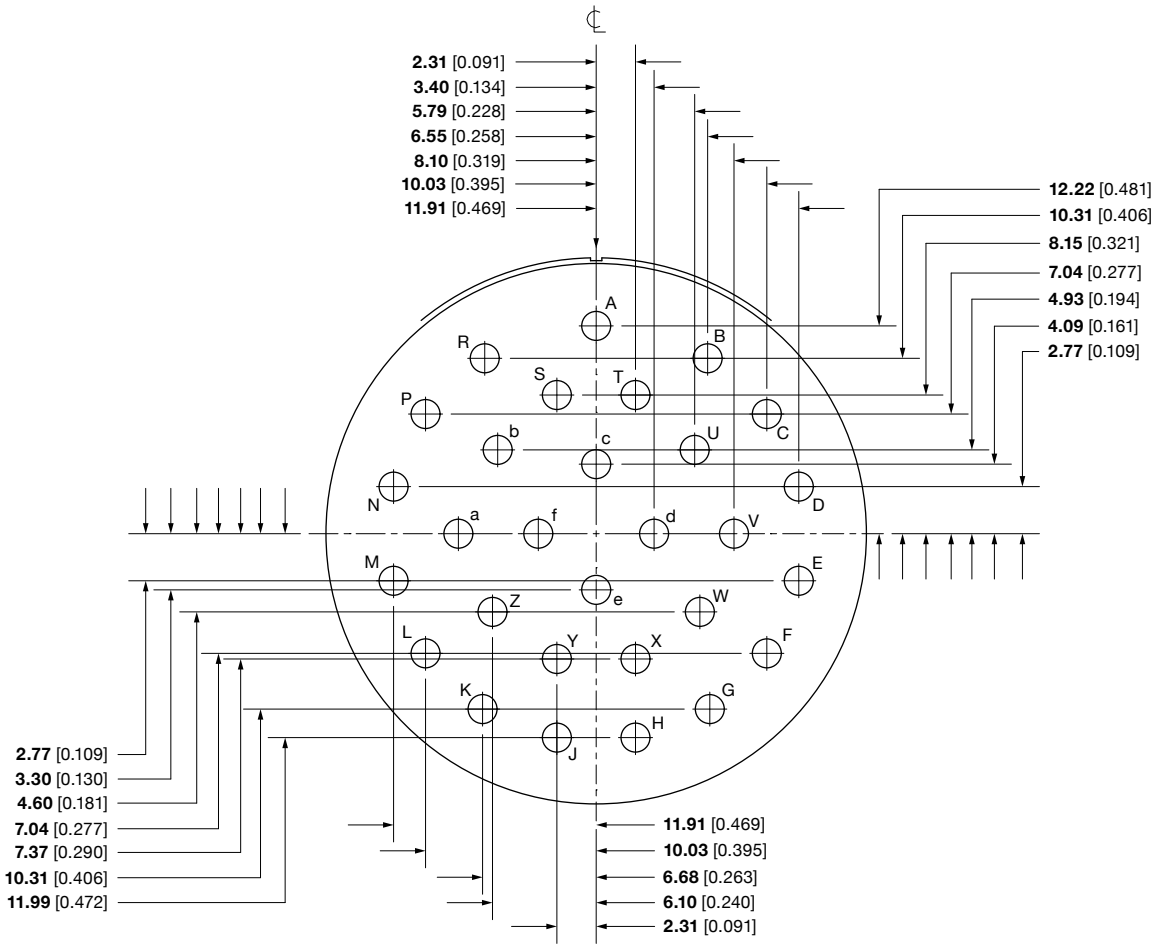
2.31 [0.091]
3.40 [0.134]
5.79 [0.228]
6.55 [0.258]
8.10 [0.319]
10.03 [0.395]
11.91 [0.469]
12.22 [0.481]
10.31 [0.406]
8.15 [0.321]
7.04 [0.277]
4.93 [0.194]
4.09 [0.161]
2.77 [0.109]
A
B
R
S
T
P
C
b
c
U
N
D
a
f
d
V
M
E
e
W
Z
L
Y
X
F
K
G
H
J
2.77 [0.109]
3.30 [0.130]
4.60 [0.181]
7.04 [0.277]
7.37 [0.290]
10.31 [0.406]
11.99 [0.472]
11.91 [0.469]
10.03 [0.395]
6.68 [0.263]
6.10 [0.240]
2.31 [0.091]

## 25-01, 25-35

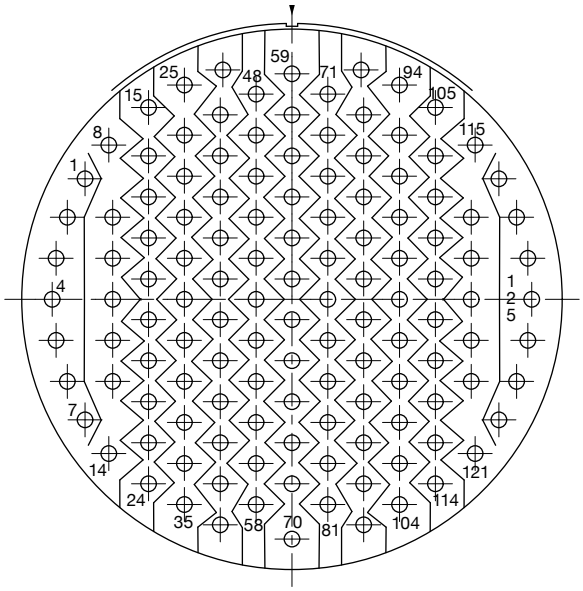


| Contact Position | Location | |
|---|---|---|
| | X Axis | Y Axis |
| 1 | -0.479 | +0.279 |
| 2 | -0.520 | +0.190 |
| 3 | -0.546 | +0.095 |
| 4 | -0.555 | +0.000 |
| 5 | -0.546 | -0.095 |
| 6 | -0.520 | -0.190 |
| 7 | -0.479 | -0.279 |
| 8 | -0.424 | +0.357 |
| 9 | -0.415 | +0.190 |
| 10 | -0.415 | +0.095 |

| Contact Position | Location | |
|---|---|---|
| | X Axis | Y Axis |
| 11 | -0.415 | +0.000 |
| 12 | -0.415 | -0.095 |
| 13 | -0.415 | -0.190 |
| 14 | -0.424 | -0.357 |
| 15 | -0.332 | +0.444 |
| 16 | -0.332 | +0.332 |
| 17 | -0.332 | -0.237 |
| 18 | -0.332 | +0.142 |
| 19 | -0.332 | +0.047 |
| 20 | -0.332 | -0.047 |

| Contact Position | Location | |
|---|---|---|
| | X Axis | Y Axis |
| 21 | -0.332 | -0.142 |
| 22 | -0.332 | -0.237 |
| 23 | -0.332 | -0.332 |
| 24 | -0.332 | -0.427 |
| 25 | -0.249 | +0.496 |
| 26 | -0.249 | +0.380 |
| 27 | -0.249 | +0.285 |
| 28 | -0.249 | +0.190 |
| 29 | -0.249 | +0.095 |
| 30 | -0.249 | +0.000 |

| Contact Position | Location | |
|---|---|---|
| | X Axis | Y Axis |
| 31 | -0.249 | -0.095 |
| 32 | -0.249 | -0.190 |
| 33 | -0.249 | -0.285 |
| 34 | -0.249 | -0.380 |
| 35 | -0.249 | -0.475 |
| 36 | -0.160 | +0.531 |
| 37 | -0.166 | +0.427 |
| 38 | -0.166 | +0.332 |
| 39 | -0.166 | +0.237 |
| 40 | -0.166 | +0.142 |
| 41 | -0.166 | +0.047 |
| 42 | -0.166 | -0.047 |
| 43 | -0.166 | -0.142 |
| 44 | -0.166 | -0.237 |
| 45 | -0.166 | -0.332 |
| 46 | -0.166 | -0.427 |
| 47 | -0.166 | -0.522 |
| 48 | -0.083 | +0.475 |
| 49 | -0.083 | +0.380 |
| 50 | -0.083 | +0.285 |
| 51 | -0.083 | +0.190 |
| 52 | -0.083 | +0.095 |
| 53 | -0.083 | +0.000 |
| 54 | -0.083 | -0.095 |
| 55 | -0.083 | -0.190 |
| 56 | -0.083 | -0.285 |
| 57 | -0.083 | -0.380 |
| 58 | -0.083 | -0.475 |
| 59 | +0.000 | +0.522 |
| 60 | +0.000 | +0.427 |
| 61 | +0.000 | +0.332 |
| 62 | +0.000 | +0.237 |
| 63 | +0.000 | +0.142 |

| Contact Position | Location | |
|---|---|---|
| | X Axis | Y Axis |
| 64 | +0.000 | +0.047 |
| 65 | +0.000 | -0.047 |
| 66 | +0.000 | -0.142 |
| 67 | +0.000 | -0.237 |
| 68 | +0.000 | -0.332 |
| 69 | +0.000 | -0.427 |
| 70 | +0.000 | -0.555 |
| 71 | +0.083 | +0.475 |
| 72 | +0.083 | +0.380 |
| 73 | +0.083 | +0.285 |
| 74 | +0.083 | +0.190 |
| 75 | +0.083 | +0.095 |
| 76 | +0.083 | +0.000 |
| 77 | +0.083 | -0.095 |
| 78 | +0.083 | -0.190 |
| 79 | +0.083 | -0.285 |
| 80 | +0.083 | -0.380 |
| 81 | +0.083 | -0.475 |
| 82 | +0.160 | +0.531 |
| 83 | +0.166 | +0.427 |
| 84 | +0.166 | +0.332 |
| 85 | +0.166 | +0.237 |
| 86 | +0.166 | +0.142 |
| 87 | +0.166 | +0.047 |
| 88 | +0.166 | -0.047 |
| 89 | +0.166 | -0.142 |
| 90 | +0.166 | -0.237 |
| 91 | +0.166 | -0.332 |
| 92 | +0.166 | -0.427 |
| 93 | +0.249 | -0.522 |
| 94 | +0.249 | +0.496 |
| 95 | +0.249 | +0.380 |
| 96 | +0.249 | +0.285 |

| Contact Position | Location | |
|---|---|---|
| | X Axis | Y Axis |
| 97 | +0.249 | +0.190 |
| 98 | +0.249 | +0.095 |
| 99 | +0.249 | +0.000 |
| 100 | +0.249 | -0.095 |
| 101 | +0.249 | -0.190 |
| 102 | +0.249 | -0.285 |
| 103 | +0.249 | -0.380 |
| 104 | +0.249 | -0.475 |
| 105 | +0.332 | +0.444 |
| 106 | -0.232 | +0.332 |
| 107 | -0.232 | +0.237 |
| 108 | -0.232 | +0.142 |
| 109 | -0.232 | +0.047 |
| 110 | -0.232 | -0.047 |
| 111 | -0.232 | -0.142 |
| 112 | -0.232 | -0.237 |
| 113 | -0.232 | -0.332 |
| 114 | -0.232 | -0.427 |
| 115 | +0.424 | +0.357 |
| 116 | +0.415 | +0.190 |
| 117 | +0.415 | +0.095 |
| 118 | +0.415 | +0.000 |
| 119 | +0.415 | -0.095 |
| 120 | +0.415 | -0.190 |
| 121 | +0.424 | -0.357 |
| 122 | +0.479 | +0.279 |
| 123 | +0.520 | +0.190 |
| 124 | +0.546 | +0.095 |
| 125 | +0.555 | +0.000 |
| 126 | +0.546 | -0.095 |
| 127 | +0.520 | -0.190 |
| 128 | +0.479 | -0.279 |

## 25-37

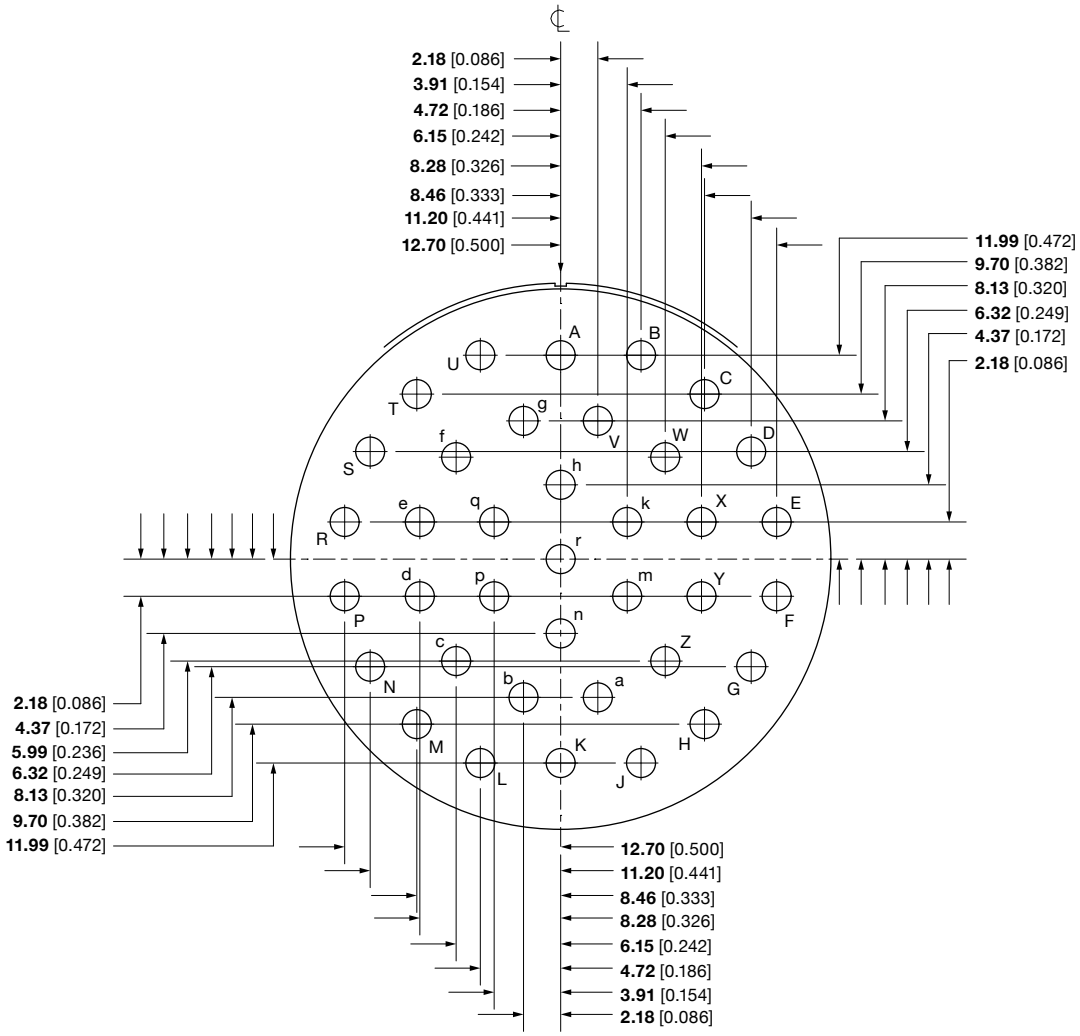
2.18 [0.086]
3.91 [0.154]
4.72 [0.186]
6.15 [0.242]
8.28 [0.326]
8.46 [0.333]
11.20 [0.441]
12.70 [0.500]
11.99 [0.472]
9.70 [0.382]
8.13 [0.320]
6.32 [0.249]
4.37 [0.172]
2.18 [0.086]
A
B
U
C
T
g
V
W
D
f
S
h
e
q
k
X
E
R
r
d
p
m
Y
P
F
n
c
Z
N
b
a
G
M
K
H
L
J
2.18 [0.086]
4.37 [0.172]
5.99 [0.236]
6.32 [0.249]
8.13 [0.320]
9.70 [0.382]
11.99 [0.472]
12.70 [0.500]
11.20 [0.441]
8.46 [0.333]
8.28 [0.326]
6.15 [0.242]
4.72 [0.186]
3.91 [0.154]
2.18 [0.086]

## 25-43

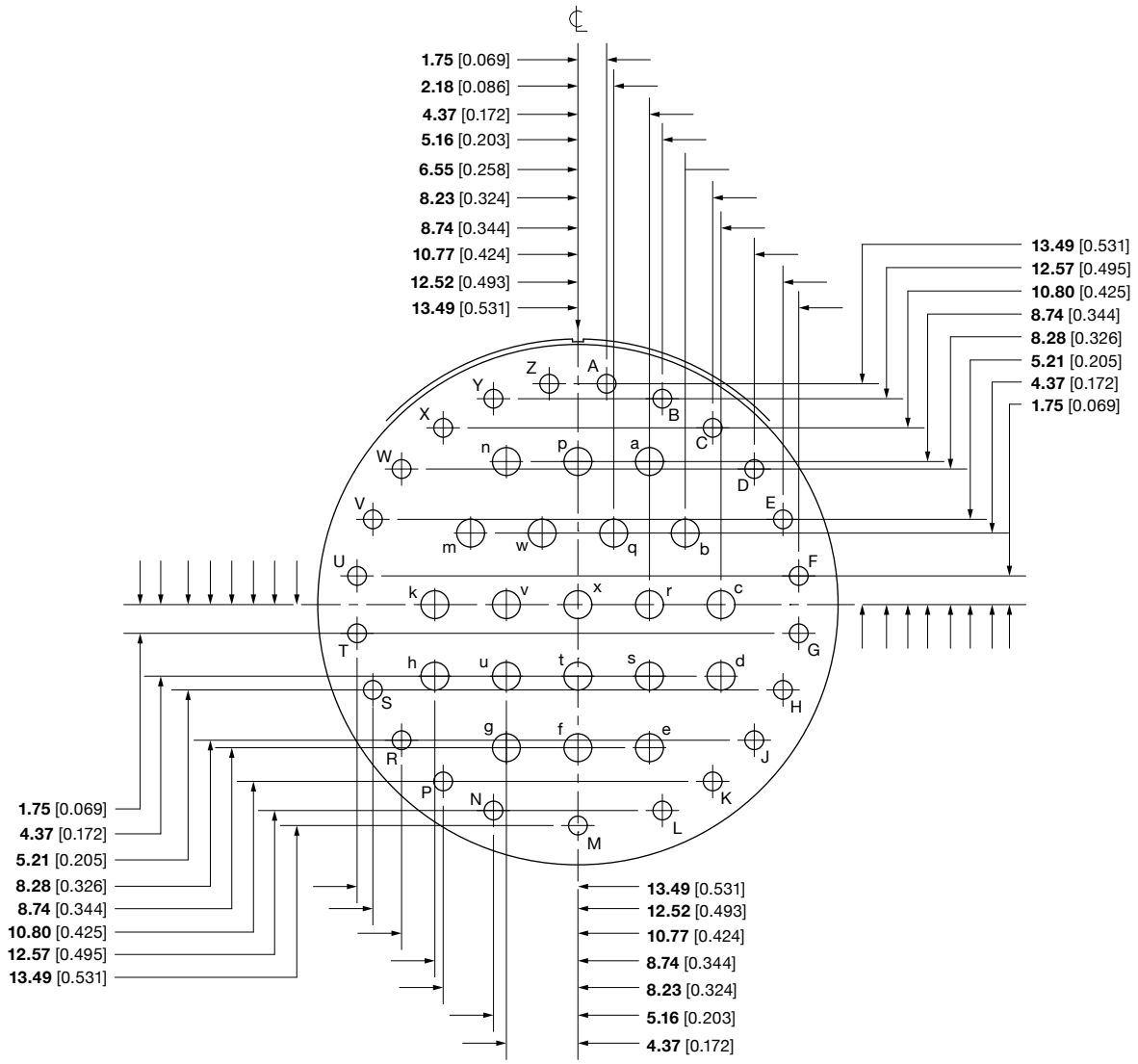
1.75 [0.069]
2.18 [0.086]
4.37 [0.172]
5.16 [0.203]
6.55 [0.258]
8.23 [0.324]
8.74 [0.344]
10.77 [0.424]
12.52 [0.493]
13.49 [0.531]
13.49 [0.531]
12.57 [0.495]
10.80 [0.425]
8.74 [0.344]
8.28 [0.326]
5.21 [0.205]
4.37 [0.172]
1.75 [0.069]
1.75 [0.069]
4.37 [0.172]
5.21 [0.205]
8.28 [0.326]
8.74 [0.344]
10.80 [0.425]
12.57 [0.495]
13.49 [0.531]
13.49 [0.531]
12.52 [0.493]
10.77 [0.424]
8.74 [0.344]
8.23 [0.324]
5.16 [0.203]
4.37 [0.172]
Z A Y B X C W n p a D V E m w q b U F k v x r c T G h u t s d S H g f e R J P N K L M

## 25-61

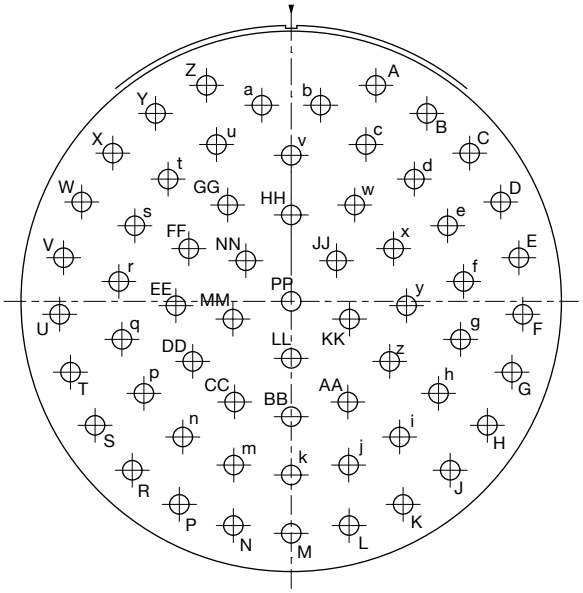


| Contact Position | Location | |
|---|---|---|
| | X Axis | Y Axis |
| A | +0.196 | +0.500 |
| B | +0.314 | +0.435 |
| C | +0.413 | +0.343 |
| D | +0.485 | +0.230 |
| E | +0.527 | +0.101 |
| F | +0.536 | -0.030 |
| G | +0.511 | -0.164 |
| H | +0.454 | -0.287 |
| J | +0.368 | -0.391 |
| K | +0.259 | -0.470 |
| L | +0.134 | -0.519 |
| M | +0.000 | -0.537 |
| N | -0.134 | -0.519 |
| P | -0.259 | -0.470 |
| R | -0.368 | -0.391 |
| S | -0.454 | -0.287 |
| T | -0.511 | -0.164 |
| U | -0.536 | -0.030 |
| V | -0.527 | +0.101 |
| W | -0.485 | +0.230 |
| X | -0.413 | +0.343 |

| Contact Position | Location | |
|---|---|---|
| | X Axis | Y Axis |
| Y | -0.314 | +0.435 |
| Z | -0.196 | +0.500 |
| a | -0.068 | +0.454 |
| b | +0.068 | +0.454 |
| c | +0.173 | +0.363 |
| d | +0.285 | +0.283 |
| e | +0.362 | +0.175 |
| f | +0.399 | +0.046 |
| g | +0.392 | -0.088 |
| h | +0.341 | -0.213 |
| i | +0.251 | -0.314 |
| j | +0.133 | -0.379 |
| k | +0.000 | -0.402 |
| m | -0.133 | -0.379 |
| n | -0.251 | -0.314 |
| p | -0.341 | -0.213 |
| q | -0.392 | -0.088 |
| r | -0.399 | +0.046 |
| s | -0.362 | +0.175 |
| t | -0.285 | +0.283 |
| u | -0.173 | +0.363 |

| Contact Position | Location | |
|---|---|---|
| | X Axis | Y Axis |
| v | +0.000 | +0.338 |
| w | +0.147 | +0.223 |
| x | +0.237 | +0.122 |
| y | +0.267 | -0.010 |
| z | +0.228 | -0.139 |
| AA | +0.131 | -0.233 |
| BB | +0.000 | -0.267 |
| CC | -0.131 | -0.233 |
| DD | -0.228 | -0.139 |
| EE | -0.267 | -0.010 |
| FF | -0.237 | +0.122 |
| GG | -0.147 | +0.223 |
| HH | +0.000 | +0.200 |
| JJ | +0.105 | +0.094 |
| KK | +0.135 | -0.041 |
| LL | +0.000 | -0.132 |
| MM | -0.135 | -0.041 |
| NN | -0.105 | +0.094 |
| PP | +0.000 | +0.000 |
| — | — | — |

**ROBUST**

- Marine bronze shell
- Excellent corrosion resistance
- -65°C to +175°C operating temperature range
- Excellent EMI protection

**RELIABLE**

- 100% scoop proof
- Self locking threaded coupling

**COMPLIANT**

- STD CECC 75201-002
- RoHS compliant

**VERSATILE**

- Available in 9 shell sizes
- Single hole mounting
- Environmentally sealed

**APPLICATIONS**

- Shipboard
- Ground vehicles

# DTS-B Series Bronze Connectors

## 38999 Series III-Style Connectors

DEUTSCH DTS-B threaded connectors are MIL-DTL-38999 Series III and STD CECC 75201-002 styles, but feature a bronze shell with a scoop-proof design, and environmental sealing to help withstand harsh marine environments.

Marine bronze offers excellent corrosion protection. The shell material is robust and inherently resists corrosion, eliminating the need for plating that can wear to expose base materials.

The DEUTSCH DTS-B Series subminiature circular connectors offer a scoop-proof design for easy, reliable mating and a threaded coupling for excellent vibration resistance. Available in nine shell sizes, the connector's arrangements, contacts and tools all conform to standard MIL-DTL 38999 Series III. Excellent corrosion resistance makes them well suited to most marine and military ground vehicle applications.

# DTS-B Bronze Connectors

## 38999 Series III-Style Connectors

## Specifications

### MATERIALS

- **Shell:** Marine bronze
- **Insert:** Thermoplastic and fluorinated silicone elastomer
- **EMI Spring Fingers:** Nickel or cadmium-plated beryllium copper
- **O-Ring:** Fluorinated silicone elastomer

### ENVIRONMENTAL

- **Temperature Range:** -65°C to +175°C
- **Fluid Resistance:** Fluid immersion per EIA 364.10, including resistance to
  MIL-PRF-5606: Hydraulic fluid
  MIL-DTL-83133: JP-8 aviation fuel
  MIL-PRF-7808: Lubricating oil
  MIL-PRF-23699: Lubricating oil
  MIL-A-8243: Deicing/defrosting fluid
  MIL-C-25769: Aircraft cleaning compound
  MIL-PRF-87937: Aircraft cleaning compound
  MIL-G-3056: Gasoline
- **Salt Spray:** 500 hours
- **Thermal Cycling:** per MIL-STD-1344 method 1001 test B

### MECHANICAL

- **Sine Vibration:** Up to 60 g for 36 hr.
- **Random Vibration:** Up to 41.7 g for 16 hr. at 175° C
  Up to 50 g for 16 hr. at ambient temperature
- **Shock:** 300 g, 3 ms in the 3 axes
- **Durability:** 500 mating cycles
- **Contact Retention:**
  Size 23: 44 N (10 lb.)
  Size 22D: 44 N (10 lb.)
  Size 20: 67 N (15 lb.)
  Size 16: 111 N (25 lb.)
  Size 12: 111 N (25 lb.)
  Size 8: 111 N (25 lb.)

### ELECTRICAL

- **Shell-to-Shell Conductivity:** 2.5 mV max.
- **Shielding Effectiveness:** >90 dB at 100 MHz, >65 dB through 10 GHz

# DTS-B Bronze Connectors

## 38999 Series III-Style Connectors

### Voltage Rating

| Service Rating | Suggested Operating Voltage | | Test Voltage at Altitude ($VAC_{rms}$) | | | |
|---|---|---|---|---|---|---|
| | $VAC_{rms}$ | VDC | Sea Level | 50,000 Ft. | 70,000 Ft. | 100,000 Ft. |
| M | 400 | 550 | 1300 | 550 | 350 | 200 |
| N | 300 | 450 | 1000 | 400 | 260 | 200 |
| I | 600 | 850 | 1800 | 600 | 400 | 200 |
| II | 750 | 1050 | 2300 | 800 | 500 | 200 |

### Current Rating

| Contact Size | Test Current (A) | Voltage Drop (mV) |
|---|---|---|
| 23 | 5 | 73 |
| 22D | 5 | 73 |
| 20 | 7.5 | 55 |
| 16 | 13 | 50 |
| 12 | 23 | 42 |
| 10 | 33 | 34 |
| 8 | 46 | 26 |

### Thread Sizes

| Shell Size | Accessory Thread (6g 0.100R) | Mating Thread (0.1P-0.3L) | Jam Nut Thread (6g 0.100R) |
|---|---|---|---|
| 9 | M12 x 1.0 | .6250 | M17 x 1.0 |
| 11 | M15 x 1.0 | .7500 | M20 x 1.0 |
| 13 | M18 x 1.0 | .8750 | M25 x 1.0 |
| 15 | M22 x 1.0 | 1.0000 | M28 x 1.0 |
| 17 | M25 x 1.0 | 1.1875 | M32 x 1.0 |
| 19 | M28 x 1.0 | 1.2500 | M35 x 1.0 |
| 21 | M31 x 1.0 | 1.3750 | M38 x 1.0 |
| 23 | M34 x 1.0 | 1.5000 | M41 x 1.0 |
| 25 | M37 x 1.0 | 1.6250 | M44 x 1.0 |

# DTS-B Bronze Connectors

## 38999 Series III-Style Connectors

### Part Numbering

**DTS 24 B 15 - 19 P N**

**FAMILY**
**DTS**

**STYLE**
**20** Square Flange Receptacle
**24** Jam Nut Receptacle
**26** Plug

**MATERIAL**
**B** Marine Bronze

**SHELL SIZE**
**9, 11, 13, 15, 17, 19, 21, 23, 25**

**INSERT ARRANGEMENT**
**P** Pin
**S** Socket
**H** 1500-Cycle Pin
**J** 1500-Cycle Socket
**A** Less Pin
**B** Less Socket
**U** PCB Pin
**M** PCB Socket

**KEYING**
**N** (Normal)
**A, B, C, D, E**

# DTS-B Bronze Connectors

## 38999 Series III-Style Connectors

### Square Flange Receptacle
### Type 20

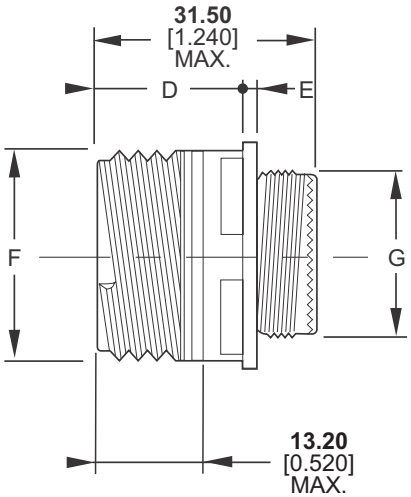


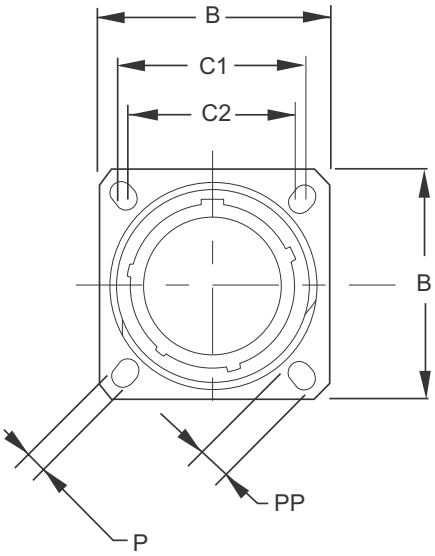


| Shell Size | B ±0.3 (±0.012) | C1 | C2 | D Max. | E Max. | F ±0.1 (±0.004) | G ±0.1 (±0.004) | P ±0.2 (±0.008) | PP ±0.2 (±0.008) |
|---|---|---|---|---|---|---|---|---|---|
| 09 | **23.80**<br>0.937 | **18.26**<br>0.719 | **15.09**<br>0.594 | **20.90**<br>0.823 | **2.50**<br>0.098 | **15.75**<br>0.620 | **11.90**<br>0.469 | **3.25**<br>0.128 | **5.49**<br>0.216 |
| 11 | **26.20**<br>1.031 | **20.62**<br>0.812 | **18.26**<br>0.719 | **20.90**<br>0.823 | **2.50**<br>0.098 | **18.90**<br>0.744 | **14.90**<br>0.587 | **3.25**<br>0.128 | **4.93**<br>0.194 |
| 13 | **28.60**<br>1.126 | **23.01**<br>0.906 | **20.62**<br>0.812 | **20.90**<br>0.823 | **2.50**<br>0.098 | **22.10**<br>0.870 | **17.90**<br>0.705 | **3.25**<br>0.128 | **4.93**<br>0.194 |
| 15 | **31.00**<br>1.220 | **24.61**<br>0.969 | **23.01**<br>0.906 | **20.90**<br>0.823 | **2.50**<br>0.098 | **25.25**<br>0.994 | **21.90**<br>0.862 | **3.25**<br>0.128 | **4.93**<br>0.194 |
| 17 | **33.30**<br>1.311 | **26.97**<br>1.062 | **24.61**<br>0.969 | **20.90**<br>0.823 | **2.50**<br>0.098 | **29.95**<br>1.179 | **24.90**<br>0.980 | **3.25**<br>0.128 | **4.93**<br>0.194 |
| 19 | **36.50**<br>1.437 | **29.36**<br>1.156 | **26.97**<br>1.062 | **20.90**<br>0.823 | **2.50**<br>0.098 | **31.55**<br>1.242 | **27.90**<br>1.098 | **3.25**<br>0.128 | **4.93**<br>0.194 |
| 21 | **39.70**<br>1.563 | **31.75**<br>1.250 | **29.36**<br>1.156 | **20.10**<br>0.791 | **3.20**<br>0.126 | **34.70**<br>1.366 | **30.90**<br>1.217 | **3.25**<br>0.128 | **4.93**<br>0.194 |
| 23 | **42.90**<br>1.689 | **34.93**<br>1.375 | **31.75**<br>1.250 | **20.10**<br>0.791 | **3.20**<br>0.126 | **37.90**<br>1.492 | **33.90**<br>1.335 | **3.91**<br>0.154 | **6.15**<br>0.242 |
| 25 | **46.00**<br>1.811 | **38.10**<br>1.500 | **34.93**<br>1.375 | **20.10**<br>0.791 | **3.20**<br>0.126 | **41.10**<br>1.618 | **36.90**<br>1.453 | **3.91**<br>0.154 | **6.15**<br>0.242 |

**Millimeters** Inches

# DTS-B Bronze Connectors

## 38999 Series III-Style Connectors

### Jam Nut Receptacle
### Type 24

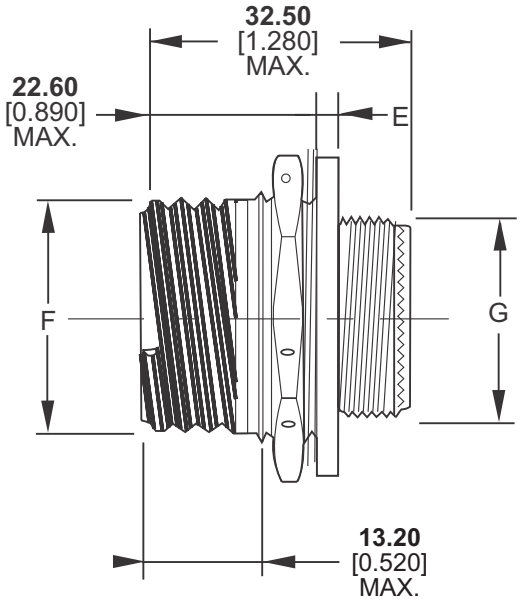


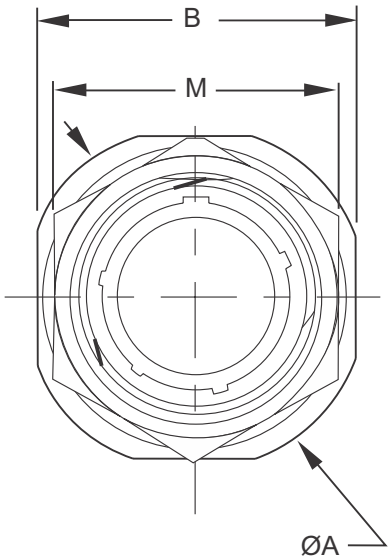


| Shell Size | A ±0.3 (±0.012) | B ±0.4 (±0.016) | E +0.07/-0.1 (+0.028/-0.004) | F ±0.1 (±0.004) | G ±0.1 (±0.004) | M |
|---|---|---|---|---|---|---|
| 09 | **30.20**<br>1.189 | **27.00**<br>1.063 | **2.20**<br>0.087 | **15.75**<br>0.620 | **11.90**<br>0.469 | **21.82**<br>0.859 |
| 11 | **34.90**<br>1.374 | **31.80**<br>1.252 | **2.20**<br>0.087 | **18.90**<br>0.744 | **14.90**<br>0.587 | **24.99**<br>0.984 |
| 13 | **38.10**<br>1.500 | **34.90**<br>1.374 | **2.20**<br>0.087 | **22.10**<br>0.870 | **17.90**<br>0.705 | **29.77**<br>1.172 |
| 15 | **41.30**<br>1.626 | **38.10**<br>1.500 | **2.20**<br>0.087 | **25.25**<br>0.994 | **21.90**<br>0.862 | **32.91**<br>1.296 |
| 17 | **44.50**<br>1.752 | **41.30**<br>1.626 | **2.20**<br>0.087 | **29.95**<br>1.179 | **24.90**<br>0.980 | **36.12**<br>1.422 |
| 19 | **49.20**<br>1.937 | **46.00**<br>1.811 | **3.00**<br>0.118 | **31.55**<br>1.242 | **27.90**<br>1.098 | **39.25**<br>1.545 |
| 21 | **52.40**<br>2.063 | **49.20**<br>1.937 | **3.00**<br>0.118 | **34.70**<br>1.366 | **30.90**<br>1.217 | **42.47**<br>1.672 |
| 23 | **55.60**<br>2.189 | **52.40**<br>2.063 | **3.00**<br>0.118 | **37.90**<br>1.492 | **33.90**<br>1.335 | **45.61**<br>1.796 |
| 25 | **58.70**<br>2.311 | **55.20**<br>2.173 | **3.00**<br>0.118 | **41.10**<br>1.618 | **36.90**<br>1.453 | **49.25**<br>1.939 |

**Millimeters** Inches

# DTS-B Bronze Connectors

## 38999 Series III-Style Connectors

**Plug**
**Type 26**

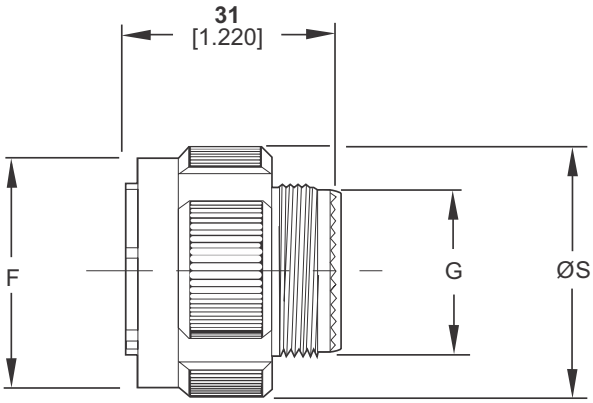


| Shell Size | F Max. | G Max. | S Max. |
|---|---|---|---|
| **09** | **18.40**<br>0.724 | **11.90**<br>0.469 | **21.80**<br>0.858 |
| **11** | **21.10**<br>0.831 | **14.90**<br>0.587 | **25.00**<br>0.984 |
| **13** | **25.40**<br>1.000 | **17.90**<br>0.705 | **29.40**<br>1.157 |
| **15** | **28.70**<br>1.130 | **21.90**<br>0.862 | **32.50**<br>1.280 |
| **17** | **32.20**<br>1.268 | **24.90**<br>0.980 | **35.70**<br>1.406 |
| **19** | **34.90**<br>1.374 | **27.90**<br>1.098 | **38.50**<br>1.516 |
| **21** | **38.10**<br>1.500 | **30.90**<br>1.217 | **41.70**<br>1.642 |
| **23** | **41.10**<br>1.618 | **33.90**<br>1.335 | **44.90**<br>1.768 |
| **25** | **44.30**<br>1.744 | **36.90**<br>1.453 | **48.00**<br>1.890 |

**Millimeters** Inches

# DTS-B Bronze Connectors

## 38999 Series III-Style Connectors

### Panel Cutouts

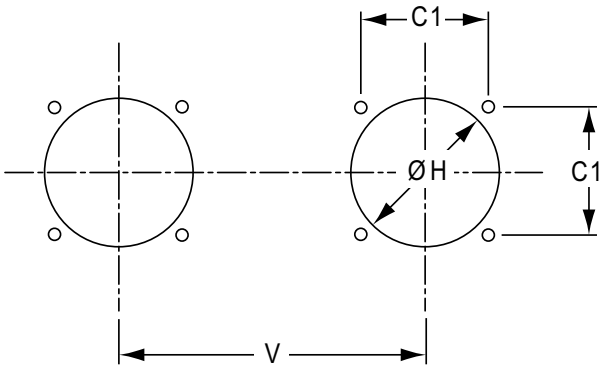


Square Flange Receptacle
(Type 20)

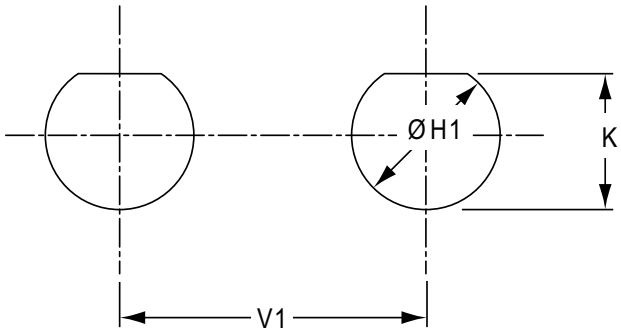


Jam Nut Receptacle
(Type 24)

| Shell Size | C1 | H Min. | | H1 Max. | K Max. | V Min. | V1 Min. |
|---|---|---|---|---|---|---|---|
| | | Front | Rear | | | | |
| **09** | **18.26**<br>0.719 | **13.11**<br>0.516 | **16.66**<br>0.656 | **17.70**<br>0.697 | **16.99**<br>0.669 | **24.60**<br>0.969 | **27.80**<br>1.094 |
| **11** | **20.62**<br>0.812 | **15.08**<br>0.594 | **22.22**<br>0.875 | **20.88**<br>0.822 | **19.53**<br>0.769 | **27.00**<br>1.063 | **32.60**<br>1.283 |
| **13** | **23.01**<br>0.906 | **19.05**<br>0.750 | **23.42**<br>0.922 | **25.58**<br>1.007 | **24.26**<br>0.995 | **30.20**<br>1.189 | **36.00**<br>1.417 |
| **15** | **24.61**<br>0.969 | **23.01**<br>0.906 | **26.59**<br>1.047 | **28.80**<br>1.134 | **27.53**<br>1.084 | **33.30**<br>1.331 | **39.60**<br>1.559 |
| **17** | **26.97**<br>1.062 | **25.81**<br>1.106 | **30.96**<br>1.219 | **31.98**<br>1.259 | **30.68**<br>1.208 | **36.50**<br>1.437 | **43.30**<br>1.705 |
| **19** | **29.36**<br>1.156 | **28.98**<br>1.141 | **32.94**<br>1.297 | **35.15**<br>1.384 | **33.86**<br>1.333 | **39.30**<br>1.547 | **47.00**<br>1.850 |
| **21** | **31.75**<br>1.250 | **32.16**<br>1.266 | **36.12**<br>1.422 | **38.28**<br>1.507 | **37.06**<br>1.459 | **42.50**<br>1.673 | **50.60**<br>1.992 |
| **23** | **34.93**<br>1.375 | **34.93**<br>1.375 | **39.29**<br>1.547 | **41.50**<br>1.634 | **40.01**<br>1.575 | **45.70**<br>1.799 | **54.20**<br>2.134 |
| **25** | **38.10**<br>1.500 | **37.69**<br>1.484 | **42.47**<br>1.672 | **44.68**<br>1.759 | **43.41**<br>1.709 | **48.80**<br>1.921 | **59.70**<br>2.350 |

**Millimeters** Inches

## EASY TO USE

- Integrated backshell reduces assembly time
- Single or double knurled areas
- Terminate cable shield directly to the connector for optimal performance

## HIGH-TEMPERATURE VERSIONS

- Class K stainless steel
- Temperatures to 200°C
- No costly and heavy backshell
- Connectors cable of receiving a shrink boot or cable overmold

## SPACE AND WEIGHT SAVINGS

- Lower profile
- Lighter weight than assemblies with separate backshells

# Series III Connectors with Integral Accessory

### DEUTSCH DTS Connectors
### DEUTSCH DTS Firewall Connectors

DEUTSCH connectors with integral accessory help provide space and weight savings over using a separate backshell. One or two knurled areas help support reliable shield termination with a band strap. The connectors also accept a heat-shrink boot or overmolding.

The connectors are available in aluminum with a variety of finishes or in stainless steel for Class K engine and firewall applications.

# DTS Aluminum Connectors

## Single Banding Sections

### Part Numbering

**DTS 24 F 25 R 29 P N**

**FAMILY**
**DTS** D38999 Series III

**SHELL STYLE**
**20** Square Flange Receptacle
**24** Jam Nut Receptacle
**26** Plug

**CLASS**
**F** Nickel
**G** Space-Grade Nickel
**T** PTFE Nickel
**W** Olive Drab Cadmium
**Z** Black Zinc Nickel

**SHELL SIZE**
**9, 11, 13, 15, 17, 19, 21, 23, 25**

**CONFIGURATION**
**R** Banding (Integrated Backshell)

**INSERT ARRANGEMENT**
See Insert Arrangement Tables, pages 10-17 and 22-23

**CONTACTS**
**P** Pin
**S** Socket

**KEYING**
**N, A, B, C, D, E**

Note: If ordering less contacts, please add -6149 to the end of the part number

# DTS Aluminum Connectors

## Square Flange Receptacle

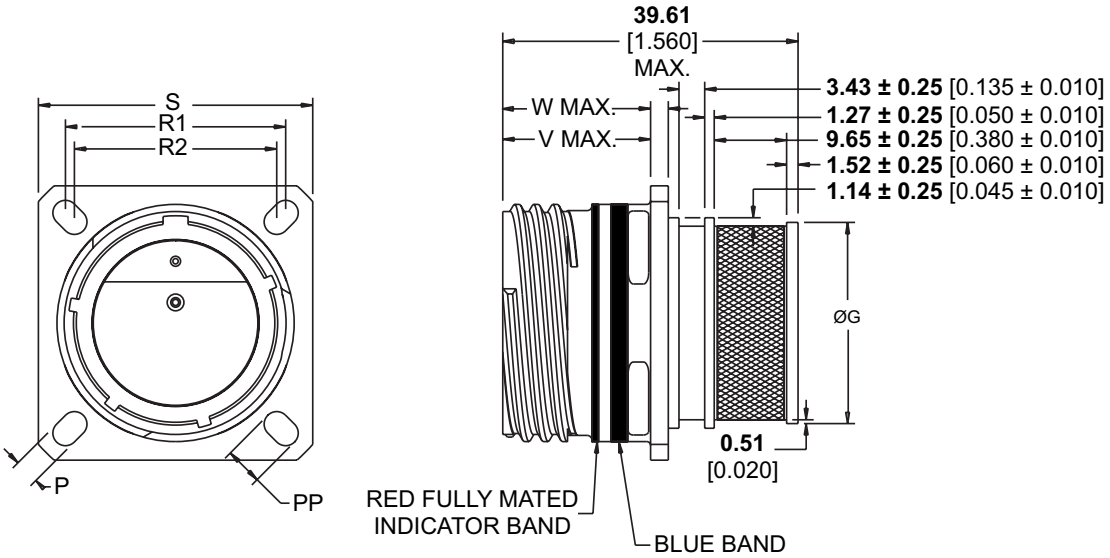


| Shell Size | ØG±0.38 ±0.015 | V | W | P | PP | R1 | R2 | S |
|---|---|---|---|---|---|---|---|---|
| 09 | **11.43** 0.450 | | | | | **18.26** 0.719 | **15.09** 0.594 | **23.80** 0.937 |
| 11 | **14.63** 0.576 | | | | | **20.62** 0.812 | **18.26** 0.719 | **26.19** 1.031 |
| 13 | **17.53** 0.690 | | | | | **23.01** 0.906 | **20.62** 0.812 | **28.60** 1.126 |
| 15 | **20.83** 0.820 | **20.88** 0.822 | **2.49** 0.098 | **3.25** 0.128 | **4.93** 0.194 | **24.61** 0.969 | **23.01** 0.906 | **30.99** 1.220 |
| 17 | **23.83** 0.938 | | | | | **26.97** 1.062 | **24.61** 0.969 | **33.30** 1.311 |
| 19 | **26.82** 1.056 | | | | | **29.36** 1.156 | **26.97** 1.062 | **36.50** 1.437 |
| 21 | **29.82** 1.174 | | | | | **31.75** 1.250 | **29.36** 1.156 | **39.70** 1.563 |
| 23 | **32.82** 1.292 | **20.09** 0.791 | **3.20** 0.126 | **3.91** 0.154 | **6.15** 0.242 | **34.93** 1.375 | **31.75** 1.250 | **42.90** 1.689 |
| 25 | **35.81** 1.410 | | | | | **38.10** 1.500 | **34.93** 1.375 | **46.00** 1.811 |

**Millimeters** Inches

# DTS Aluminum Connectors

## Jam Nut Receptacle

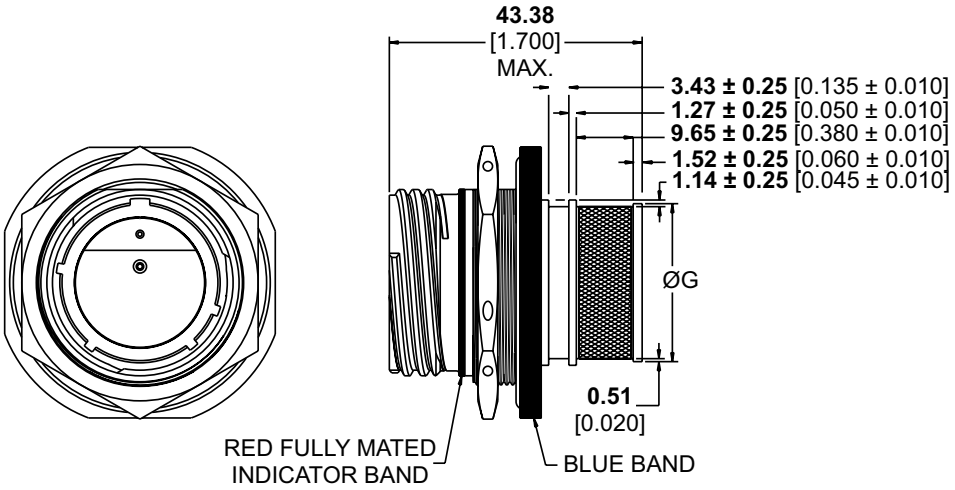


| Shell Size | ØG ±0.38<br>±0.015 |
|---|---|
| 09 | **11.43**<br>0.450 |
| 11 | **14.63**<br>0.576 |
| 13 | **17.53**<br>0.690 |
| 15 | **20.83**<br>0.820 |
| 17 | **23.83**<br>0.938 |
| 19 | **26.82**<br>1.056 |
| 21 | **29.82**<br>1.174 |
| 23 | **32.82**<br>1.292 |
| 25 | **35.81**<br>1.410 |

**Millimeters** Inches

# DTS Aluminum Connectors

## Plug

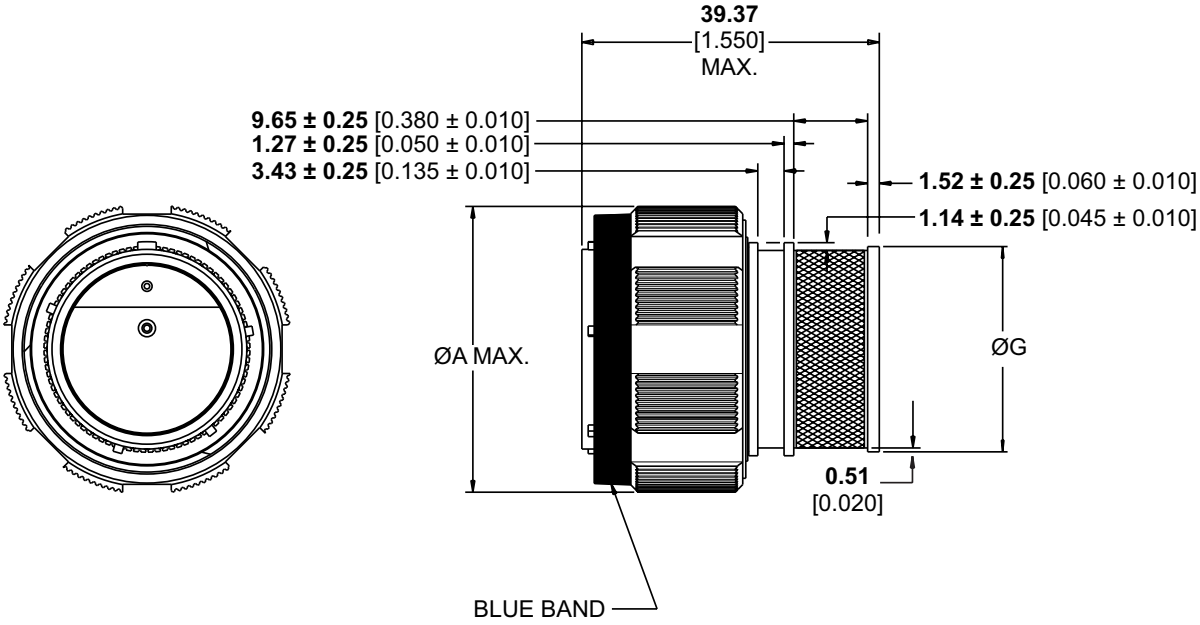


| Shell Size | A | ØG ±0.38<br>±0.015 |
|---|---|---|
| 09 | **21.79**<br>0.858 | **11.43**<br>0.450 |
| 11 | **24.99**<br>0.984 | **14.63**<br>0.576 |
| 13 | **29.39**<br>1.157 | **17.53**<br>0.690 |
| 15 | **32.49**<br>1.279 | **20.83**<br>0.820 |
| 17 | **35.69**<br>1.405 | **23.83**<br>0.938 |
| 19 | **38.48**<br>1.515 | **26.82**<br>1.056 |
| 21 | **41.68**<br>1.641 | **29.82**<br>1.174 |
| 23 | **44.91**<br>1.768 | **32.82**<br>1.292 |
| 25 | **47.98**<br>1.889 | **35.81**<br>1.410 |

**Millimeters** Inches

# DTS-K Stainless Steel Firewall Connectors

## Double Banding Sections

### Part Numbers

xx = Insert Arrangement Code from dimensions table on next page

| Polarization | Plug | | Square Flange Receptacle | | Jam Nut Receptacle | |
|---|---|---|---|---|---|---|
| | Pin Contact | Socket Contact | Pin Contact | Socket Contact | Pin Contact | Socket Contact |
| N | 781-8037-xx | 781-8057-xx | 781-8060-xx | 781-8070-xx | 781-8043-xx | 781-8049-xx |
| A | 781-8131-xx | 781-8141-xx | 781-8061-xx | 781-8071-xx | 781-8044-xx | 781-8050-xx |
| B | 781-8132-xx | 781-8142-xx | 781-8062-xx | 781-8072-xx | 781-8045-xx | 781-8051-xx |
| C | 781-8133-xx | 781-8143-xx | 781-8063-xx | 781-8073-xx | 781-8046-xx | 781-8052-xx |
| D | 781-8134-xx | 781-8144-xx | 781-8064-xx | 781-8074-xx | 781-8047-xx | 781-8053-xx |
| E | 781-8135-xx | 781-8145-xx | 781-8065-xx | 781-8075-xx | 781-8048-xx | 781-8054-xx |

### Square Flange Receptacle

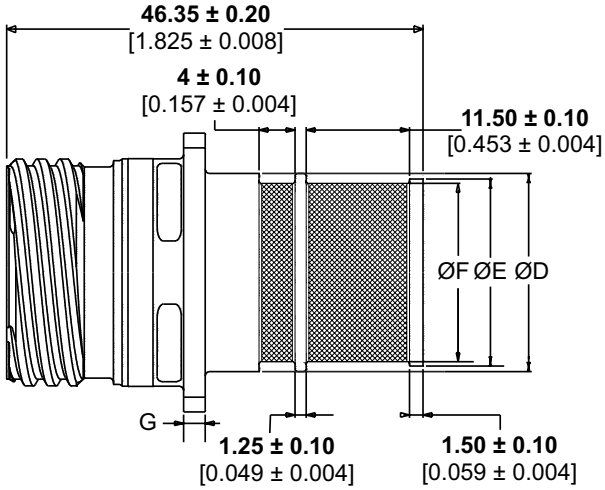


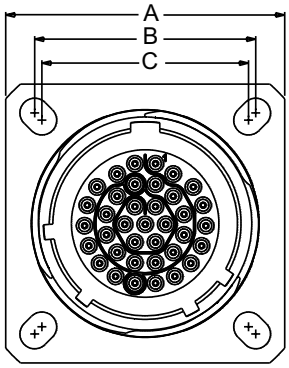

# DTS-K Stainless Steel Firewall Connectors

## Double Banding Sections

| Insert Code | Size - Insert | A ±0.3<br>±0.012 | B ±0.10<br>±0.005 | C ±0.10<br>±0.004 | ØD ±0.12<br>±0.005 | ØE ±0.05<br>±0.002 | ØF ±0.05<br>±0.002 | G Max. |
|---|---|---|---|---|---|---|---|---|
| 03 | 09-35 | **23.80**<br>0.937 | **18.26**<br>0.719 | **15.09**<br>0.594 | **12.06**<br>0.475 | **11.43**<br>0.450 | **10.46**<br>0.412 | **2.50**<br>0.098 |
| 05 | 09-98 | | | | | | | |
| 10 | 11-35 | **28.60**<br>1.126 | **23.01**<br>0.906 | **18.26**<br>0.719 | **15.06**<br>0.593 | **14.63**<br>0.576 | **13.67**<br>0.538 | |
| 11 | 11-98 | | | | | | | |
| 12 | 11-99 | | | | | | | |
| 14 | 13-08 | | | **20.62**<br>0.812 | **18.08**<br>0.712 | **17.53**<br>0.690 | **16.56**<br>0.652 | |
| 16 | 13-35 | | | | | | | |
| 17 | 13-98 | | | | | | | |
| 18 | 15-05 | **31.00**<br>1.220 | **24.61**<br>0.969 | **23.01**<br>0.906 | **22.07**<br>0.869 | **20.83**<br>0.820 | **19.86**<br>0.782 | |
| 20 | 15-18 | | | | | | | |
| 21 | 15-19 | | | | | | | |
| 22 | 15-35 | | | | | | | |
| 24 | 15-97 | | | | | | | |
| 25 | 17-06 | **33.30**<br>1.311 | **26.97**<br>1.062 | **24.61**<br>0.969 | **25.07**<br>0.987 | **23.83**<br>0.938 | **22.86**<br>0.900 | |
| 26 | 17-08 | | | | | | | |
| 27 | 17-26 | | | | | | | |
| 28 | 17-35 | | | | | | | |
| 31 | 19-11 | **36.50**<br>1.437 | **29.36**<br>1.156 | **26.97**<br>1.062 | **28.07**<br>1.105 | **26.83**<br>1.056 | **25.86**<br>1.018 | |
| 34 | 19-32 | | | | | | | |
| 46 | 21-39 | **39.70**<br>1.563 | **31.75**<br>1.250 | **29.36**<br>1.156 | **31.06**<br>1.223 | **29.82**<br>1.174 | **28.91**<br>1.138 | **3.20**<br>0.126 |
| 47 | 21-41 | | | | | | | |
| 55 | 23-53 | **42.90**<br>1.689 | **34.93**<br>1.375 | **31.75**<br>1.250 | **34.06**<br>1.341 | **32.82**<br>1.292 | **31.85**<br>1.254 | |
| 61 | 25-04 | **46.00**<br>1.811 | **38.10**<br>1.500 | **34.93**<br>1.375 | **37.06**<br>1.459 | **35.81**<br>1.410 | **34.85**<br>1.372 | |
| 65 | 25-35 | | | | | | | |
| 68 | 25-61 | | | | | | | |

**Millimeters** Inches

# DTS-K Stainless Steel Firewall Connectors

## Double Banding Sections

**Plug**

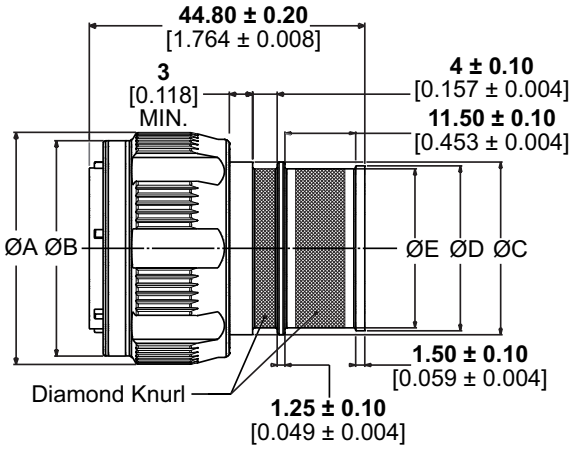


| Insert Code | Size - Insert | ØA Max. | ØB Max. | ØC ±0.12 ±0.005 | ØD ±0.05 ±0.002 | ØE ±0.05 ±0.002 |
|---|---|---|---|---|---|---|
| 03 | 09-35 | **21.80** 0.858 | **18.60** 0.732 | **12.06** 0.475 | **11.43** 0.450 | **10.46** 0.412 |
| 05 | 09-98 | | | | | |
| 10 | 11-35 | **25.0** 0.984 | **21.30** 0.839 | **15.06** 0.593 | **14.63** 0.576 | **13.67** 0.538 |
| 11 | 11-98 | | | | | |
| 14 | 13-08 | **29.40** 1.157 | **25.60** 1.008 | **18.08** 0.712 | **17.53** 0.690 | **16.56** 0.652 |
| 16 | 13-35 | | | | | |
| 17 | 13-98 | | | | | |
| 18 | 15-05 | **32.50** 1.280 | **28.90** 1.138 | **22.07** 0.869 | **20.83** 0.820 | **19.86** 0.782 |
| 20 | 15-18 | | | | | |
| 21 | 15-19 | | | | | |
| 22 | 15-35 | | | | | |
| 24 | 15-97 | | | | | |
| 25 | 17-06 | **35.70** 1.406 | **32.40** 1.276 | **25.07** 0.987 | **23.83** 0.938 | **22.86** 0.900 |
| 26 | 17-08 | | | | | |
| 27 | 17-26 | | | | | |
| 28 | 17-35 | | | | | |
| 31 | 19-11 | **38.50** 1.516 | **35.10** 1.382 | **28.07** 1.105 | **26.83** 1.056 | **25.86** 1.018 |
| 34 | 19-32 | | | | | |
| 35 | 19-35 | | | | | |
| 45 | 21-35 | **41.70** 1.642 | **38.30** 1.508 | **31.06** 1.223 | **29.82** 1.174 | **28.91** 1.138 |
| 46 | 21-39 | | | | | |
| 47 | 21-41 | | | | | |
| 55 | 23-53 | **44.90** 1.768 | **41.30** 1.626 | **34.06** 1.341 | **32.82** 1.292 | **31.85** 1.254 |
| 61 | 25-04 | **48.00** 1.890 | **44.50** 1.752 | **37.06** 1.459 | **35.81** 1.410 | **34.85** 1.372 |
| 65 | 25-35 | | | | | |
| 68 | 25-61 | | | | | |

**Millimeters** Inches

# DTS-K Stainless Steel Firewall Connectors

## Single Banding Sections

### Part Numbers

xx = Insert Arrangement Code from dimensions table on next page

| Polarization | Plug | | Square Flange Receptacle | | Jam Nut Receptacle | |
|---|---|---|---|---|---|---|
| | Pin Contact | Socket Contact | Pin Contact | Socket Contact | Pin Contact | Socket Contact |
| N | 781-8130-xx | 781-8010-xx | 781-8020-xx | 781-8030-xx | 781-8043-xx | 781-8049-xx |
| A | 781-8131-xx | 781-8011-xx | 781-8021-xx | 781-8031-xx | 781-8044-xx | 781-8050-xx |
| B | 781-8132-xx | 781-8012-xx | 781-8022-xx | 781-8032-xx | 781-8045-xx | 781-8051-xx |
| C | 781-8133-xx | 781-8013-xx | 781-8023-xx | 781-8033-xx | 781-8046-xx | 781-8052-xx |
| D | 781-8134-xx | 781-8014-xx | 781-8024-xx | 781-8034-xx | 781-8047-xx | 781-8053-xx |
| E | 781-8135-xx | 781-8015-xx | 781-8025-xx | 781-8035-xx | 781-8048-xx | 781-8054-xx |

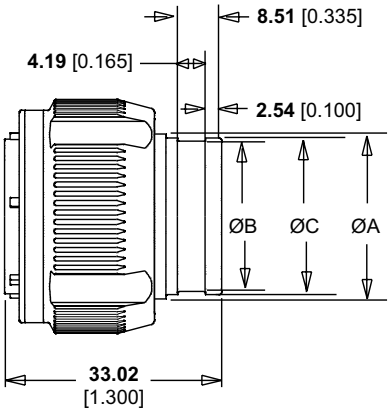


**Plug**

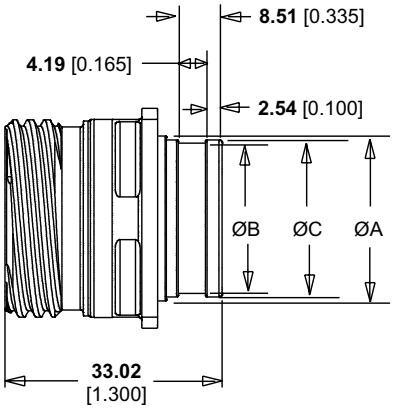


**Square Flange Receptacle**

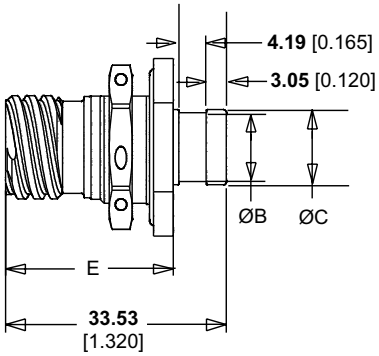


**Jam Nut Receptacle**

# DTS-K Stainless Steel Firewall Connectors

| Insert Code (xx) | Size - Insert | ØA ±0.12 ±0.005 | ØB ±0.05 ±0.002 | ØC ±0.05 ±0.002 | ØD Min. | E Max. |
|---|---|---|---|---|---|---|
| 03 | 9-35 | **12.06** 0.475 | **10.46** 0.412 | **11.43** 0.450 | **13.46** 0.530 | **25.60** 1.008 |
| 05 | 9-98 | | | | | |
| 11 | 11-98 | **15.06** 0.593 | **13.67** 0.538 | **14.63** 0.576 | **TBD** | **TBD** |
| 14 | 13-8 | **18.08** 0.712 | **16.56** 0.652 | **17.53** 0.690 | | |
| 17 | 13-98 | | | | | |
| 18 | 15-05 | **22.07** 0.869 | **19.86** 0.782 | **20.83** 0.820 | **22.86** 0.900 | **25.60** 1.008 |
| 20 | 15-18 | | | | | |
| 21 | 15-19 | | | | | |
| 25 | 17-6 | **25.07** 0.987 | **22.86** 0.900 | **23.83** 0.938 | **25.86** 1.018 | |
| 26 | 17-8 | | | | | |
| 27 | 17-26 | | | | | |
| 31 | 19-11 | **28.07** 1.105 | **25.86** 1.018 | **26.82** 1.056 | **TBD** | **TBD** |
| 34 | 19-32 | | | | | |
| 46 | 21-39 | **31.06** 1.223 | **28.91** 1.138 | **29.82** 1.174 | | |
| 47 | 21-41 | | | | | |
| 55 | 23-53 | **34.06** 1.341 | **31.85** 1.254 | **32.82** 1.292 | | |
| 61 | 25-04 | **37.06** 1.459 | **34.85** 1.372 | **35.81** 1.410 | | |
| 68 | 25-61 | | | | | |

**Millimeters** Inches

## ROBUST

- Signal and power contacts in same housing
- Up to four 150 A or one 300 A high-current contacts
- Threaded coupling with self-locking mechanism for anti-vibration
- 100% scoop-proof design

## RELIABLE

- Excellent contact retention under severe vibration
- Dedicated sealed backfitting and cable support grommet
- Interfacial sealing helps provide protection against aggressive fluid and dust ingress

## EMI PROTECTION

- RFI/EMI shielding fingers at mating interface

## EASY TO USE

- Rear removable crimp contacts
- Standard AS39029 Size 20 contacts for signals
- Space saving with integral power and signal wires

# DTS-HC High-Current Connectors

### 38999 Series III-Style Connectors

DEUTSCH DTS-HC high-current circular connectors provide power connections in the familiar 38999 form factor. They are optimized for use in harsh high-vibration environments where space is at a premium.

With integral power and signal wires in some configurations, the connectors also help save space and give you a variety of versatile contact termination options.

Rated to 175°C, DTS-HC connectors are the rugged choice for high-temperature applications. In addition, interfacial sealing helps provide protection from dust and aggressive fluids, while shielding fingers at the mating interface provide excellent EMI and RFI protection.

## Specifications

### MATERIALS

- **Shell/Coupling Ring:** High-strength aluminum alloy
- **Plating:** Nickel (standard), olive drab cadmium, or zinc cobalt
- **Insulators:** High-performance thermoplastic
- **Seals:** Fluorinated silicone
- **Contacts:** Gold-plated copper alloy

### ENVIRONMENTAL/MECHANICAL

- **Temperature:** -65°C to +175°C
- **Vibration:** Random, 50-2000 Hz, 5 $g^2$/Hz (per MIL-DTL-38999)
- **Dielectric Withstand Voltage:** 1500 VAC
- **Insulation Resistance:** 5000 MΩ min., 500 VDC,
- **Durability:** 500 mating cycles
- **Altitude:** 30,000 m (100,000 ft.) max.

### CURRENT RATING, CONTINUOUS

- **Size 00 Contact:** 300 A
- **Size 4 Contact:** 150 A
- **Size 20 Contact:** 7.5 A

### POWER CABLE CONDUCTOR TYPE

- **Size 4:** 4 AWG, 8 $mm^2$, 16 $mm^2$ and 25 $mm^2$ conductor
- **Size 00:** 70 $mm^2$

### CONFIGURATIONS

- **Size 21 Shell:** 2 Size 4 power contacts
- **Size 23 Shell:** 1 Size 00 power contact
- **Size 23 Shell:** 2 Size 4 power contacts and 3 Size 20 contacts
- **Size 25 Shell:** 4 Size 4 power contacts and 4 Size 20 contacts

## DTS-HC High-Current Connectors

### 38999 Series III-Style Connectors

#### Insert Arrangements

**21-240**
2 Size 4 Contacts

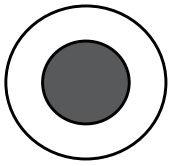

**23-100**
One Size 00 Contact

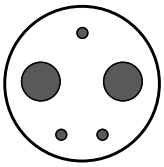

**23-24320**
2 Size 4 Contacts
3 Size 20 Contacts

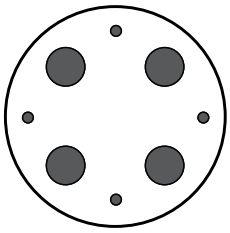

**25-44420**
4 Size 4 Contacts
4 Size 20 Contacts

#### Part Numbering

**DTS 26 F 23-24320 P N - 025**

**FAMILY**

**SHELL STYLE**
**20** Square Flange Receptacle
**24** Jam Nut Receptacle
**26** Free Plug

**FINISH**
**F** Nickel
**W** Olive Drab Cadmium
**Z** Black Zinc Nickel
**U** Zinc Cobalt

**SHELL SIZE/ ARRANGEMENT**
**21-240**
**23-100**
**23-24320**
**25-44420**

**CONTACT (CONDUCTOR SIZE)**
**25** 25 $mm^2$ (Ø7.33 mm max)
**16** 16 $mm^2$ (Ø5.48 mm max)
**08** 8 $mm^2$ (Ø4.50 mm max)
**04** 4 AWG (Ø6.8 mm max)
**S** prefix = Split Finger Socket
**O** prefix = Pin
**—** Hyperboloid Socket (consult TE for availability)

**KEYWAY**
**N** Normal
**A, B**

**CONTACT TYPE**
**P** Pin **A** Less Pin Contacts
**S** Socket **B** Less Socket Contacts

# DTS-HC High-Current Connectors

## 38999 Series III-Style Connectors

### Square Flange Receptacle
### Type 20

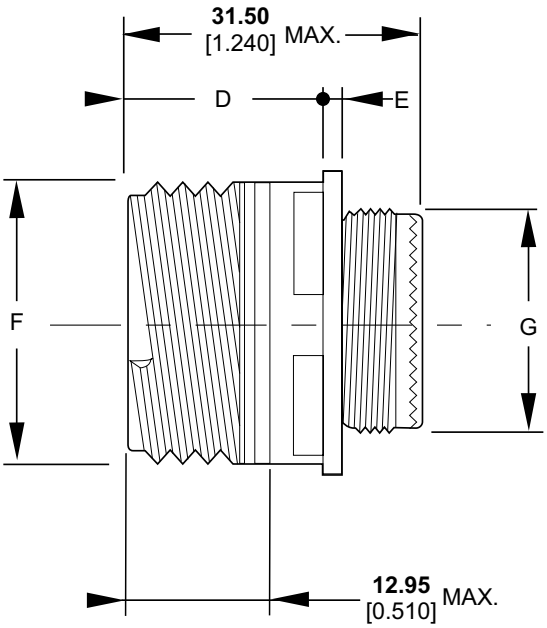


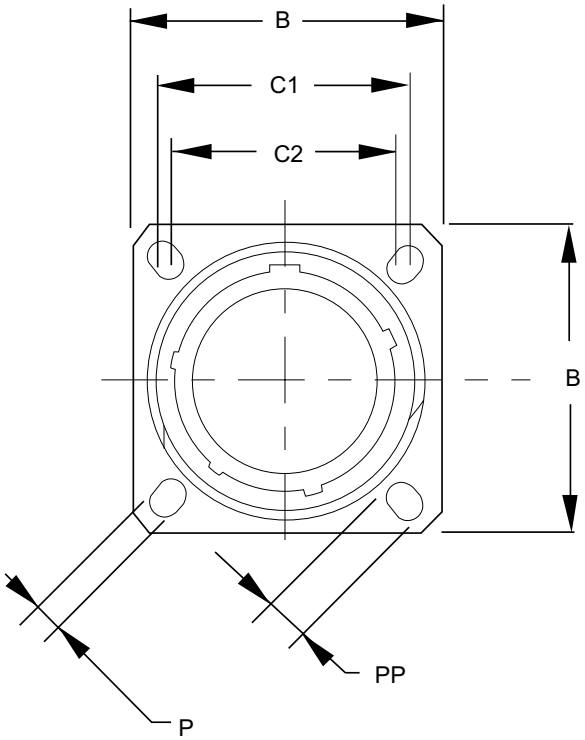


| Shell Size | B | C1 | C2 | D Max. | E Max. | F | G | P | PP |
|---|---|---|---|---|---|---|---|---|---|
| 21 | **39.70**<br>1.563 | **31.75**<br>1.250 | **29.36**<br>1.156 | **20.10**<br>0.791 | **3.20**<br>0.126 | **34.70**<br>1.366 | **30.90**<br>1.217 | **3.25**<br>0.128 | **4.93**<br>0.194 |
| 23 | **42.90**<br>1.689 | **34.93**<br>1.375 | **31.75**<br>1.250 | **20.10**<br>0.791 | **3.20**<br>0.126 | **37.90**<br>1.492 | **33.90**<br>1.335 | **3.91**<br>0.154 | **6.15**<br>0.242 |
| 25 | **46.00**<br>1.811 | **38.10**<br>1.500 | **34.93**<br>1.375 | **20.10**<br>0.791 | **3.20**<br>0.126 | **41.10**<br>1.618 | **36.90**<br>1.453 | **3.91**<br>0.154 | **6.15**<br>0.242 |

**Millimeters** Inches

# DTS-HC High-Current Connectors

## 38999 Series III-Style Connectors

### Jam Nut Receptacle
### Type 24

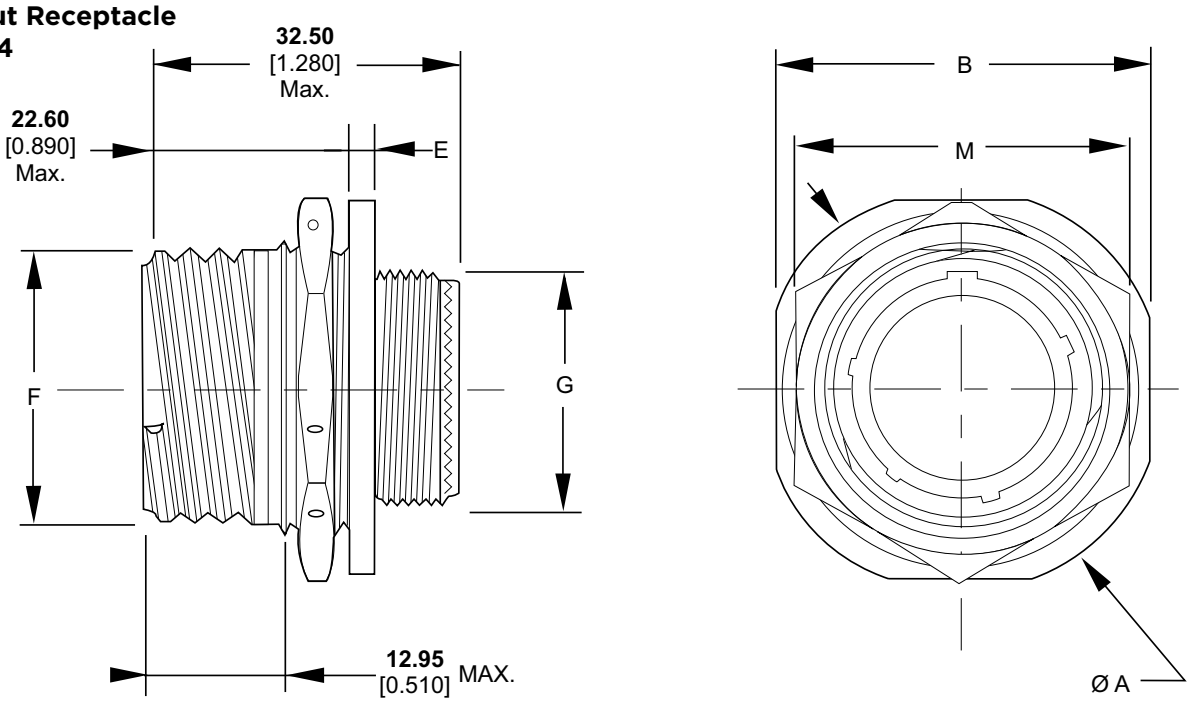


| Shell Size | A | B | E Max. | F | G | M Max. |
|---|---|---|---|---|---|---|
| 21 | **52.40**<br>2.063 | **49.20**<br>1.937 | **3.99**<br>0.157 | **34.70**<br>1.366 | **30.90**<br>1.217 | **46.00**<br>1.811 |
| 23 | **55.60**<br>2.189 | **52.40**<br>2.063 | **3.00**<br>0.118 | **37.90**<br>1.492 | **33.90**<br>1.335 | **50.00**<br>1.969 |
| 25 | **58.70**<br>2.311 | **55.60**<br>2.189 | **3.00**<br>0.118 | **41.10**<br>1.618 | **36.90**<br>1.453 | **51.23**<br>2.017 |

**Millimeters** Inches

### Plug
### Type 26

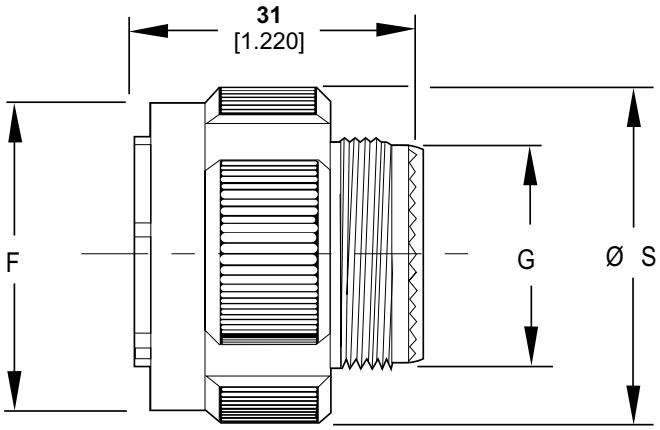


| Shell Size | F Max. | G | S Max. | Mass (g) |
|---|---|---|---|---|
| 21 | **38.10**<br>1.500 | **30.90**<br>1.217 | **41.70**<br>1.642 | **55** |
| 23 | **41.10**<br>1.618 | **33.90**<br>1.335 | **44.90**<br>1.768 | **67** |
| 25 | **44.30**<br>1.744 | **36.90**<br>1.453 | **48.00**<br>1.890 | **71** |

**Millimeters** Inches

# DTS-HC High-Current Connectors

## 38999 Series III-Style Connectors

### Contacts

| Contact Size | Conductor | Pin | Socket | Crimp Tool | Dieset or Positioner | Contact Removal Tool |
|---|---|---|---|---|---|---|
| 20 | 24 - 20 | 38941-20 | 38943-20 | M22520/2-01 | M22520/2-10 | M81969/14-10 |
| 8 | 6 mm² | 611091 | 611089 | M22520/23-01 | M22520/23-09 | 611218 |
| | 14 mm² | 605345-01-31 | 605344 | Consult TE for Tooling | | |
| 4 | 4 AWG | 611102 | 611103 | D51 | 31040 | 610136-TOOL |
| | 25 mm² | 605660 | 611103-025 | | | |
| | 16 mm² | 605734 | 611103-016 | | | |
| | 8 mm² | 611102 | 611103 | M22520/23-01 or D51 | M22520/23-11 | 610136-TOOL |
| 00 | 70 mm² | 610304 | 601365 | Consult TE for Tooling | | |
| 00 Bus Bar | ** | 610364 | 610299 | — | — | — |

** Consult TE

**HIGH PERFORMANCE**

- Up to 1000 A capability
- Rugged 38999-style connector and shell systems
- Rated -65°C to +175°C

**CONVENIENT**

- Variety of shell sizes
- Choose from straight or 90° configurations
- Threaded coupling and screened crimp termination options

**EASY ASSEMBLY**

- Simple adjustment of angled backshells (no special tooling)
- Low mating force
- Conductive jam nut O-ring option available

# POLAMCO High-Power Connectors

## 38999-Style Connectors for Harsh Military Environments

The POLAMCO high-power connector family provides a simple and effective way of terminating power cables in a harsh environment military connector system.

POLAMCO high-power connectors are optimized for cable sizes ranging from 50 $mm^2$ up to 240 $mm^2$, and are available in shell sizes 19 through 25, depending on the cable being terminated.

Rated to 175°C, these high-power MIL-DTL-38999 Series I and III-style connector systems give you a variety of versatile options including threaded termination or a screened crimp, with straight or 90° orientation.

# Specifications

## MATERIALS

- **Shell:** High-strength aluminum alloy, nickel aluminum bronze, or stainless steel
- **Contact Body:** Silver-plated copper alloy
- **Seals:** Silicone elastomer
- **Insulators:** Thermoplastic: PPS-GL40, UL94V-0
- **Plating Finishes:**
  Olive drab cadmium
  Black zinc nickel
  Electroless nickel
  Zinc cobalt
  (Contact TE for additional finishes)

| Plating Code | Plating Description | RoHS Compliant | Environmental Protection Conductivity |
|---|---|---|---|
| B | Olive drab cadmium (5-10 µm) QQ-P-416, Type II, Class 3 over electroless nickel | No | 500 hours salt spray |
| C | Electroless nickel, AMS-C-26047, Class 4, Grade B | Yes | 48 hours salt spray |
| ZB | Zinc cobalt (5-10 µm) over electroless nickel (2.5-7.5 µm) with an olive drab chromate conversion | Yes | 350 hours salt spray |
| ZN | Passivated black zinc nickel (5-12 µm) over electroless nickel (8-12 µm), ASTM B 841 Class 1 | Yes | 500 hours salt spray |
| ZK | Zinc cobalt (5-10 µm) over electroless nickel (2.5-7.5 µm) with a black chromate conversion | Yes | 500 hours salt spray |

## ELECTRICAL

- **Voltage:** 1800 VAC / 60 Hz (service rating 1)
- **Shell Continuity:** <5 mΩ
- **Current Rating (Approx. @ 40°C ambient):**
  **Shell Size 25:** 1000 A, <22 µΩ
  **Shell Size 23:** 800 A, <25 µΩ
  **Shell Size 21:** 600 A, <30 µΩ
  **Shell Size 19:** 400 A, <38 µΩ
- **Contact Resistance (Approx. @ 40°C ambient):**
  **Shell Size 25:** <22 µΩ
  **Shell Size 23:** <25 µΩ
  **Shell Size 21:** <30 µΩ
  **Shell Size 19:** <38 µΩ

## ENVIRONMENTAL/MECHANICAL

- **Durability:** 500 mating cycles
- **Vibration:** 6 hours in 3 axis, full current load (Def-Stan 0035)
- **Shock:** 500 m/s², 11 ms half sine
- **Temperature:** -65°C to +175°C
- **Sealing:** IP68 (2 m for 0.5 hour)
- **Salt Spray:** Up to 500 hours (depending on material/finish)

## CRIMP CONTACT CURRENT DE-RATING

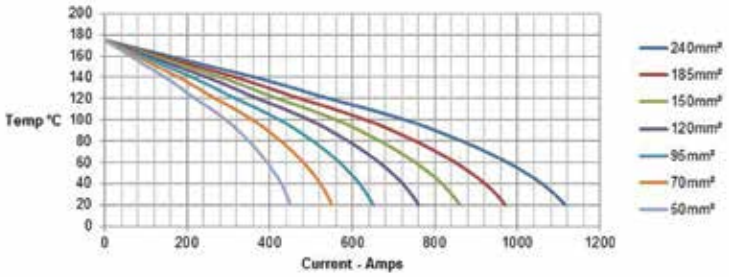

# POLAMCO High-Power Connectors

## Part Numbering

**PC4 20HP(AT) - BT 1 - 25 - 185 FS - S N - 1-C - L13**

**SERIES**

**SHELL STYLE**
- **20HP** Screened Backshell
- **24HP** Extra Long, 90°
- **26HP** Female Thread
- **20HPBF** Male Thread
- **24HPBF** Bulkhead Feedthrough
- **AT** Extra Large Bulkhead Feedthrough

**REAR TERMINATION**
- **BT** Screened Backshell
- **F** Female Threaded
- **M** Male Threaded Post (also available)

**ANGLE ENTRY**
(Does not apply to threaded contacts)
- **1** Straight
- **3** 90°
- **69** IP69K Straight Entry

**SHELL SIZE**

**CRIMP BARREL**
(Does not apply to threaded contacts)
**240, 185, 120 etc.**

**OPTIONAL PANEL THICKNESS (mm)**
Omit for standard

**MATERIAL AND FINISH**

**KEY ARRANGEMENT**
**N, A, B, C, D, E**

**CONTACT TYPE**
- **P** Pin
- **S** Socket
- **H3** 90° Crimp

**CABLE STRANDING**
- **FS** Fine Stranding (Hi Flex)
- **S** Standard Stranding

## Material Description Codes

| Material Code | Material Description |
|---|---|
| 1 | Aluminum Alloy 6262 / 6082 |
| 2 | Nickel Aluminum Bronze DGS 1043 / NES 833 (Marine Applications) |
| 4 | Stainless Steel 303 S31 / 304 |
| 46 | Stainless Steel 316 |

# POLAMCO High-Power Connectors

## Shielded Straight Plugs

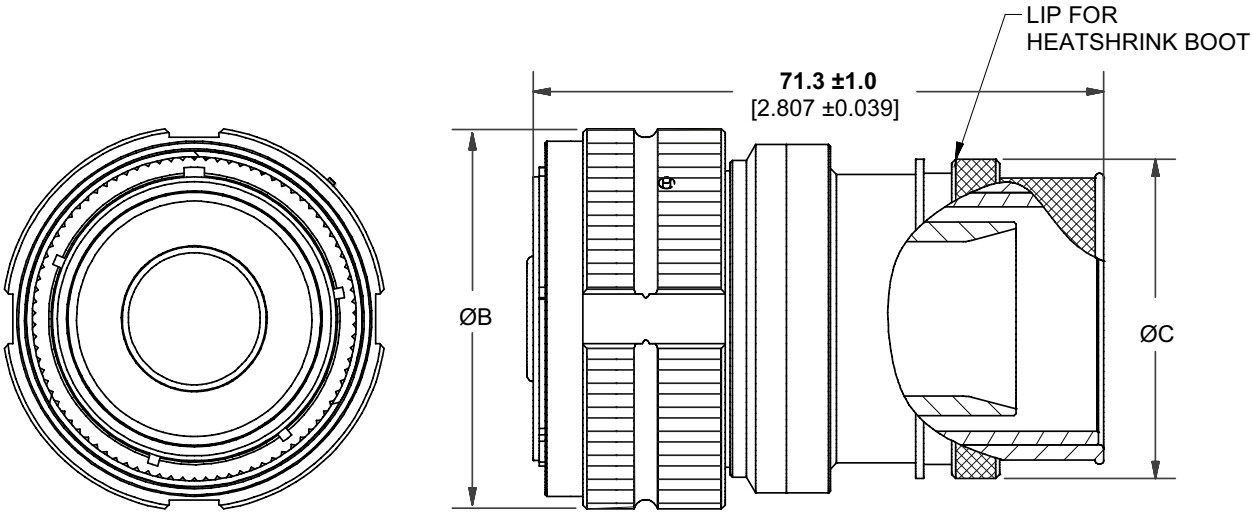


| Shell Size | ØB Max. | ØC Max. |
|---|---|---|
| 19 | **38.50**<br>1.516 | **27.60**<br>1.087 |
| 21 | **41.70**<br>1.642 | **31.10**<br>1.224 |
| 23 | **44.90**<br>1.768 | **36.00**<br>1.417 |
| 25 | **48.00**<br>1.890 | **39.84**<br>1.569 |

**Millimeters** Inches

# POLAMCO High-Power Connectors

## Shielded Right-Angle Plugs

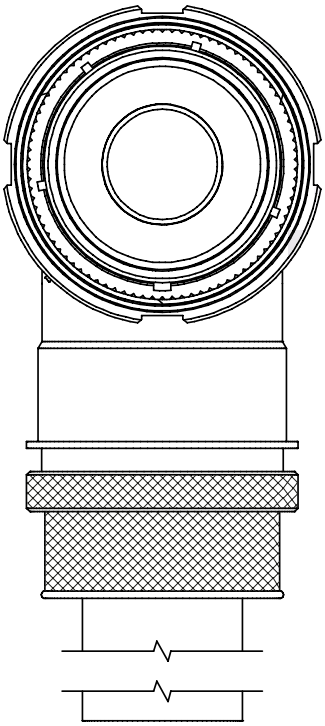

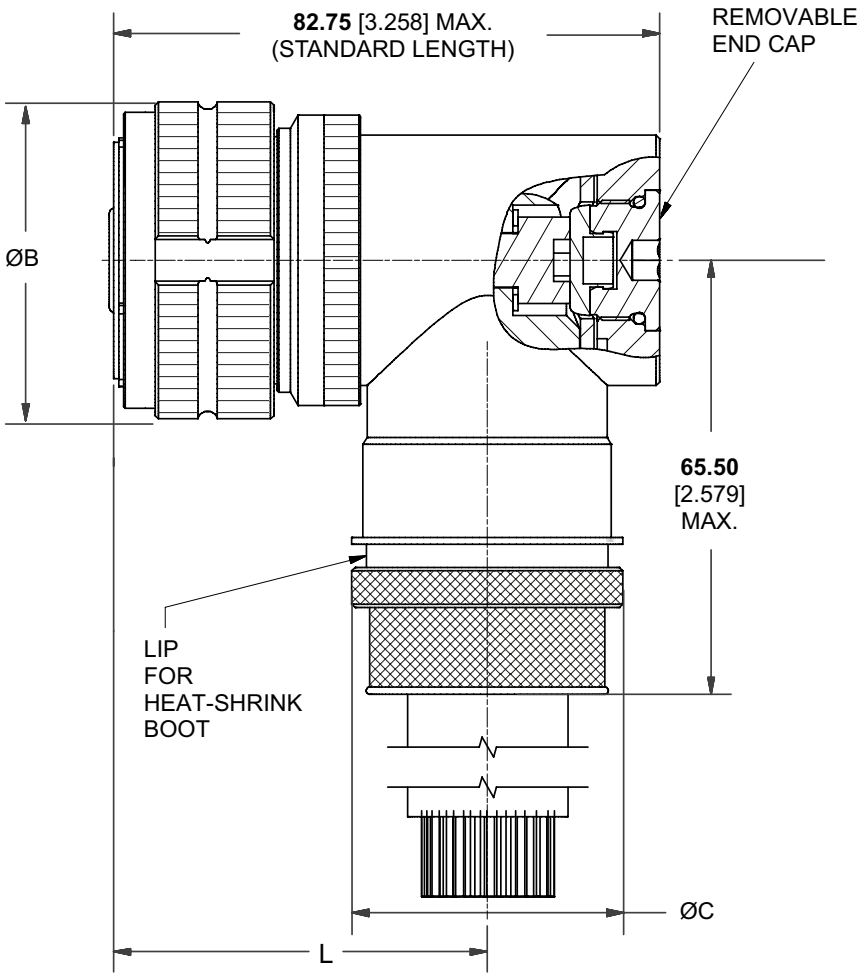


| Shell Size | ØB Max. | ØC Max. | L | |
|---|---|---|---|---|
| | | | Standard | Extended |
| 19 | **38.50**<br>1.516 | **31.60**<br>1.244 | **52.00**<br>2.047 | **98.0**<br>3.858 |
| 21 | **41.70**<br>1.642 | **34.50**<br>1.358 | **54.00**<br>2.126 | **103.0**<br>4.055 |
| 23 | **44.90**<br>1.768 | **38.50**<br>1.516 | **56.00**<br>2.205 | **108.0**<br>4.252 |
| 25 | **48.00**<br>1.890 | **40.64**<br>1.600 | **56.00**<br>2.205 | **112.0**<br>4.409 |

**Millimeters** Inches

# POLAMCO High-Power Connectors

## Shielded Jam Nut Receptacle

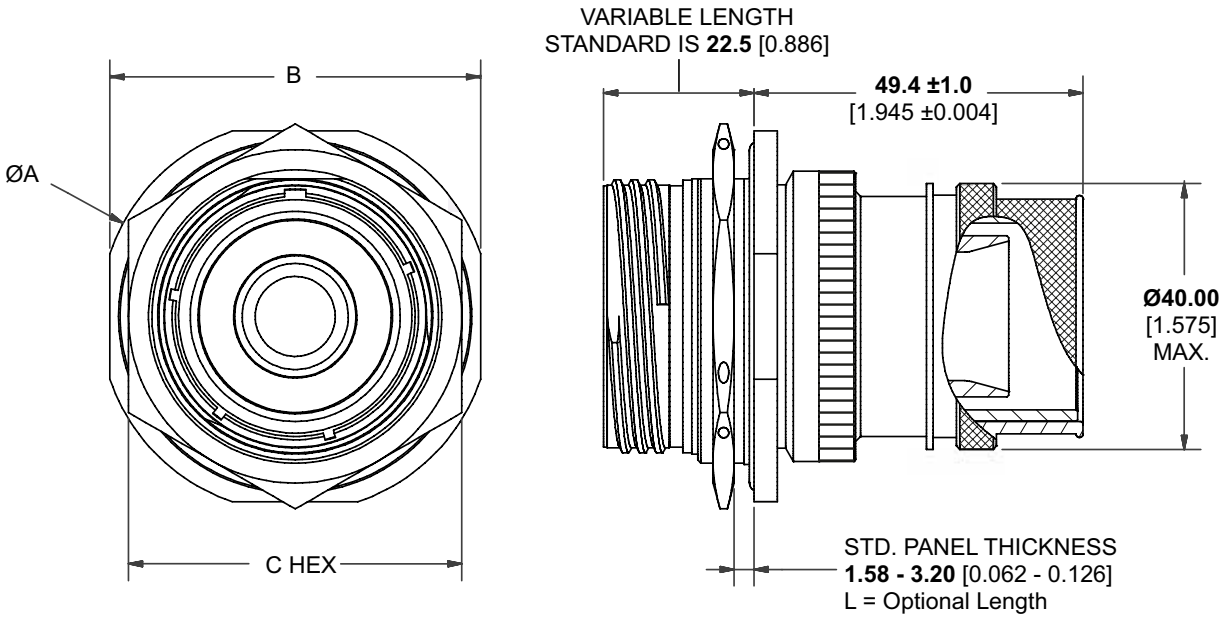


| Shell Size | A | B | C | E | F | G |
|---|---|---|---|---|---|---|
| 19 | **49.20**<br>1.937 | **46.00**<br>1.811 | **40.00**<br>1.575 | **35.18**<br>1.385 | **33.91**<br>1.335 | **27.60**<br>1.087 |
| 21 | **52.40**<br>2.063 | **49.20**<br>1.937 | **43.00**<br>1.693 | **38.35**<br>1.510 | **37.08**<br>1.460 | **31.10**<br>1.224 |
| 23 | **55.60**<br>2.189 | **52.40**<br>2.063 | **46.00**<br>1.811 | **41.53**<br>1.635 | **40.26**<br>1.585 | **36.00**<br>1.417 |
| 25 | **58.70**<br>2.311 | **55.60**<br>2.189 | **50.00**<br>1.969 | **44.70**<br>1.760 | **43.43**<br>1.710 | **39.84**<br>1.569 |

**Millimeters** Inches

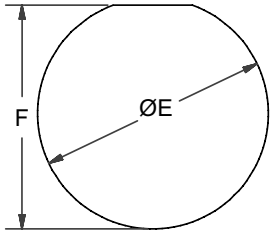


RECOMMENDED PANEL CUTOUT

# POLAMCO High-Power Connectors

## Shielded Square Flange Receptacle

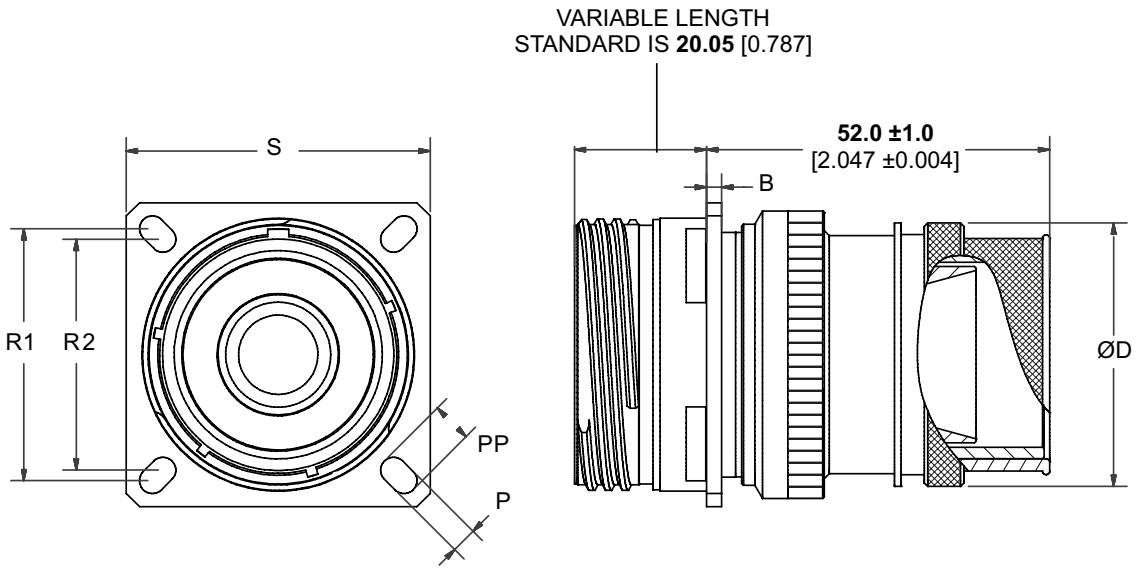


| Shell Size | B | D | P | PP | R1 | R2 | S |
|---|---|---|---|---|---|---|---|
| 19 | **2.30**<br>0.091 | **27.60**<br>1.087 | **3.25**<br>0.128 | **4.93**<br>0.194 | **29.36**<br>1.156 | **26.97**<br>1.062 | **36.50**<br>1.437 |
| 21 | **3.00**<br>0.118 | **31.10**<br>1.224 | **3.25**<br>0.128 | **4.93**<br>0.194 | **31.75**<br>1.250 | **29.36**<br>1.156 | **39.70**<br>1.563 |
| 23 | **3.00**<br>0.118 | **36.00**<br>1.417 | **3.91**<br>0.154 | **6.15**<br>0.242 | **34.93**<br>1.375 | **31.75**<br>1.250 | **42.90**<br>1.689 |
| 25 | **3.00**<br>0.118 | **39.84**<br>1.569 | **3.91**<br>0.154 | **6.15**<br>0.242 | **38.10**<br>1.500 | **34.93**<br>1.375 | **46.00**<br>1.811 |

**Millimeters** Inches

# POLAMCO High-Power Connectors

## Unshielded Jam Nut Receptacle

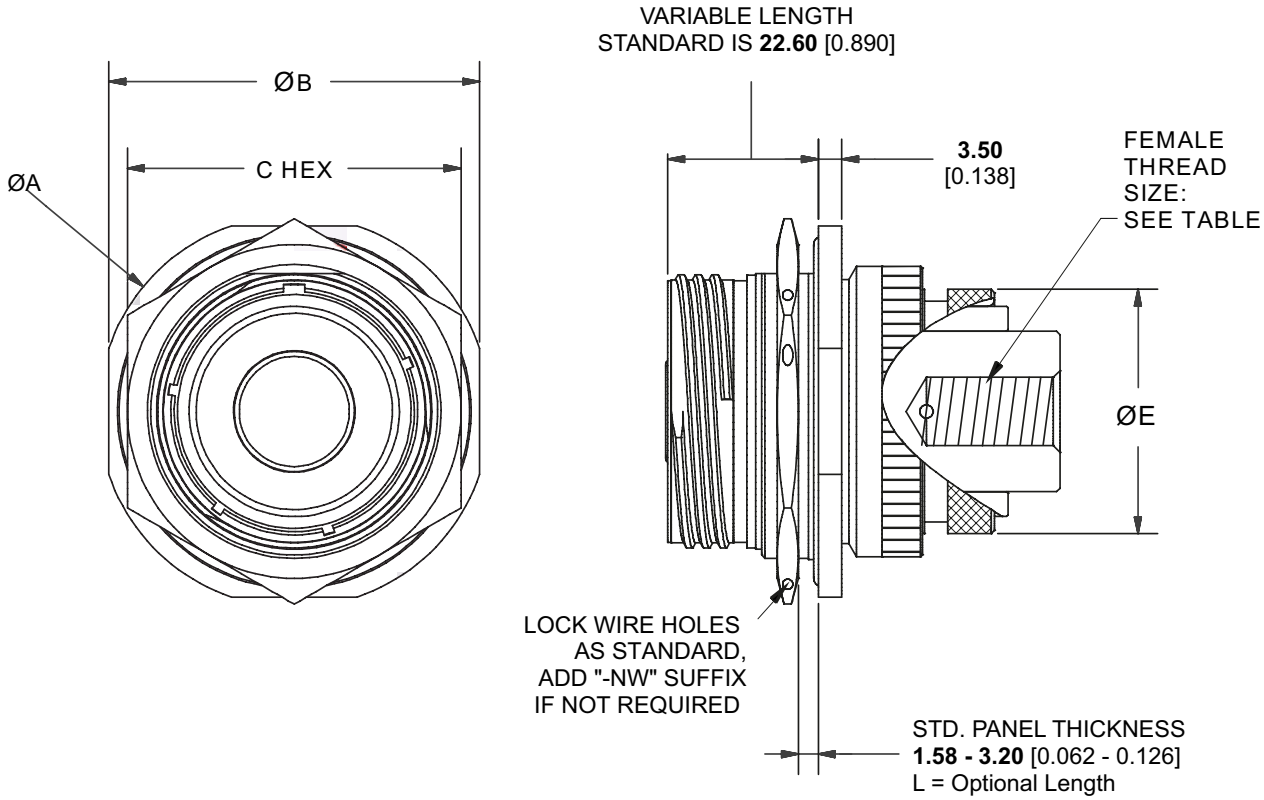


| Shell Size | A | B | C | E | F | G | Female Thread Size |
|---|---|---|---|---|---|---|---|
| 19 | **49.20**<br>1.937 | **46.00**<br>1.811 | **40.00**<br>1.575 | **35.18**<br>1.385 | **26.50**<br>1.043 | **33.91**<br>1.335 | M8 |
| 21 | **52.40**<br>2.063 | **49.20**<br>1.937 | **43.00**<br>1.693 | **38.35**<br>1.510 | **31.00**<br>1.220 | **37.08**<br>1.460 | M10 |
| 23 | **55.60**<br>2.189 | **52.40**<br>2.063 | **46.00**<br>1.811 | **41.53**<br>1.635 | **34.40**<br>1.354 | **40.26**<br>1.585 | M10 |
| 25 | **58.70**<br>2.311 | **55.60**<br>2.189 | **50.00**<br>1.969 | **44.70**<br>1.760 | **36.60**<br>1.441 | **43.43**<br>1.710 | M12 |

**Millimeters** Inches

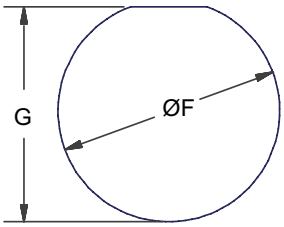


RECOMMENDED
PANEL CUTOUT

# POLAMCO High-Power Connectors

## Unshielded Square Flange Receptacle

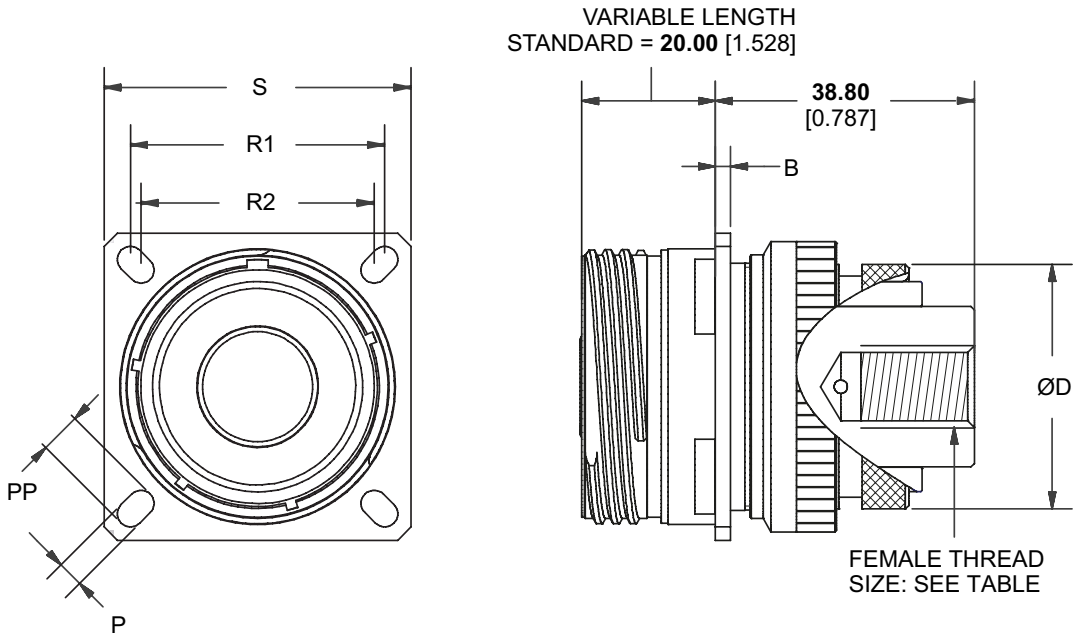


| Shell Size | B | D | P | PP | R1 | R2 | S | Female Thread Size |
|---|---|---|---|---|---|---|---|---|
| **19** | **2.30**<br>0.091 | **27.50**<br>1.043 | **3.25**<br>0.128 | **4.93**<br>0.194 | **29.36**<br>1.156 | **26.97**<br>1.062 | **36.50**<br>1.437 | **M8** |
| **21** | **3.00**<br>0.118 | **31.10**<br>1.224 | **3.25**<br>0.128 | **4.93**<br>0.194 | **31.75**<br>1.250 | **29.36**<br>1.156 | **39.70**<br>1.563 | **M10** |
| **23** | **3.00**<br>0.118 | **34.40**<br>1.354 | **3.91**<br>0.154 | **6.15**<br>0.242 | **34.93**<br>1.375 | **31.75**<br>1.250 | **42.90**<br>1.689 | **M10** |
| **25** | **3.00**<br>0.118 | **36.60**<br>1.441 | **3.01**<br>0.119 | **6.15**<br>0.242 | **38.10**<br>1.500 | **34.93**<br>1.375 | **46.00**<br>1.811 | **M12** |

**Millimeters** Inches

# POLAMCO High-Power Connectors

## Bulkhead Feedthrough Jam Nut Receptacle

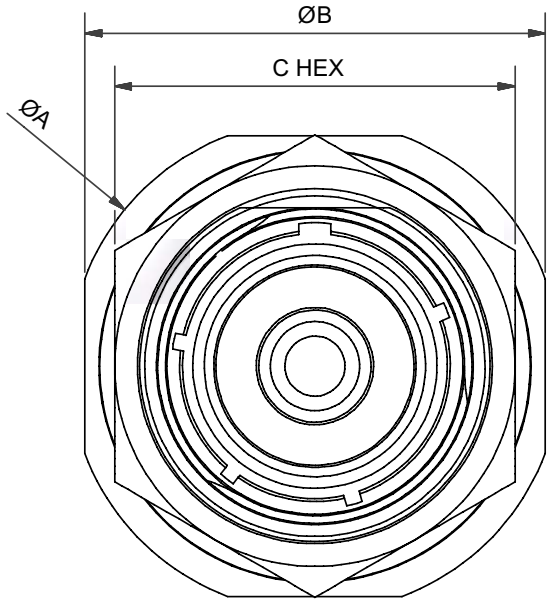


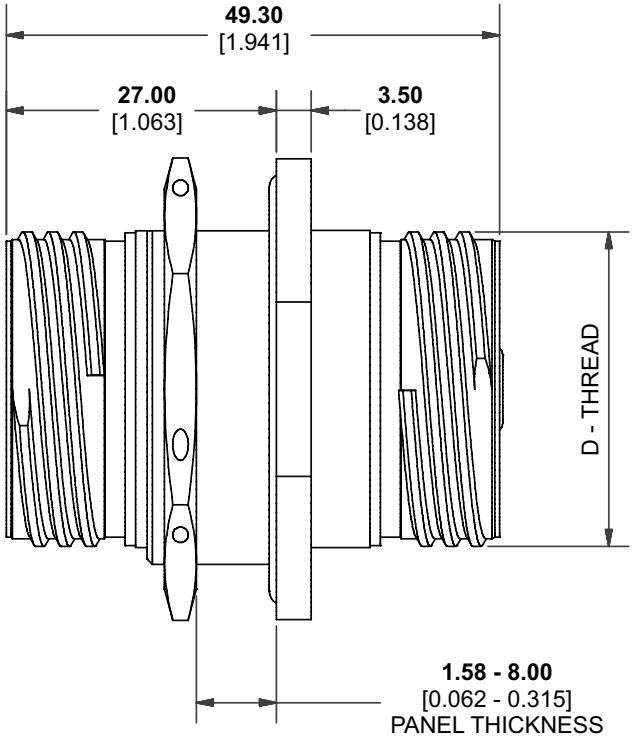


| Shell Size | A | B | C | E | F |
|---|---|---|---|---|---|
| 19 | **49.20**<br>1.937 | **46.00**<br>1.811 | **40.00**<br>1.575 | **35.18**<br>1.385 | **33.91**<br>1.335 |
| 21 | **52.40**<br>2.063 | **49.20**<br>1.937 | **43.00**<br>1.693 | **38.35**<br>1.510 | **37.08**<br>1.460 |
| 23 | **55.60**<br>2.189 | **52.40**<br>2.063 | **46.00**<br>1.811 | **41.53**<br>1.635 | **40.26**<br>1.585 |
| 25 | **58.70**<br>2.311 | **55.60**<br>2.189 | **50.00**<br>1.969 | **44.70**<br>1.760 | **43.43**<br>1.710 |

**Millimeters** Inches

# POLAMCO High-Power Connectors

## Bulkhead Feedthrough Square Flange Receptacle

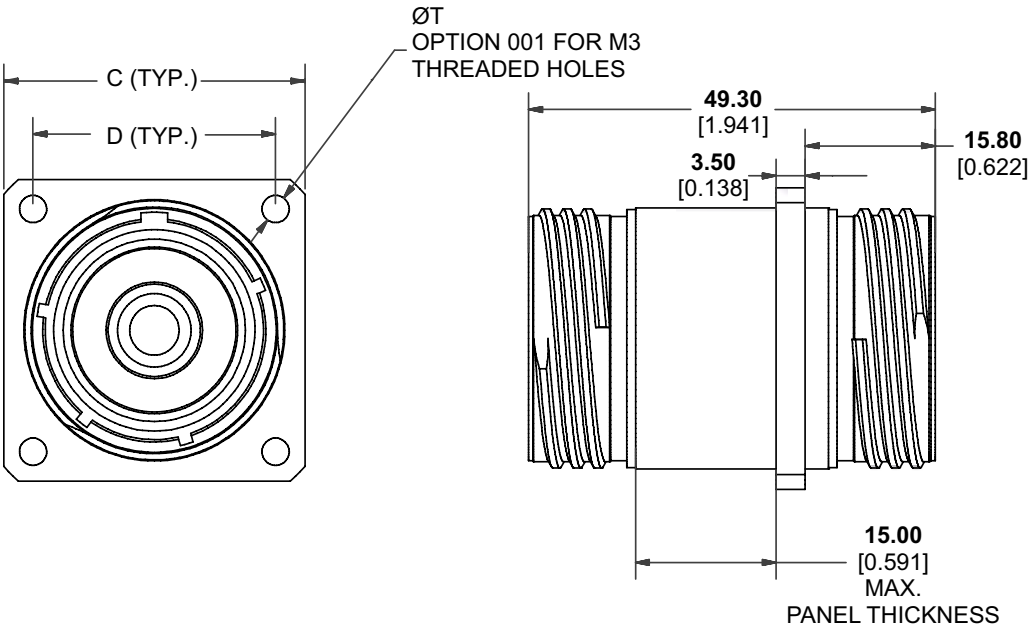


| Shell Size | C | D | H | T |
|---|---|---|---|---|
| 19 | **36.50**<br>1.437 | **29.40**<br>1.157 | **32.94**<br>1.297 | **3.30**<br>0.130 |
| 21 | **39.70**<br>1.563 | **31.80**<br>1.252 | **36.29**<br>1.429 | |
| 23 | **42.90**<br>1.689 | **34.90**<br>1.374 | **39.29**<br>1.547 | |
| 25 | **46.00**<br>1.811 | **38.10**<br>1.500 | **42.47**<br>1.672 | |

**Millimeters** Inches

# POLAMCO High-Power Connectors

## Power Crimp Contacts

### MATERIALS

- **Contact:** Silver-plated copper
- **Insulator:** PPS-GL40, UL94V-0

### PERFORMANCE

- **Voltage Rating:** 1000 VAC / 1410 VDC
- **Current Rating:**
  Shell Size 25: 1000A
  Shell Size 23: 800A
  Shell Size 21: 600A
  Shell Size 19: 400A

### Dimensions

| Crimp Size (CSA, mm²) | øA Max. | |
|---|---|---|
| | Standard Cable | Fine Stranded Cable |
| **50** | **10.00**<br>0.394 | **10.30**<br>0.406 |
| **70** | **11.30**<br>0.445 | **12.10**<br>0.476 |
| **95** | **13.50**<br>0.531 | **14.20**<br>0.559 |
| **120** | **15.20**<br>0.598 | **16.50**<br>0.650 |
| **150** | **16.70**<br>0.657 | **17.60**<br>0.693 |
| **185** | **19.20**<br>0.756 | **19.20**<br>0.756 |
| **240** | **21.10**<br>0.831 | **N/A** |

**Millimeters** Inches

### Maximum Contact Size by Shell Size

| Shell Size | Max. Crimp (CSA, mm²) | |
|---|---|---|
| | Standard Cable | Fine Stranded Cable |
| **19** | 70 | 70 |
| **21** | 120 | 95 |
| **23** | 185 | 150 |
| **25** | 240 | 185 |

### Socket Contact

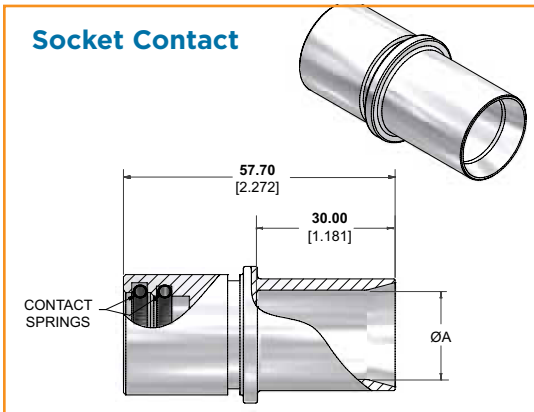


### Pin Contact

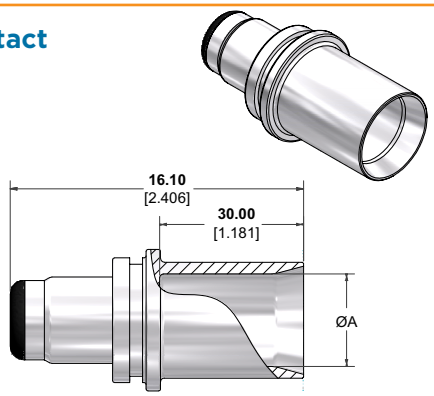


**PC04HP 25 185 FS P 5 V**

**SERIES**

**SHELL SIZE**

**CRIMP SIZE** (CSA)

**CABLE TYPE**
- **S** Standard
- **FS** Fine Strand

**CONTACT TYPE**
- **S** Socket
- **P** Pin
- **H3** 90°

**MATERIAL**
Copper

**FINISH**
Silver Plate

### SAVES SPACE AND WEIGHT

- Standard aluminum alloy or lightweight composite shells
- Low profile backshells
- Long and short shell styles

### RELIABLE PERFORMANCE

- Corrosion resistant
- Thread-on, pull-off interface
- Accommodates various shield braid termination methods

### CONVENIENT

- Fewer parts help provide a simple, more reliable assembly
- Common interfacing capability for the operation and employment of stores
- Mating connector is standard MIL-DTL-38999 Series III receptacle

### QUALIFIED

- MIL-DTL-38999/31 plug connectors (type 3, 4, and 5)
- ACT98 and commercial /29 composite versions also available
- Qualified to Eurofighter JN1034 also available

# DEUTSCH Lanyard-Release Connectors

## 38999 Series III Plug Connectors for MIL-STD-1760 Aircraft/Store Electrical Interconnection Systems

DEUTSCH lanyard-release plugs are high-reliability electrical interconnections featuring common interfacing capability for the operation and employment of stores on aircraft.

Advanced aluminum and composite technology applied to mission-critical MIL-STD-1760 (AEIS) systems helps ensure higher performance in terms of corrosion resistance, weight savings, and durability.

Our lanyard-release connectors provide reliable interfaces for controlling and monitoring aircraft stores and other aircraft subsystems. With a variety of high-performance accessories, we help reduce assembly time, increase cost savings, and accommodate the severe environment of the MIL-STD-1760 system.

### MATERIALS

- **Shell:** Composite or aluminum alloy
- **Finish:** Olive drab cadmium or electroless nickel
- **Lanyard Ring:** Black anodized aluminum alloy
- **Lanyard Cover:** PTFE, natural
- **Lanyard:** Aramid yarn, natural
- **Snap Rings and Wafer Spring:** Passivated stainless steel
- **Resilient Insert:** Silicone elastomer
- **Plastic Inserts:** Thermoplastic

### ENVIRONMENTAL/MECHANICAL

- **Temperature:** -55°C to +175°C
- **Durability:** 500 mating cycles
- **Vibration:** As per MIL-DTL-38999
- **Thermal Shock:** As per MIL-DTL-38999

Contact TE for the latest information and design specifications.

### SPACE AND WEIGHT SAVINGS

- Almost double the contact density of MIL-DTL-38999 connectors
- Lightweight materials

### RUGGED

- Threaded anti-vibration coupling
- Scoop-proof interface
- Aggressive fluid resistance and dust ingress prevention

### RELIABLE

- Fully sealed cable and mating interface
- EMI screening as per MIL-DTL-38999 Series III
- RFI mating interface band

### VERSATILE

- Multiple keying options
- Various plating and material options
- Backshell or cable braid/boot rear feature that help eliminate need for backshell
- Rear-removable crimp and PCB contacts (consult TE for PCB details)

# DEUTSCH Wildcat 38999-Style Connectors

## Higher Contact Densities in a Familiar MIL-DTL-38999 Form Factor

Combine high reliability and high contact density in a familiar MIL-DTL-38999 format with Wildcat 38999 connectors. With higher contact density than mil-spec high-density inserts and nearly double the contact density of standard inserts, Wildcat 38999 connectors offer extreme temperature, vibration, and corrosion resistance, and durability of 500 mating cycles in a space-saving design.

The easy-grip coupling ring and triple-start thread make mating and unmating fast and simple.

A variety of material and plating options means versatile choices to match the demands of your application.

### ELECTRICAL

- **Dielectric Withstand Voltage:** 1000 VAC
- **Current Rating:** 3 amps/contact

### ENVIRONMENTAL

- **Temperature:**
  -65°C to +175°C (cadmium)
  -65°C to +200°C (nickel)
- **Durability:** 500 mating cycles min.
- **Vibration:** MIL-DTL-38999 Series III
- **Thermal Shock:** MIL-DTL-38999 Series III
- **Shock:** 300 g, 3 ms in 3 axes
- **Fluid resistance:** Withstands a wide range of military and aerospace fluids
- **Salt spray resistance:**
  500 hours (cadmium finish) per MIL-STD-1344 Method 100 B and NFC93422.
  48 hours (nickel finish)
- **Sealing:** Up to 30,000 m/100,000 ft. altitude

## MATERIALS

- **Shell and Coupling Ring:** Aerospace grade aluminum alloy as standard
- **Plating:** Olive drab cadmium, RoHS electroless nickel, black zinc nickel (other finishes available on request)
- **Seals:** Fluorinated silicone
- **Insulators:** High-performance thermoplastic
- **Contacts:** Gold-plated machined copper alloy
- **Wire Size:** 28 to 24 AWG

## Wildcat 38999-Style Connectors

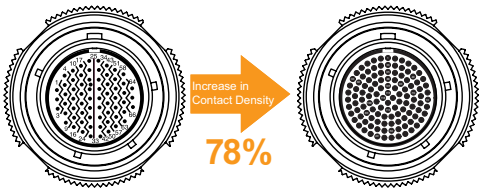


**MIL-DTL-38999**
Insert 19-35
66 Contacts, Size 22

**Wildcat 38999**
Insert 19-118
118 Contacts, Size 24

| MIL-DTL-38999 | | | | DEUTSCH Wildcat 38999 | |
|---|---|---|---|---|---|
| Standard Density Size 22D Contacts | | High Density Size 23 Contacts | | High Density Size 24 Contacts | |
| **Insert** | **No. of Contacts** | **Insert** | **No. of Contacts** | **Insert** | **No. of Contacts** |
| 9-35 | 6 | 9-23 | 9 | 09-11 | 11 |
| 11-35 | 13 | 11-23 | 19 | 11-23 | 23 |
| 13-35 | 22 | 13-23 | 32 | 13-41 | 41 |
| 15-35 | 37 | 15-23 | 55 | 15-64 | 64 |
| 19-35 | 66 | 19-23 | 88 | 19-118 | 118 |

### Square Flange Receptacle: Shell Type 0

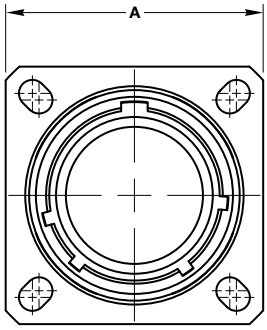


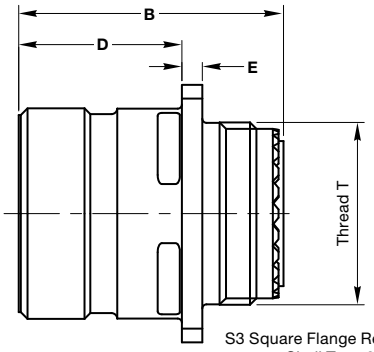


S3 Square Flange Receptacle
Shell Type 20

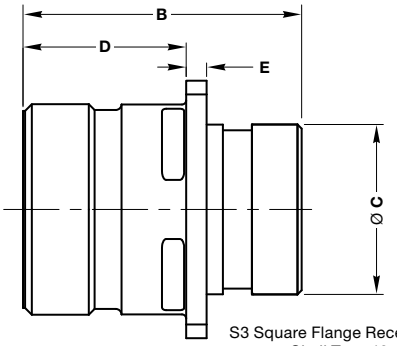


S3 Square Flange Receptacle
Shell Type 10

### Square Flange Receptacle with Accessory Thread

| Shell Size | A Max. | B Max. | D Max. | E Max. | Thread 'T' |
|---|---|---|---|---|---|
| 09 | **24.00** .945 | **31.55** 1.242 | **19.90** .783 | **2.50** .098 | M12 x 1.0–6g |
| 11 | **26.40** 1.039 | | | | M15 x 1.0–6g |
| 13 | **28.90** 1.138 | | | | M18 x 1.0–6g |
| 15 | **31.30** 1.232 | | | | M22 x 1.0–6g |

**Millimeters** Inches

Consult TE for further information on 19-118 connectors

### Square Flange Receptacle with Knurled Rear

| Shell Size | A Max. | B Max. | C Max. | D Max. | E Max. |
|---|---|---|---|---|---|
| 09 | **24.00** .945 | **33.80** 1.331 | **11.30** .445 | **19.90** .783 | **2.50** .098 |
| 11 | **26.40** 1.039 | | **14.35** .565 | | |
| 13 | **28.90** 1.138 | | **17.50** .689 | | |
| 15 | **31.30** 1.232 | | **20.65** .813 | | |

**Millimeters** Inches

Consult TE for further information on 19-118 connectors

# Wildcat 38999-Style Connectors

## Square Flange Receptacle Panel Cutouts

| Shell Size | ØX | | Y | |
|---|---|---|---|---|
| | Front Mount | Rear Mount | Max. | Min. |
| 09 | **13.11**<br>.516 | **16.66**<br>.656 | **18.26**<br>.719 | **15.09**<br>.594 |
| 11 | **15.08**<br>.594 | **22.22**<br>.875 | **20.26**<br>.798 | **18.26**<br>.719 |
| 13 | **19.05**<br>.750 | **23.42**<br>.922 | **23.01**<br>.906 | **20.62**<br>.812 |
| 15 | **23.01**<br>.906 | **26.59**<br>1.047 | **24.61**<br>.969 | **23.01**<br>.906 |

**Millimeters** Inches

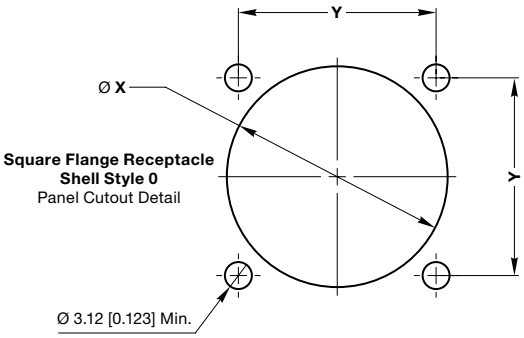


## Jam Nut Receptacle: Shell Type 4

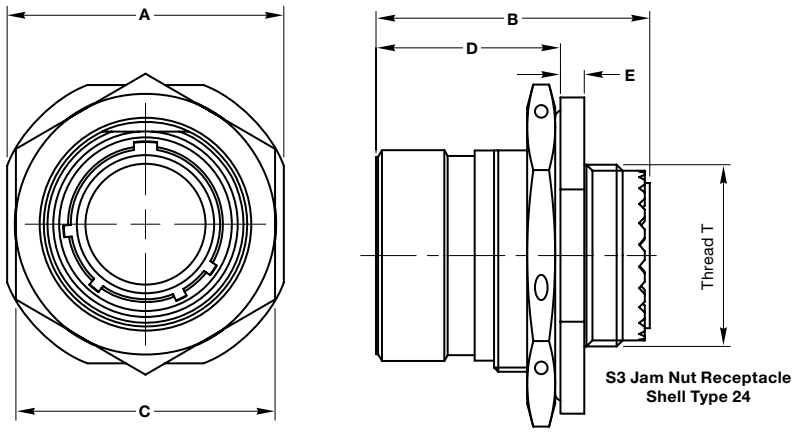


| Shell Size | A Max. | B Max. | C Max. | D Max. | E Max. | Thread 'T' |
|---|---|---|---|---|---|---|
| 09 | **27.20**<br>1.071 | **32.55**<br>1.281 | **23.25**<br>.915 | **22.40**<br>.882 | **2.95**<br>.116 | M12x1.0-6g |
| 11 | **32.00**<br>1.260 | | **26.30**<br>1.035 | | | M15x1.0-6g |
| 13 | **35.10**<br>1.382 | | **32.00**<br>1.260 | | | M18x1.0-6g |
| 15 | **38.30**<br>1.508 | | **36.00**<br>1.417 | | | M22x1.0-6g |

**Millimeters** Inches

Consult TE for further information on 19-118 connectors

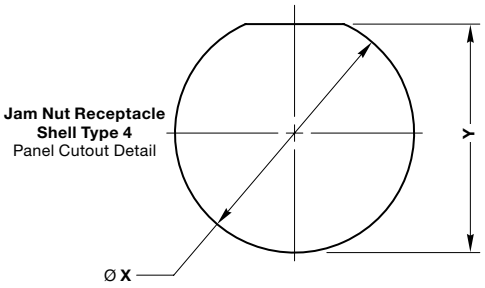


Panel Thickness = 3.00 [0.118] Max.

# Wildcat 38999-Style Connectors

## Jam Nut Receptacle Panel Cutouts

| Shell Size | ØX (±.01) | Y (±.01) |
|---|---|---|
| 09 | **17.80**<br>.700 | **16.89**<br>0.665 |
| 11 | **20.98**<br>.826 | **19.43**<br>.765 |
| 13 | **25.68**<br>1.011 | **24.16**<br>.951 |
| 15 | **28.90**<br>1.138 | **27.43**<br>1.080 |

**Millimeters** Inches

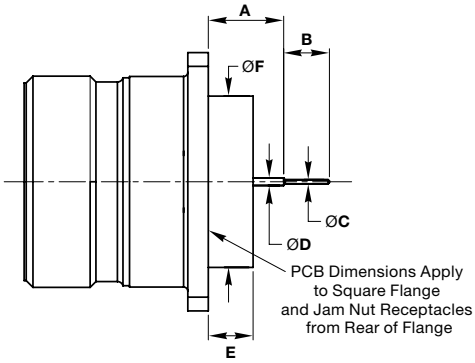


## PCB Tail Dimensions

| Layout | Part No. Option Code | Shell Accessory | Part No. | | A | | B Max. | ØC Max. | ØD Max. | E Max. | ØF Max. | |
|---|---|---|---|---|---|---|---|---|---|---|---|---|
| | | | Pins | Sockets | Max. | Min. | | | | | Shell Size | SØ Max. |
| 09–11<br>11–23<br>13–41<br>15–64<br>19–118 | -151 | W320 | 611624-31 | 611625 | **11.73**<br>.462 | **10.73**<br>.422 | **5.55**<br>.219 | **.60**<br>.024 | **1.00**<br>.039 | **5.74**<br>.226 | 09 | **11.07**<br>.436 |
| | -151 | W324 | 611556-31 | 611627 | **9.73**<br>.383 | **8.73**<br>.344 | **5.55**<br>.219 | **.60**<br>.024 | **1.00**<br>.039 | **5.74**<br>.226 | 11 | **14.33**<br>.564 |
| | -151 | W330 | Potted | Potted | **9.73**<br>.383 | **8.73**<br>.344 | **5.55**<br>.219 | **.60**<br>.024 | **1.00**<br>.039 | **5.74**<br>.226 | 13 | **17.42**<br>.686 |
| | -151 | W334 | Potted | Potted | **6.73**<br>.265 | **5.73**<br>.226 | **5.55**<br>.219 | **.60**<br>.024 | **1.00**<br>.039 | **5.74**<br>.226 | 15 | **20.57**<br>.810 |

**Millimeters** Inches

## Free Plug: Shell Type 6

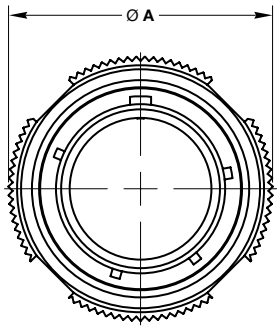


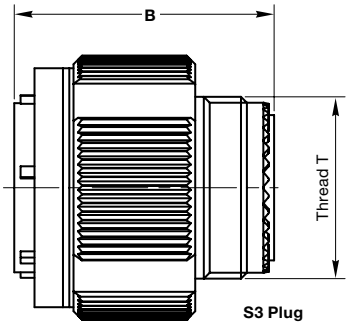


**S3 Plug Shell Style 26**

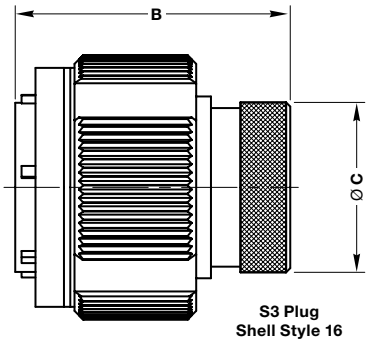


**S3 Plug Shell Style 16**

## Plug with Accessory Thread

| Shell Size | øA Max. | B Max. | Thread 'T' |
|---|---|---|---|
| 09 | **21.30**<br>.839 | **31.10**<br>1.224 | M12x1.0–6g |
| 11 | **23.75**<br>.935 | | M15x1.0–6g |
| 13 | **29.10**<br>1.146 | | M18x1.0–6g |
| 15 | **32.30**<br>1.272 | | M22x1.0–6g |

**Millimeters** Inches

Consult TE for further information on 19-118 connectors

## Plug with Knurled Rear

| Shell Size | øA Max. | B Max. | øC Max. |
|---|---|---|---|
| 09 | **21.30**<br>.839 | **33.30**<br>1.311 | **11.30**<br>.445 |
| 11 | **23.75**<br>.935 | | **14.35**<br>.565 |
| 13 | **29.10**<br>1.146 | | **17.50**<br>.689 |
| 15 | **32.30**<br>1.272 | | **27.00**<br>1.063 |

**Millimeters** Inches

Consult TE for further information on 19-118 connectors

# Wildcat 38999-Style Connectors

## CONTACTS

| Contact | | Current Rating | Wire Size (AWG) | Conductor | | Wire Sealing Range | |
|---|---|---|---|---|---|---|---|
| Pin | Socket | | | Min. Ø | Max. Ø | Min. Ø | Max. Ø |
| 605719-31 | 605721 | 3 A | 24–28 | **.254**<br>.010 | **.511**<br>.020 | **.600**<br>.024 | **.96**<br>.038 |

**Millimeters** Inches

Filler Plug: Part No. 800300-24

## TOOLING

| Ins/Ext Tool | Crimp Tool | Positioner | |
|---|---|---|---|
| | | Pin | Socket |
| 605837 | M22520/<br>2-01 | 610286 | 610287 |

### Contact Arrangement

(Viewed from the mating face of a connector with male (pin) contacts)

**Shell Size 09**

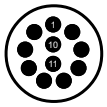

09–11

**Shell Size 11**

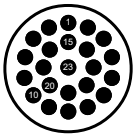

11–23

**Shell Size 13**

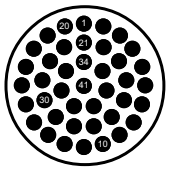

13–41

**Shell Size 15**

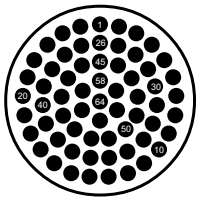

15–64

**Shell Size 19**

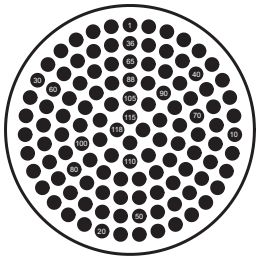

19–118

## ACCESSORIES

### Protective Caps and Backshells

Wildcat 38999 connectors are compatible with MIL-DTL-38999 Series III style backshells and procaps or equivalent.

### Raychem Heat-Shrink Boots

| Shell Size | Straight Boot | 90° Boot |
|---|---|---|
| 09 | 202K121 | 222K121 |
| 11 | 202K132 | 222K121 |
| 13 | 202K142 | 222K132 |
| 15 | 202K142 | 222K142 |
| 19 | 202K153 | 222K152 |

### CRES-Lock Bandstraps

**Easy to Use**

- Quick, easy, cost-effective and reliable termination of braided shielding

**High Performance**

- Low profile, one-piece design helps eliminate EMI leakage paths

**Rugged**

- Shock, vibration and environmental performance to help meet aerospace and defense requirements

## Wildcat 38999-Style Connectors

### ORDERING INFORMATION

**PART NUMBERING SYSTEM** W3 1 6 T W 09–11 S N - ****

**SERIES**
Wildcat 38999

**SHELL REAR ACCESSORY**
- **1** Braid and Boot Mounting Feature
- **2** Rear Accessory Thread, Anti-rotation Teeth
- **3** No Accessory (e.g., Box Mount)

**SHELL TYPE**
- **0** Square Flange Receptacle
- **4** Jam Nut Receptacle
- **6** Free Plug
- **7** Reduced Jam Nut Flange Receptacle

**COUPLING TYPE**
- **T** Triple-start ACME Thread
- **B** Bayonet (Consult TE on Availability)

**CLASS CODE**
- **W** Aluminum with Olive Drab Cadmium
- **F** Aluminum with Electroless Nickel
- **Z** Aluminum with Black Zinc Nickel
- **K** Stainless Steel

**SHELL SIZE—INSERT ARRANGEMENT**
- **09–11** Shell Size 9, 11 Way
- **11–23** Shell Size 11, 23 Way
- **13–41** Shell Size 13, 41 Way
- **15–64** Shell Size 15, 64 Way
- **19–118** Shell Size 19, 118 Way (Consult TE on Availability)

**CONTACT TYPE**
- **P** Pin (Male)
- **S** Socket (Female)

**KEYING**
- **N** Normal
- **U** Universal
- **A, B, C, D, E**

**OPTION CODE *(3 DIGITS)* OR MODIFICATION CODE**
- **090** Supplied without Contacts
- **51** PCB Contacts

**VERSATILE**

- Medium and high-density arrangements
- 12 shell sizes and up to 128 contacts
- 100% scoop proof design

**RELIABLE**

- Elastomer interface and wire seals
- RFI fingers at mating interface and 360º backshell
- Hard face socket insert
- Contact retention mechanism integral to insert

**CONVENIENT**

- Simple assembly techniques with standard tooling
- Standard MIL-C-39029 contacts
- Positive bayonet locking serrations

## 38999-Style HDJ Series Connectors

### DEUTSCH HDJ/JN1003 Medium and High Density Connectors

The HDJ Series connectors are bayonet coupling connectors specifically designed for Eurofighter use. The range comprises plugs, receptacles, and cable accessories.

The series is intermateable and intermountable with connectors conforming to LN29729, EN3372, VG 96912 and the DEUTSCH AS range. The connectors are qualified in accordance with J 62.017.

The connectors are based on MIL-DTL-38999 Series I coupling interface lengths and Series II diameters.

## Specifications

### MATERIALS

- **Shell:** Aluminum alloy, plated olive drab cadmium
- **RFI Ring:** Beryllium copper, plated nickel/cadmium
- **Inserts:** Thermoplastic and fluorinated silicone elastomer
- **Contacts:** Copper alloy, plated gold

### MECHANICAL

- **Vibration:** Per J62.017 para. 2.11
- **Durability:** 500 mating cycles

### ENVIRONMENTAL

- **Service Temperature:** -55° C to +175° C
- **Thermal Shock:** As per J62.017 para. 2.4
- **Sealing:** Up to 30,000 m (100,000 ft.) altitude
- **Salt Spray Resistance:** per MIL-DTL-38999

# 38999-Style HDJ Series Connectors

## ELECTRICAL

- **Insulation Resistance:** ≥100,000 MΩ @ 20°C
- **Contact Current Rating:**
  Size 22: 5 A
  Size 20: 7.5 A
  Size 16: 13 A
  Size 12: 23 A
  Size 8

### Dielectric Withstand Voltage

| Rating Class | Dielectric Withstand Voltage ($VAC_{rms}$) | |
|---|---|---|
| | Sea Level | 22,000 m (70,000 ft.) |
| M | 1300 | 800 |
| N | 1000 | 600 |
| I | 1800 | 1000 |
| II | 2300 | 1000 |

### Part Numbering
**DEUTSCH Series**

**HDJ 07 14 - 35 P N - ***

**CONNECTOR SERIES**

**SHELL STYLE**
**00** Square Flange Receptacle
**01H** Hermetic
**02** Box Mount
**03** Bulkhead Receptacle
**06** Free Plug with Grounding Fingers
**07** Jam Nut Receptacle

**SHELL SIZE**

**INSERT ARRANGEMENT**

**MODIFICATION**
**Without Suffix** With Contacts
**090** Without Contacts

**ORIENTATION**
**N, A, B, C, D**
(N and A only for Style 03)
(N, A and D only for Size 8)

**CONTACT TYPE**
**P** Pin
**S** Socket
(for Style 03 use 'PS' designator)

### Part Numbering
**Eurofighter Series**

**JN 1003 A 14 - 35 P N - ***

**CONNECTOR SERIES**

**SHELL STYLE**
**A** Jam Nut
**B** Square Flange Receptacle
**FG** Free Plug with Grounding Fingers
**H** Box Mount

**SHELL SIZE**

**INSERT ARRANGEMENT**

**MODIFICATION**
**Without Suffix** Without Contacts
**1** With Contacts

**ORIENTATION**
**N, A, B, C, D**
(N and A only for Style 03)
(N, A and D only for Size 8)

**CONTACT TYPE**
**P** Pin
**S** Socket

# 38999-Style HDJ Series Connectors

## Square Flange Receptacle – Shell Style OO (JN 1003 Style B)

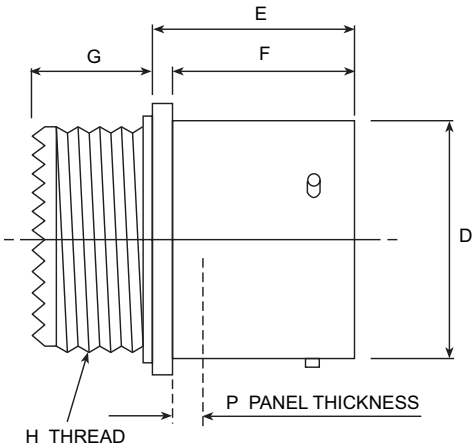


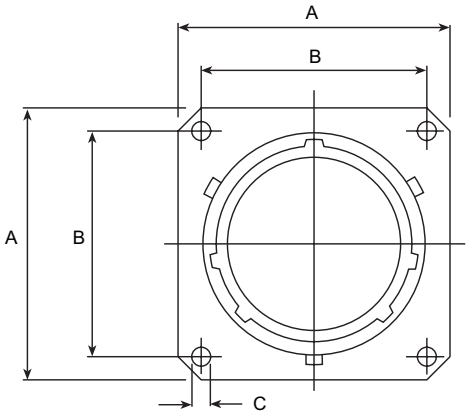


| Shell Size | A ±0.40 (±0.016) | B ±0.13 (±0.005) | C ±0.10 (±0.004) | D +0/-0.13 (+0/-0.005) | E +0.15 (+0.016) Max. | F +0/-0.13 (+0/-0.005) | G Max. | H Thread UNEF Class 2a | P Max. |
|---|---|---|---|---|---|---|---|---|---|
| 08 | **20.62** 0.812 | **15.10** 0.594 | | **12.00** 0.472 | | | | 0.4375 – 28 | |
| 10 | **23.83** 0.938 | **18.30** 0.720 | | **15.00** 0.591 | | | | 0.5625 – 24 | |
| 12 | **26.19** 1.031 | **20.60** 0.811 | | **19.05** 0.750 | | | | 0.6875 – 24 | |
| 14 | **28.57** 1.125 | **23.00** 0.906 | | **22.22** 0.875 | | **16.05** 0.632 | | 0.8125 – 20 | |
| 16 | **30.96** 1.219 | **24.60** 0.969 | **3.20** 0.126 | **25.40** 1.000 | | | | 0.9375 – 20 | **3.00** 0.118 |
| 18 | **33.32** 1.312 | **27.00** 1.063 | | **28.57** 1.125 | **18.21** 0.717 | | **14.00** 0.551 | 1.0625 – 18 | |
| 20 | **36.53** 1.438 | **29.40** 1.157 | | **31.75** 1.250 | | | | 1.1875 – 18 | |
| 22 | **39.67** 1.562 | **31.80** 1.252 | | **34.92** 1.375 | | **15.29** 0.602 | | 1.3125 – 18 | |
| 24 | **42.90** 1.689 | **34.90** 1.374 | **3.70** 0.146 | **38.10** 1.500 | | | | 1.4375 – 18 | **2.26** 0.089 |

**Millimeters** Inches

| Shell Size | 08 | 10 | 12 | 14 | 16 | 18 | 20 | 22 | 24 |
|---|---|---|---|---|---|---|---|---|---|
| W ± 0.2 | **13.7** 0.539 | **16.9** 0.665 | **21.0** 0.827 | **24.2** 0.953 | **27.3** 1.075 | **30.5** 1.201 | **33.7** 1.327 | **36.9** 1.453 | **40.0** 1.575 |
| Z ± 0.2 | **15.1** 0.594 | **18.3** 0.720 | **20.6** 0.811 | **23.0** 0.906 | **24.6** 0.969 | **27.0** 1.063 | **29.4** 1.157 | **31.8** 1.252 | **34.9** 1.374 |
| Y | **28.0** 1.102 | **31.0** 1.220 | **36.0** 1.417 | **41.0** 1.614 | **43.0** 1.693 | **46.0** 1.811 | **53.0** 2.087 | **58.0** 2.283 | **61.0** 2.402 |

**Millimeters** Inches

**Panel Cutout**

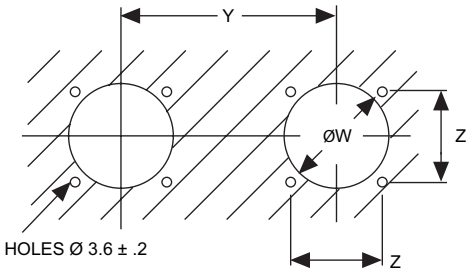

# 38999-Style HDJ Series Connectors

## Jam Nut Receptacle - Shell Style 07 (JN 1003 Style A)

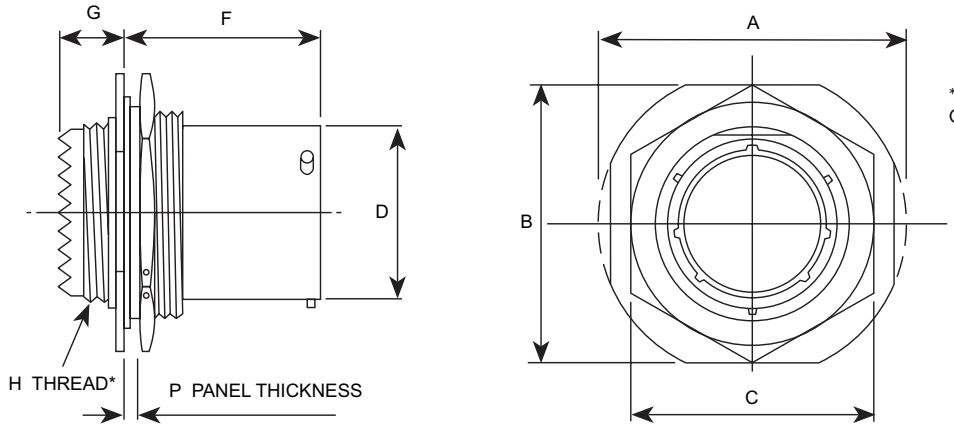


*H Thread VG 96912 Style - Consult TE for availability.

| Shell Size | A Max. | B ±0.41 (±0.016) | C ±0.43/-0.41 (±0.017/-0.016) | D +0/-0.13 (+0/-0.005) | F +0.13 (+0.005) | G Max. | P | H Thread UNEF Class 2a |
|---|---|---|---|---|---|---|---|---|
| 08 | **27.38** 1.078 | **23.83** 0.938 | **19.05** 0.750 | **12.00** 0.472 | | | | 0.4375 – 28 |
| 10 | **30.56** 1.203 | **26.97** 1.062 | **22.22** 0.875 | **15.00** 0.591 | | | | 0.5625 – 24 |
| 12 | **35.33** 1.391 | **31.75** 1.250 | **26.97** 1.062 | **19.05** 0.750 | | | | 0.6875 – 24 |
| 14 | **38.51** 1.516 | **34.92** 1.375 | **30.18** 1.188 | **22.22** 0.875 | | | **3.20** 0.126 Max | 0.8125 – 20 |
| 16 | **41.68** 1.641 | **38.10** 1.500 | **33.32** 1.312 | **25.40** 1.000 | **23.24** 0.915 | **14.10** 0.555 | | 0.9375 – 20 |
| 18 | **44.86** 1.766 | **41.27** 1.625 | **36.53** 1.438 | **28.57** 1.125 | | | **1.60** 0.063 Max | 1.0625 – 18 |
| 20 | **49.61** 1.953 | **46.02** 1.812 | **39.67** 1.562 | **31.75** 1.250 | | | | 1.1875 – 18 |
| 22 | **52.78** 2.078 | **49.23** 1.938 | **42.88** 1.688 | **34.92** 1.375 | | | | 1.3125 – 18 |
| 24 | **55.96** 2.203 | **52.37** 2.062 | **46.02** 1.812 | **38.10** 1.500 | | | | 1.4375 – 18 |

**Millimeters** Inches

| Shell Size | 08 | 10 | 12 | 14 | 16 | 18 | 20 | 22 | 24 |
|---|---|---|---|---|---|---|---|---|---|
| W ± 0.10 | **14.53** 0.572 | **17.7** 0.697 | **22.5** 0.886 | **25.7** 1.012 | **28.83** 1.135 | **32.01** 1.260 | **35.18** 1.385 | **38.36** 1.510 | **41.53** 1.635 |
| Z ± 0.2 | **13.62** 0.536 | **16.79** 0.661 | **21.0** 0.827 | **24.08** 0.948 | **27.23** 1.072 | **30.41** 1.197 | **33.58** 1.322 | **36.95** 1.455 | **39.93** 1.572 |
| Y | **28.0** 1.102 | **31.0** 1.220 | **36.0** 1.417 | **41.0** 1.614 | **43.0** 1.693 | **46.0** 1.811 | **53.0** 2.087 | **58.0** 2.283 | **61.0** 2.402 |

**Millimeters** Inches

**Panel Cutout**

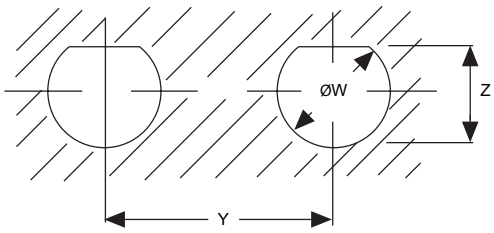

# 38999-Style HDJ Series Connectors

## Box Mount-Shell Style 02 (JN 1003 Style H)

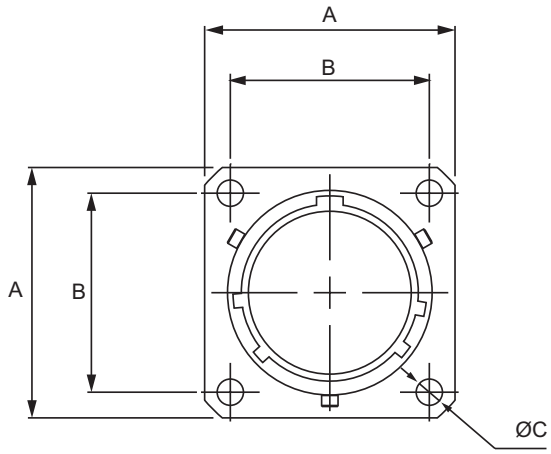


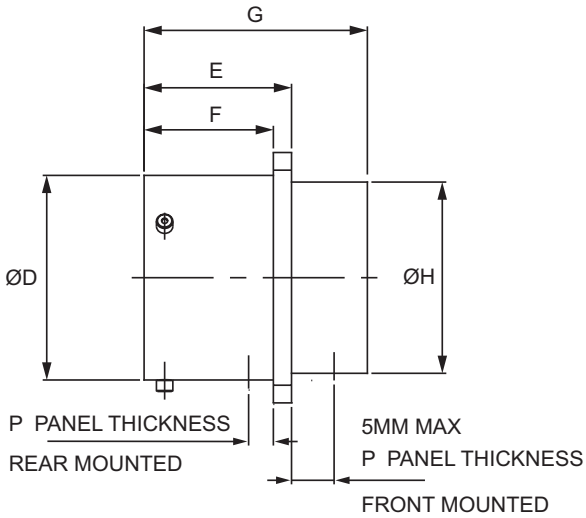


| Shell Size | A ±0.40 (±0.016) | B ±0.13 (±0.005) | ØC Min. | ØD +0.00/-0.13 (+0.00/-0.005) | E +0.15 (+0.016) Max. | F +0.00/-0.13 (+0.00/-0.005) | G Max. | ØH Max. | P Max. |
|---|---|---|---|---|---|---|---|---|---|
| 08 | **20.62**<br>0.812 | **15.10**<br>0.594 | | **12.00**<br>0.472 | | | | **11.91**<br>0.469 | |
| 10 | **23.83**<br>0.938 | **18.30**<br>0.720 | | **15.00**<br>0.591 | | | | **15.09**<br>0.594 | |
| 12 | **26.19**<br>1.031 | **20.60**<br>0.811 | | **19.05**<br>0.750 | | | | **18.26**<br>0.719 | |
| 14 | **28.57**<br>1.125 | **23.00**<br>0.906 | | **22.22**<br>0.875 | | **16.05**<br>0.632 | | **21.44**<br>0.844 | |
| 16 | **30.96**<br>1.219 | **24.60**<br>0.969 | **3.20**<br>0.126 | **25.40**<br>1.000 | **18.21**<br>0.717 | | **27.65**<br>1.089 | **24.61**<br>0.969 | **3.00**<br>0.118 |
| 18 | **33.32**<br>1.312 | **27.00**<br>1.063 | | **28.57**<br>1.125 | | | | **27.38**<br>1.078 | |
| 20 | **36.53**<br>1.438 | **29.40**<br>1.157 | | **31.75**<br>1.250 | | | | **30.56**<br>1.203 | |
| 22 | **39.67**<br>1.562 | **31.80**<br>1.252 | | **34.92**<br>1.375 | | **15.29**<br>0.602 | | **33.73**<br>1.328 | |
| 24 | **42.90**<br>1.689 | **34.90**<br>1.374 | **3.70**<br>0.146 | **38.10**<br>1.500 | | | **28.72**<br>1.131 | **36.91**<br>1.453 | **2.26**<br>0.089 |

**Millimeters** Inches

# 38999-Style HDJ Series Connectors

## Solder Mount-Shell Style 01H (JN 1003 Style E Type)*

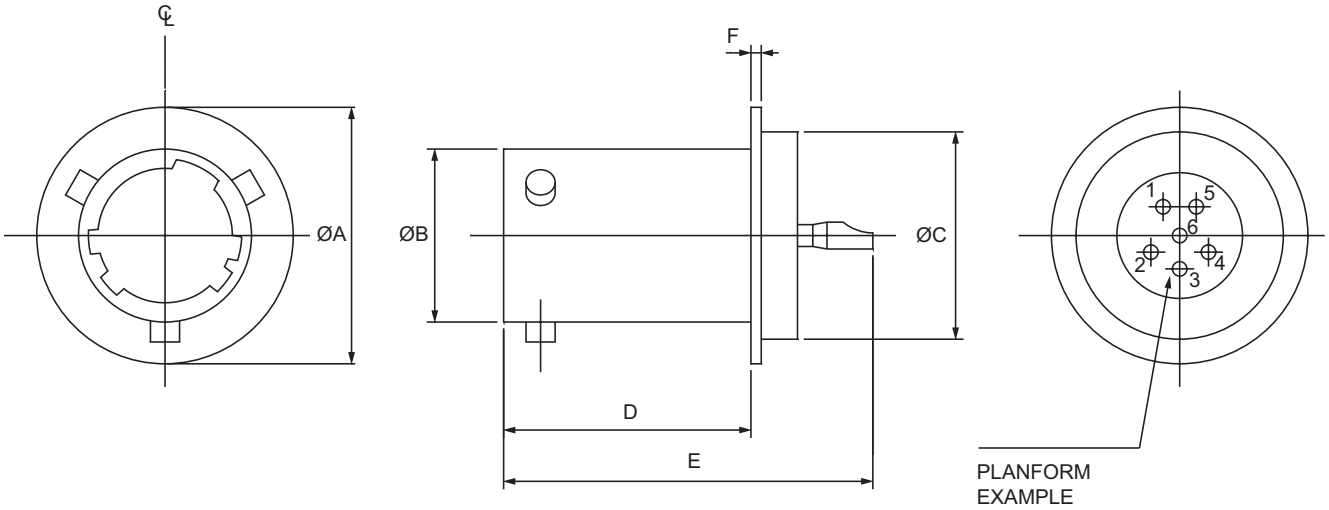


| Shell Size | ØA ±0.05 (±0.002) | B +0.00/-0.16 (+0.00/-0.006) | C ±0.05 (±0.002) | D Max. | E ±1.16 (±0.046) | F Max. |
|---|---|---|---|---|---|---|
| 08 | **17.45** 0.687 | **12.00** 0.472 | **14.20** 0.559 | | | |
| 10 | **20.24** 0.797 | **15.00** 0.591 | **16.99** 0.669 | | | |
| 12 | **23.01** 0.906 | **19.05** 0.750 | **19.76** 0.778 | | | |
| 14 | **26.19** 1.031 | **22.22** 0.875 | **22.94** 0.903 | **17.18** 0.676 | **26.29** 1.035 | |
| 16 | **29.36** 1.156 | **25.40** 1.000 | **26.11** 1.028 | | | **0.76** 0.030 |
| 18 | **32.54** 1.281 | **28.57** 1.125 | **29.29** 1.153 | | | |
| 20 | **34.92** 1.375 | **31.75** 1.250 | **31.67** 1.247 | | | |
| 22 | **38.10** 1.500 | **34.92** 1.375 | **34.85** 1.372 | **17.19** 0.677 | **26.30** 1.035 | |
| 24 | **41.27** 1.625 | **38.10** 1.500 | **38.02** 1.497 | | | |

**Millimeters** Inches
*Shell Styles '01H' and '03' are not qualified to JN1003

# 38999-Style HDJ Series Connectors

## Through Bulkhead Receptacle Shell Style 03 (JN 1003 Style J Type)*

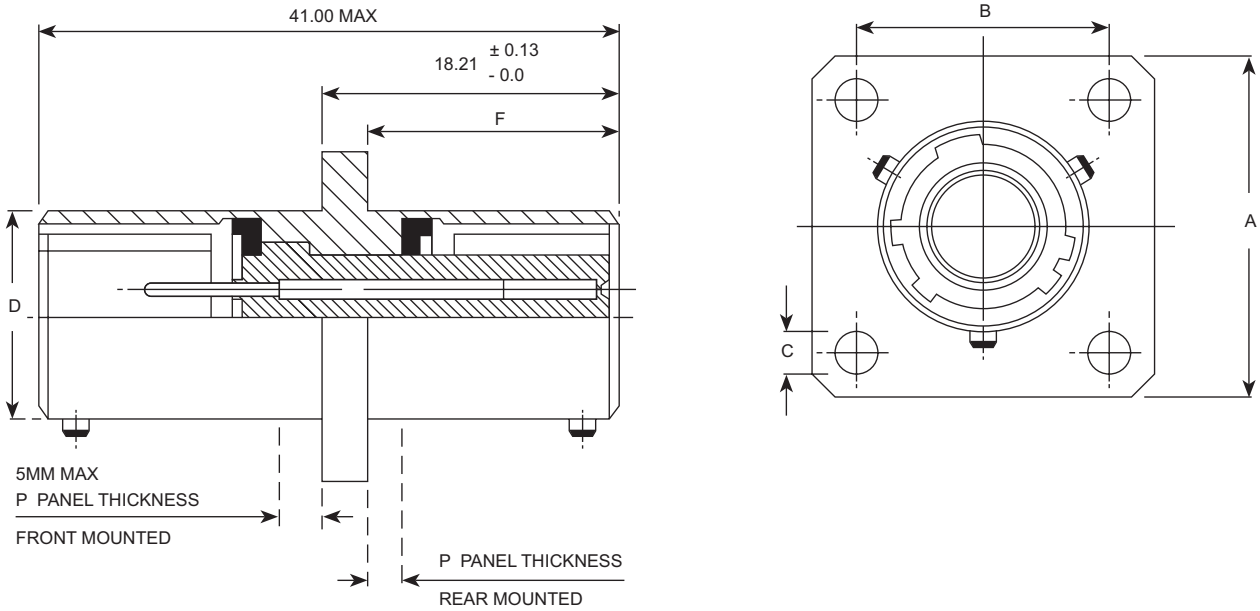


| Shell Size | A +0.40 (±0.016) | B ±0.13 (±0.005) | C ±0.10 (±0.004) | D +0/-0.13 (+0/-0.005) | F +0/-0.13 (+0/-0.005) | P Max. |
|---|---|---|---|---|---|---|
| 08 | **20.62** 0.812 | **15.10** 0.594 | | **12.00** 0.472 | | |
| 10 | **23.83** 0.938 | **18.30** 0.720 | | **15.00** 0.591 | | |
| 12 | **26.19** 1.031 | **20.60** 0.811 | | **19.05** 0.750 | **16.05** 0.632 | |
| 14 | **28.57** 1.125 | **23.00** 0.906 | **3.20** 0.126 | **22.22** 0.875 | | **3.00** 0.118 |
| 16 | **30.96** 1.219 | **24.60** 0.969 | | **25.40** 1.000 | | |
| 18 | **33.32** 1.312 | **27.00** 1.063 | | **28.57** 1.125 | | |
| 20 | **36.53** 1.438 | **29.40** 1.157 | | **31.75** 1.250 | | |
| 22 | **39.67** 1.562 | **31.80** 1.252 | | **34.92** 1.375 | **15.29** 0.602 | |
| 24 | **42.90** 1.689 | **34.90** 1.374 | **3.70** 0.146 | **38.10** 1.500 | | **2.26** 0.089 |

**Millimeters** Inches

# 38999-Style HDJ Series Connectors

## Plugs
## Plug with Grounding Fingers - Shell Style 06 (JN 1003 Style FG)

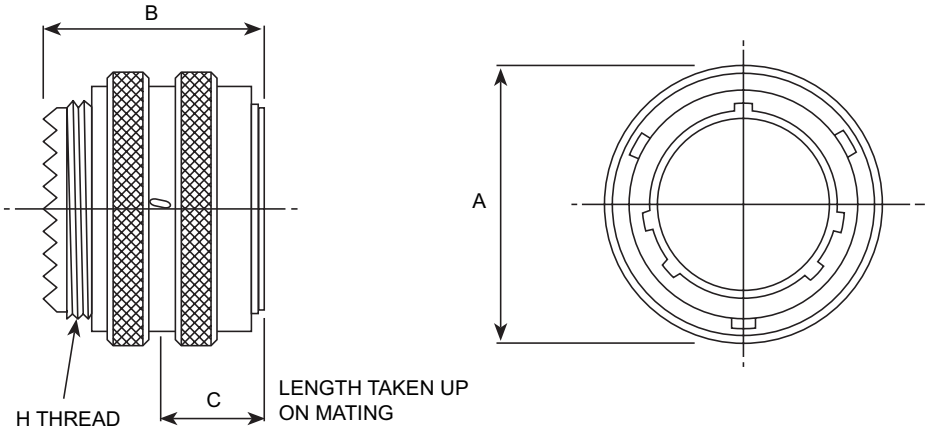


| Shell Size | A Max. | B Max. | C Max. | H Thread UNEF Class 2a |
|---|---|---|---|---|
| **08** | **18.64**<br>0.734 | | | 0.4375 – 28 |
| **10** | **21.44**<br>0.844 | | | 0.5625 – 24 |
| **12** | **25.81**<br>1.016 | | | 0.6875 – 24 |
| **14** | **28.98**<br>1.141 | **30.00**<br>1.181 | | 0.8125 – 20 |
| **16** | **32.13**<br>1.265 | | **15.00**<br>0.591 | 0.9375 – 20 |
| **18** | **35.33**<br>1.391 | | | 1.0625 – 18 |
| **20** | **38.10**<br>1.500 | | | 1.1875 – 18 |
| **22** | **41.27**<br>1.625 | | | 1.3125 – 18 |
| **24** | **44.45**<br>1.750 | **31.50**<br>1.240 | | 1.4375 – 18 |

**Millimeters** Inches

# 38999-Style HDJ Series Connectors

## Accessories
## Protective Cap, Receptacle (JN 1003 Styles MA/MB)*

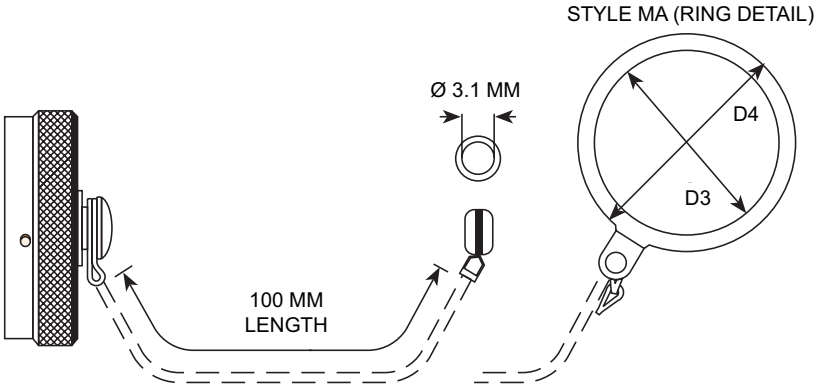


| TE DEUTSCH Part No. | Eurofighter Ref. | Shell Size |
|---|---|---|
| HDJ12 – ** | JN1003MB** | ** |
| HDJ13 – ** | JN1003MA** | ** |

| Shell Size | D3 | D4 |
|---|---|---|
| 08 | **14.6**<br>0.575 | **21.95**<br>0.864 |
| 10 | **17.8**<br>0.701 | **26.77**<br>1.054 |
| 12 | **22.5**<br>0.886 | **31.55**<br>1.242 |
| 14 | **25.7**<br>1.012 | **36.83**<br>1.450 |
| 16 | **28.9**<br>1.138 | **40.31**<br>1.587 |
| 18 | **32.1**<br>1.264 | **43.18**<br>1.700 |
| 20 | **35.2**<br>1.386 | **46.36**<br>1.825 |
| 22 | **38.0**<br>1.496 | **49.19**<br>1.937 |
| 24 | **41.6**<br>1.638 | **52.71**<br>2.075 |

**Millimeters** Inches
*Protective caps are not qualified to JN1003

# 38999-Style HDJ Series Connectors

## Accessories
## Protective Cap, Plug (JN 1003 Style MF)

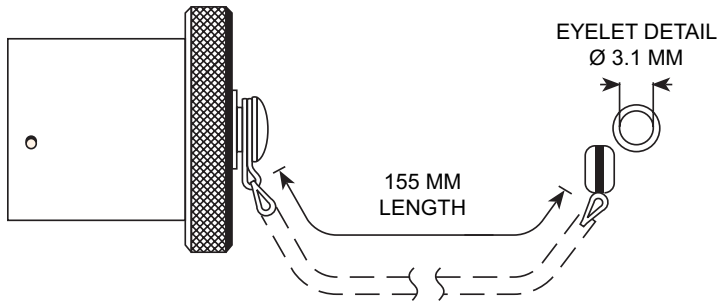


| TE DEUTSCH Part No. | Eurofighter Ref. | Shell Size |
|---|---|---|
| HDJ11 – ** | JN1003MF** | ** |

# 38999-Style HDJ Series Connectors

## Accessories
## Dummy Stowage (JN 1003 Style R)

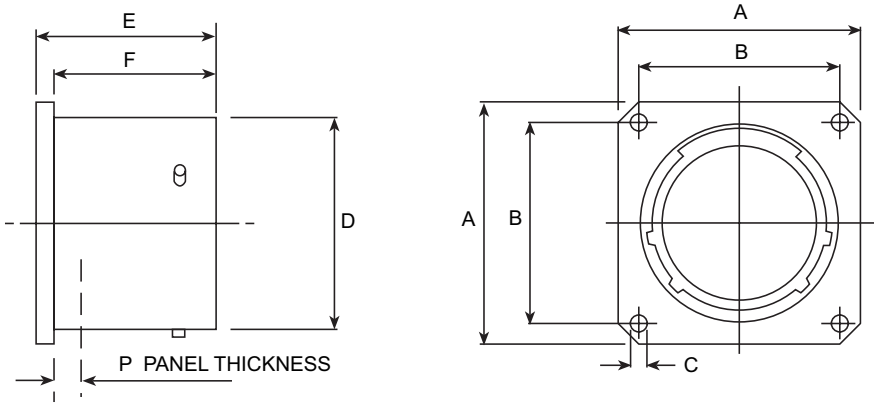


| TE DEUTSCH Part No. | Eurofighter Ref. | Shell Size |
|---|---|---|
| HDJ10 – ** | JN1003R** | ** |

| Shell Size | A +0.40 (+0.016) | B ±0.13 (±0.005) | C ±0.10 (±0.004) | D +0/-0.13 (+0/-0.005) | E +0.15 (+0.006) | F +0/-0.13 (+0/-0.005) | P Max. |
|---|---|---|---|---|---|---|---|
| 08 | **20.62** 0.812 | **15.10** 0.594 | | **12.00** 0.472 | | | |
| 10 | **23.83** 0.938 | **18.30** 0.720 | | **15.00** 0.591 | | | |
| 12 | **26.19** 1.031 | **20.60** 0.811 | | **19.05** 0.750 | | **16.05** 0.632 | |
| 14 | **28.57** 1.125 | **23.00** 0.906 | **3.20** 0.126 | **22.22** 0.875 | | | **3.00** 0.118 |
| 16 | **30.96** 1.219 | **24.60** 0.969 | | **25.40** 1.000 | **18.21** 0.717 | | |
| 18 | **33.32** 1.312 | **27.00** 1.063 | | **28.57** 1.125 | | | |
| 20 | **36.53** 1.438 | **29.40** 1.157 | | **31.75** 1.250 | | | |
| 22 | **39.67** 1.562 | **31.80** 1.252 | | **34.92** 1.375 | | **15.292** 0.602 | |
| 24 | **42.90** 1.689 | **34.90** 1.374 | **3.70** 0.146 | **38.10** 1.500 | | | **2.266** 0.089 |

**Millimeters** Inches

## Insert Arrangements

### SIZE 8

**08-35**
6#22D (M)

**08-98**
3#20 (I)

### SIZE 10

**10-35**
13#22D (M)

**10-98**
6#20 (I)

### SIZE 12

**12-04**
4#16 (I)

**12-35**
22#22D (M)

**12-98**
10#20 (I)

### SIZE 14

**14-19**
19#20 (I)

**14-35**
37#22D (M)

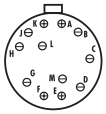

**14-97**
8#20 4#16 (I)

### SIZE 16

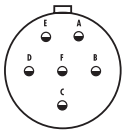

**16-06**
6#12 (I)

### SIZE 16

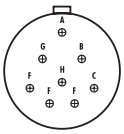

**16-08**
8#16 (II)

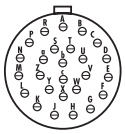

**16-26**
26#20 (I)

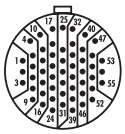

**16-35**
55#22D (M)

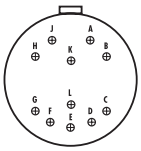

**18-11**
11#16 (II)

### SIZE 18

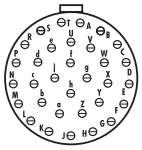

**18-32**
32#20 (I)

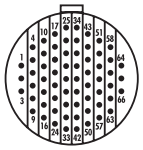

**18-35**
66#22D (M)

### SIZE 20

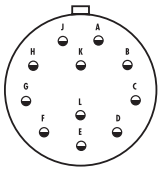

**20-11**
11#12 (I)

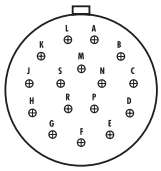

**20-16**
16#16 (II)

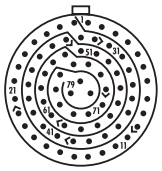

**20-35**
79#22D (M)

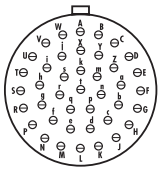

**20-41**
41#20 (I)

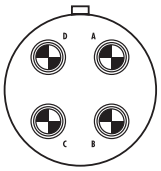

**20-75**
4 TWINAX #8 (M)

### SIZE 22

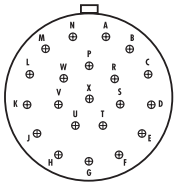

**22-21**
21#16 (II)

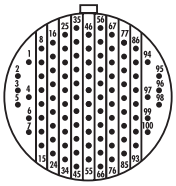

**22-35**
100#22D (M)

### SIZE 22

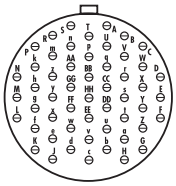

**22-53**
53#20 (I)

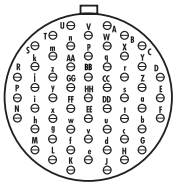

**22-55**
55#20 (I)

### SIZE 24

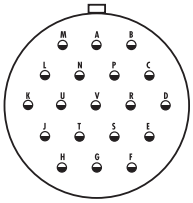

**24-19**
19#12 (I)

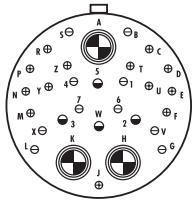

**24-20**
10#20 13#16 4#12
3 TWINAX #8 (N)

### SIZE 24

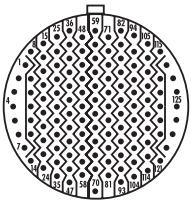

**24-35**
128#22D (M)

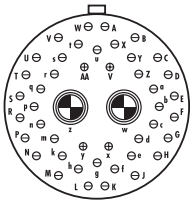

**24-46**
40#20 4#16 2#8 COAX (I)

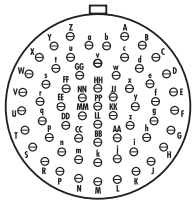

**24-61**
61#20 (I)

### APPLICATION FLEXIBILITY

- Available in various shell sizes: 9 (1Q1), 17 (2Q2), 19 (4Q4), 21 (4Q4) and 25 (8Q8)
- Accepts standard backshells

### RUGGED

- Designed for use with wire seal boots for sealing and optimized alignment
- Front metal-shell design provides a full ground plane

### SAVES WEIGHT

- Lightweight composite rear shell available in size 19

# Quadrax Connectors

## Custom 38999-Style Series III Connectors

TE Connectivity (TE) offers the highly versatile Quadrax multi-signal contact system consisting of two differential pairs (matched impedance) used with quadraxial Ethernet and Fiber Channel cables.*

# Specifications

### ELECTRICAL

- **Bandwidth:** Up to 3 GHz
- **Data Rate:** >2 Gb/s
- **Characteristic Impedance:** 100Ω (± 10Ω)
- **Maximum Voltage Rating:** 500 $V_{rms}$ @ sea level
- **Dielectric Withstanding Voltage:**
  1000 $VAC_{rms}$ between any two contacts @ sea level
  500 $VAC_{rms}$ between any contact and outer shell @ sea level

### MATERIALS

- **Contacts, Shells, Ferrules:**
  Copper alloy with gold over nickel finish
  One-piece thermoplastic dielectric

### MECHANICAL/ENVIRONMENTAL

- **Maximum Mating Force:** 2.75 lbf.
- **Minimum Unmating Force:** 1.25 lbf.
- **Durability:** 500 mating cycles

### APPLICATIONS

- Commercial Avionics Systems
- Aircraft Data Networks
- Military Communications
- In-Flight Entertainment
- Space

### STANDARDS AND TEST REPORTS

- **TE Product Specification:** 108-2199
- **TE Test Reports:** 501-660
- **Application Specifications:** 114-13163

*Metal ground plane only

The connectors in this section are unique for metal ground plane Quadrax applications and are only inter-mateable with connectors of the opposite gender in this catalog section.

## Custom 38999-Style Series III Quadrax Connectors

| Shell Size | Part No. | Type | Description |
|---|---|---|---|
| 9 | 1738916 | Receptacle | 1Q1, FR-FR, Jam Nut Style, with PC Tail Contacts |
| | 1811184 | Receptacle | 1Q1, FR-FR, PCB Mount with Stand-offs and PC Tail Contacts |
| | 2157694 | Receptacle | 1Q1, RR-RR, Jam Nut Style |
| | 1877384 | Plug | 1Q1, RR-RR |
| 17 | 1877774 | Receptacle | 2Q2, RR-RR |
| | 2157455 | Receptacle | 2Q2, FR-FR, PCB Mount |
| | 2157695 | Receptacle | 2Q2, RR-RR, Jam Nut Style |
| | 1877775 | Plug | 2Q2, RR-RR |
| 19 | 1738974 | Receptacle | 4Q4, FR-FR, without PC Tail Contacts |
| | 1877732 | Receptacle | 4Q4, FR-FR, with PC Tail Contacts |
| | 1811901 | Receptacle | 4Q4, RR-RR |
| | 2157696 | Receptacle | 4Q4, RR-RR, Jam Nut Style |
| | 1811902 | Plug | 4Q4, RR-RR |
| | 2221849 | Receptacle | 4Q4, with Threaded Mounting Holes |
| 21 | 1954355 | Plug | 4Q4, RR-RR |
| | 1954353 | Receptacle | 4Q4, FR-FR, with PC Tail Contacts |
| | 2101633 | Receptacle | 4Q4, RR-RR, Flange Mount |
| 23 | 1877921 | Plug | 6Q6, RR-RR |
| | 1954577 | Receptacle | 6Q6, RR-RR |
| | 2221366 | Receptacle | 6Q6, FR-FR, with PC Tail Contacts |
| 25 | 1811928 | Plug | 8Q8, RR-RR |
| | 1811927 | Receptacle | 8Q8, RR-RR |
| | 2157628 | Receptacle | 8Q8, RR-RR, Jam Nut Style |
| | 2101395 | Receptacle | 8Q8, FR-FR, with PC Tail Contacts |
| | 1996625 | Receptacle | 8Q8, FR-FR, PCB Mount with Stand-offs and PC Tail Contacts |

See TE Customer Drawing for finish options

## Custom 38999-Style Series III Quadrax Connectors

**Plug, Shell Size 9 Single Quadrax, RR-RR**
**Part No. 1877384**

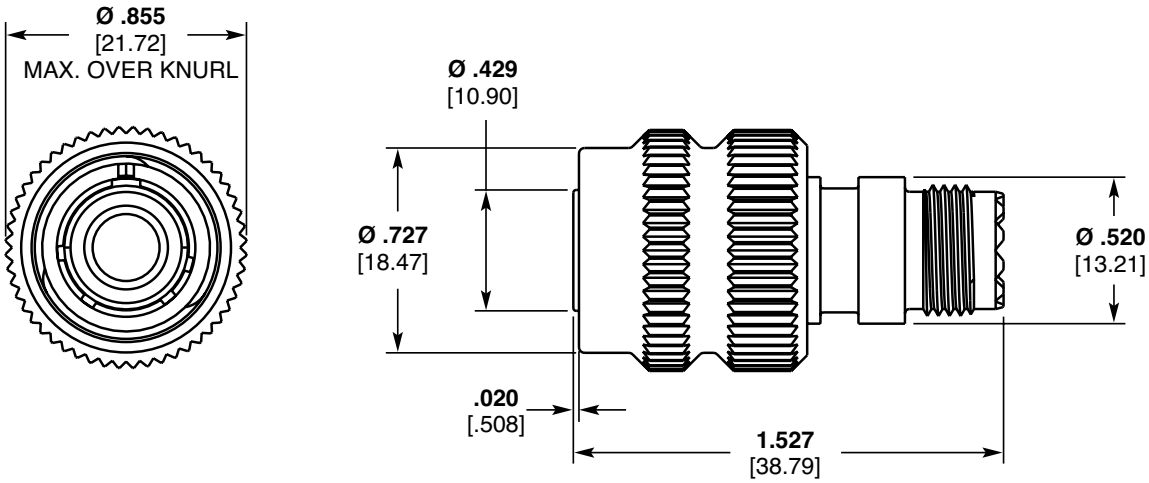

# Custom 38999-Style Series III Quadrax Connectors

**Receptacle, Shell Size 9, 38999 Style Single Quadrax, FR-FR Jam Nut Style**
**Part No. 1738916**

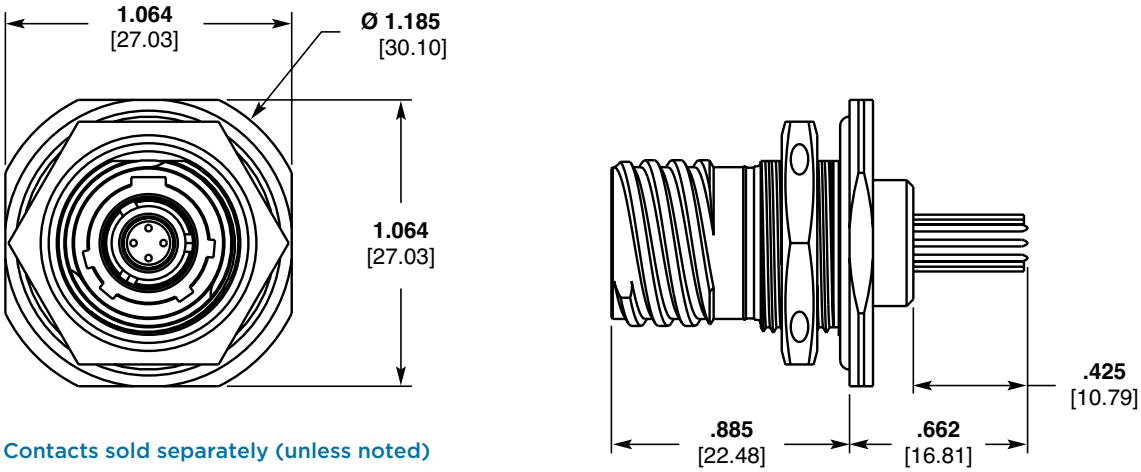


Contacts sold separately (unless noted)

**Receptacle, Shell Size 9, Single Quadrax, FR-FRPCB Mount with Stand-offs**
**Part No. 1811184 (with PC tail contacts)**

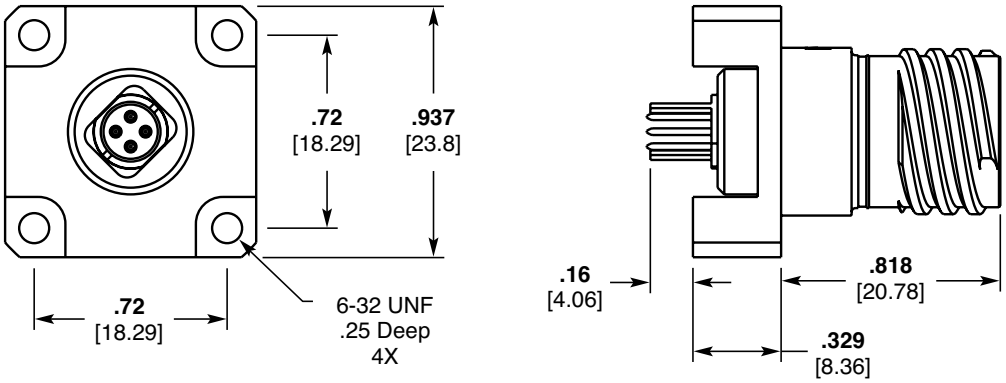


**Receptacle, Shell Size 9, Single Quadrax, RR-RR Jam Nut Style**
**Part No. 2157694**

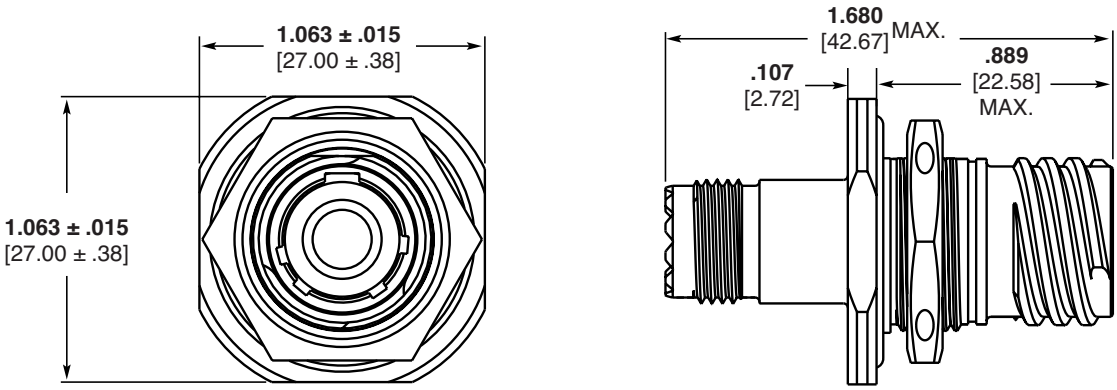

# Custom 38999-Style Series III Quadrax Connectors

**Plug, Shell Size 17, Arrangement 2Q2, RR-RR**
**Part No. 1877775**

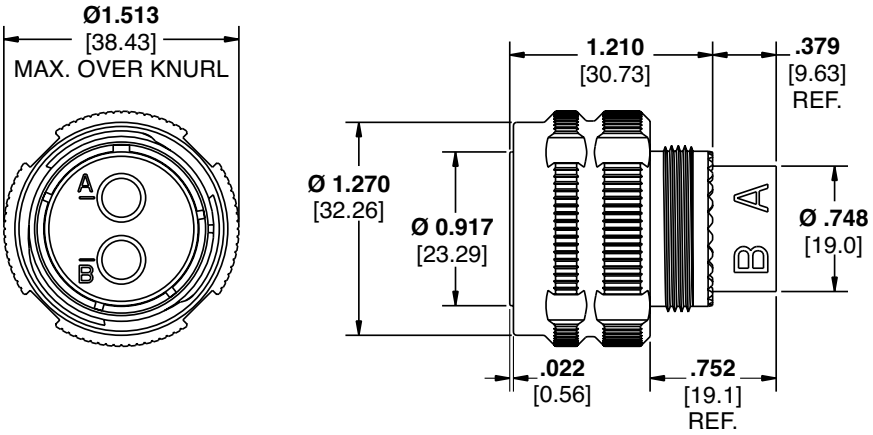


**Receptacle, Shell Size 17, Arrangement 2Q2, RR-RR**
**Part No. 1877774**

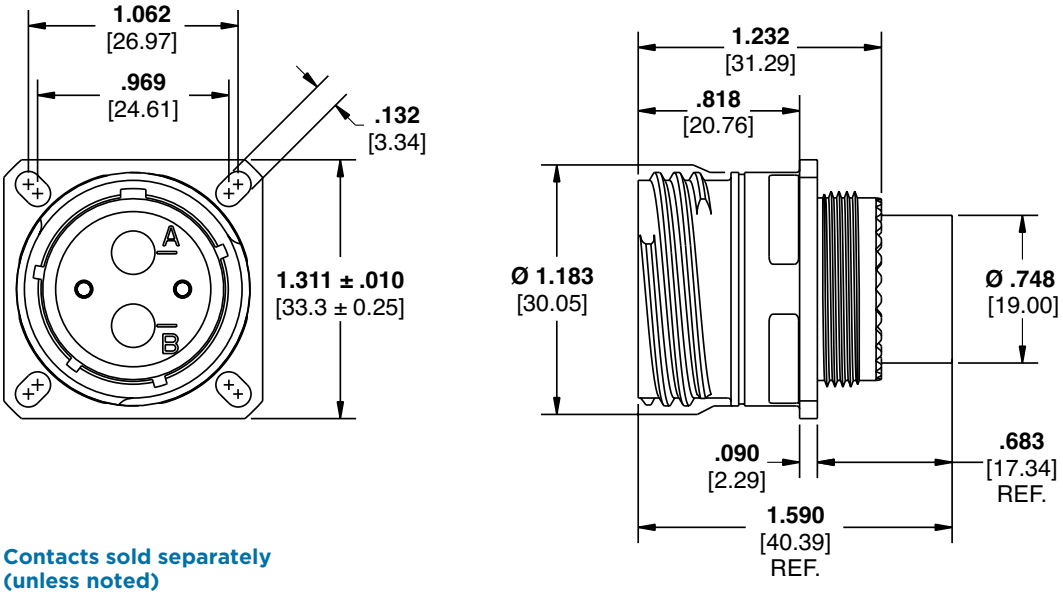


**Contacts sold separately**
**(unless noted)**

# Custom 38999-Style Series III Quadrax Connectors

**Receptacle, Shell Size 17, Arrangement 2Q2, FR-FR**
**Part No. 2157455**

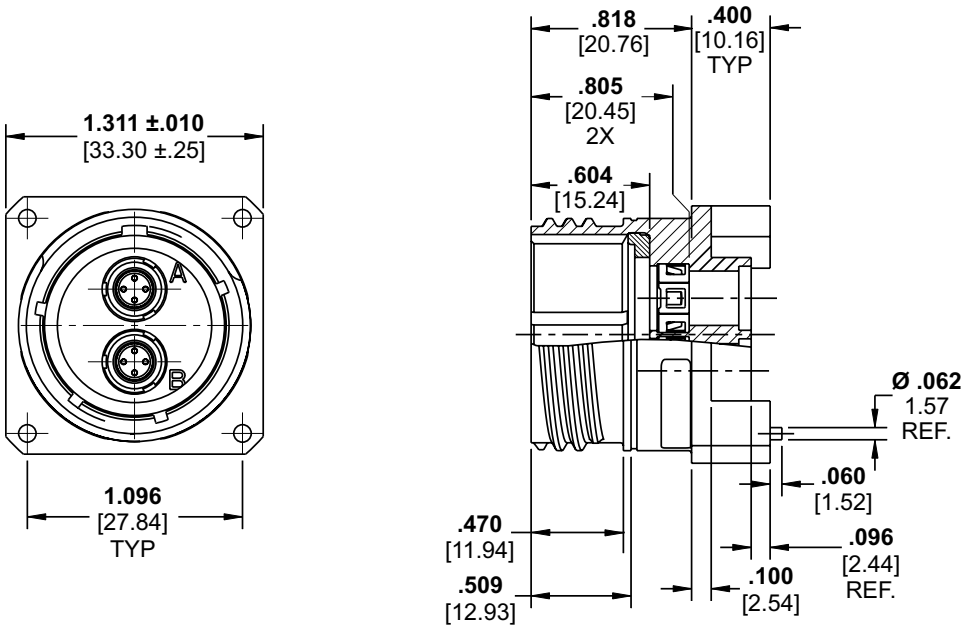


**Receptacle, Shell Size 17, Arrangement 2Q2, RR-RRJam Nut Style**
**Part No. 2157695**

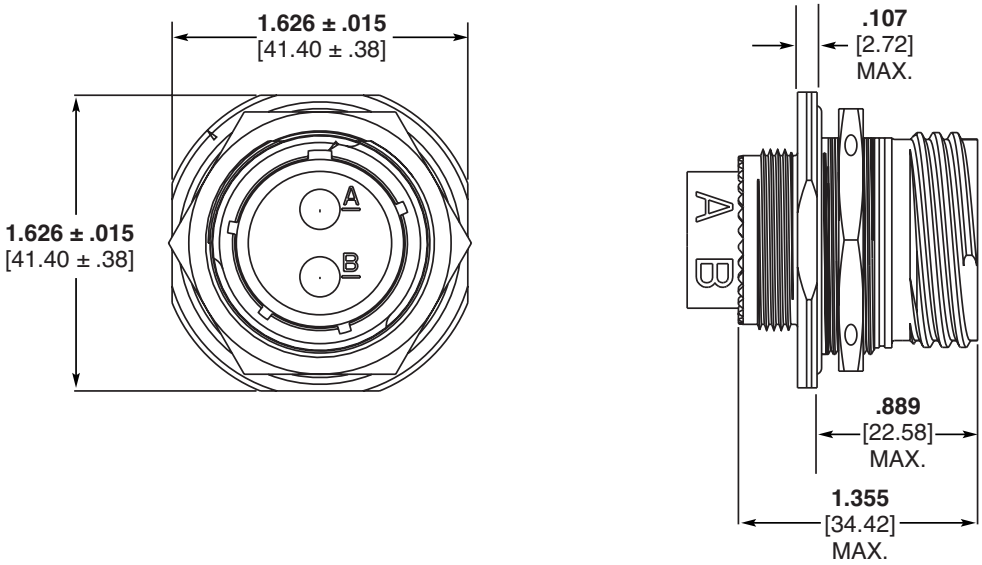

# Custom 38999-Style Series III Quadrax Connectors

**Plug, Shell Size 19, Arrangement 4Q4, RR-RR**
**Part No. 1811902**

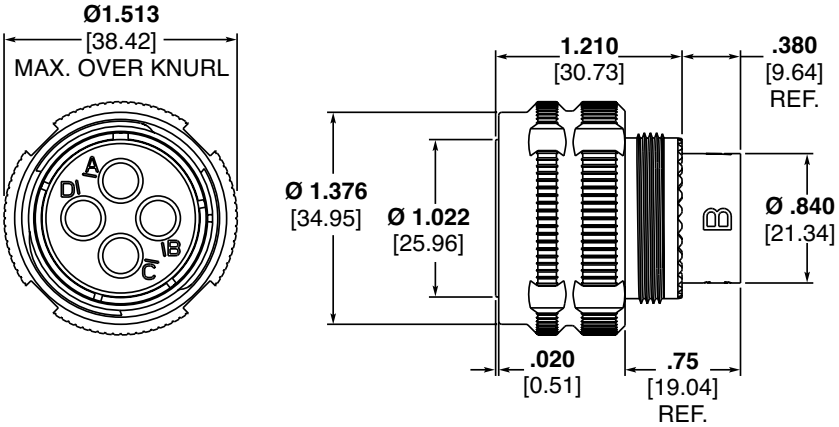


**Receptacle, Shell Size 19, Arrangement 4Q4, RR-RR**

**Part No. 1877732**
**(w/ PC Tail Contacts)**

**Part No. 1738974**
**(connector only)**

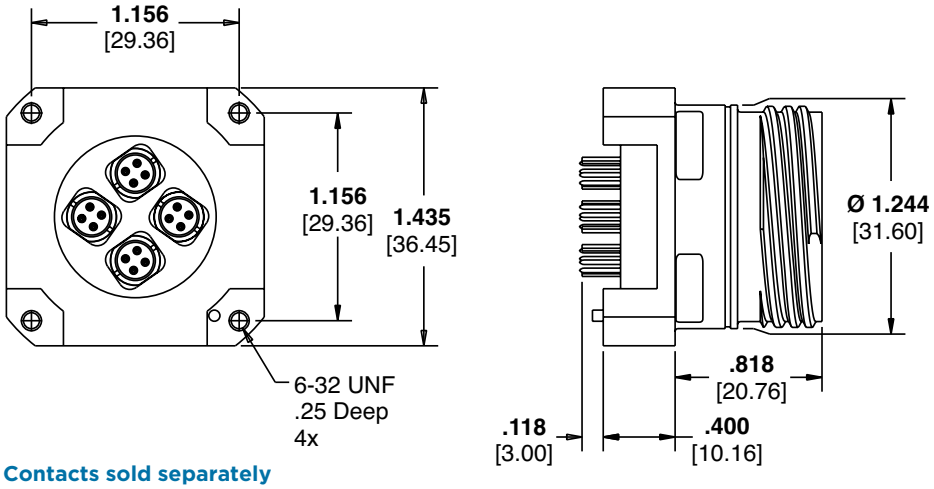


**Contacts sold separately**
**(unless noted)**

# Custom 38999-Style Series III Quadrax Connectors

**Receptacle, Shell Size 19, Arrangement 4Q4, RR-RR**
**Part No. 1811901**

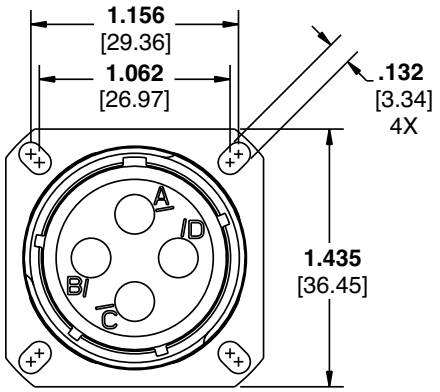


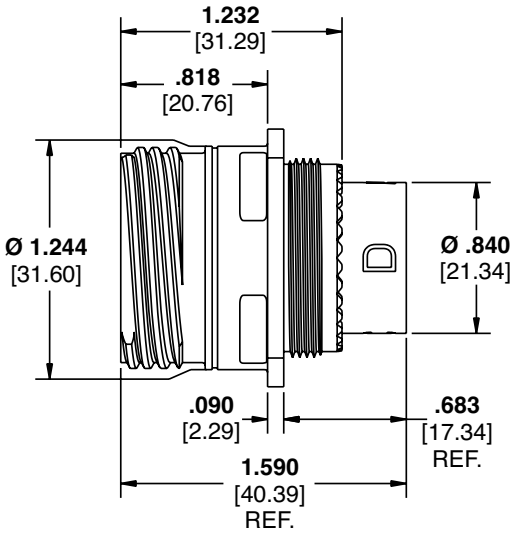


**Receptacle, Shell Size 19, Arrangement 4Q4, RR-RR Jam Nut Style**
**Part No. 2157696**

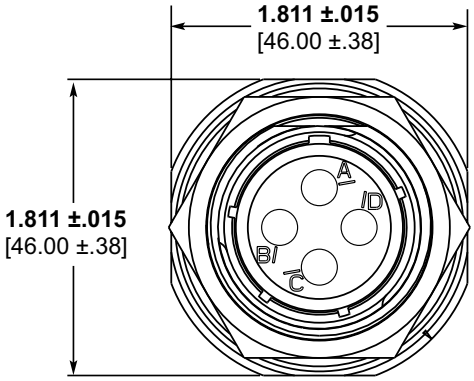


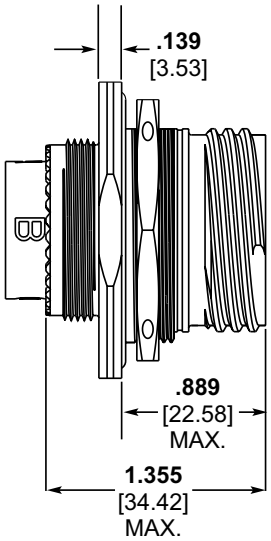

# Custom 38999-Style Series III Quadrax Connectors

**Receptacle, Shell Size 19 Arrangement 4Q4, With Threaded Mounting Holes**
**Part No. 2221849**

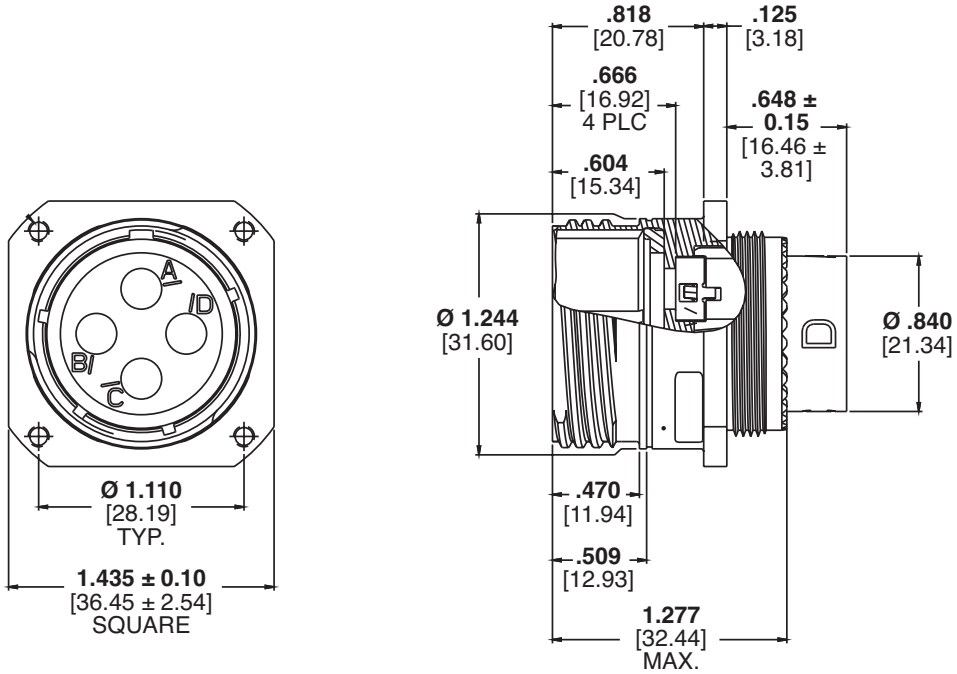


**Plug, Shell Size 21, Arrangement 4Q4, FR-FR**
**Part No. 1954354**

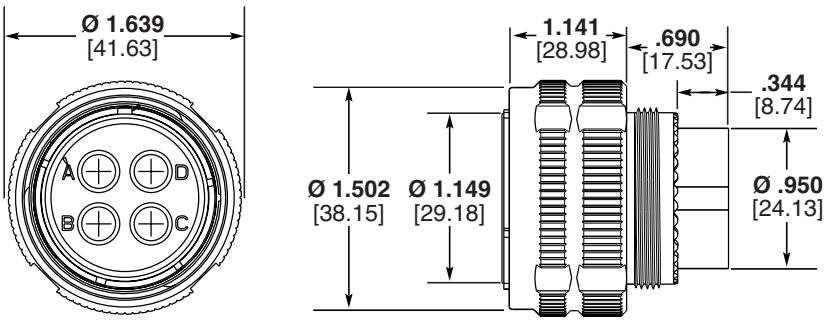

# Custom 38999-Style Series III Quadrax Connectors

**Receptacle, Shell Size 21, Arrangement 4Q4, FR-FR**
**Part No. 1954353**

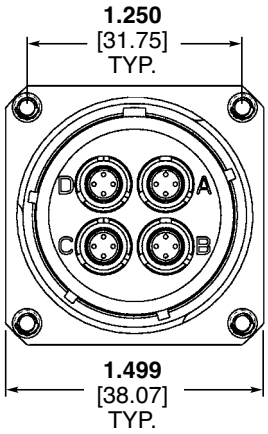


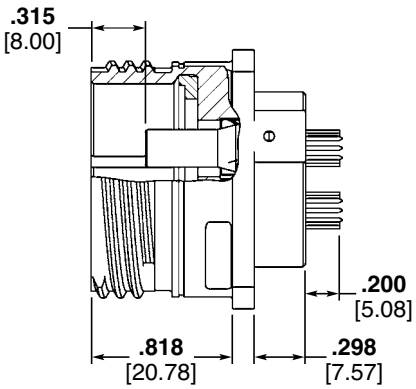


**Receptacle, Shell Size 21 38999 Style Arrangement 4Q4, RR-RR Flange Mount**
**Part No. 2101633**

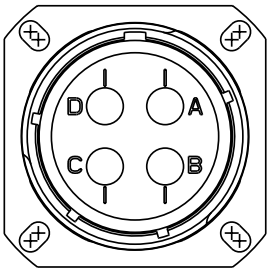


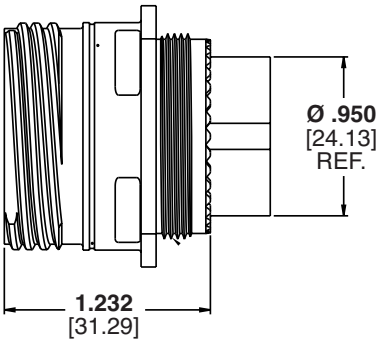


**Plug, Shell Size 23, Arrangement 6Q6**
**Part No. 1877921**

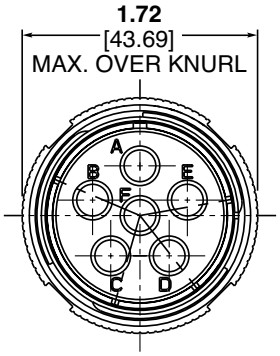


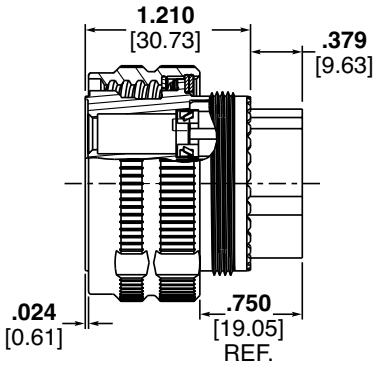


**Contacts sold separately (unless noted)**

# Custom 38999-Style Series III Quadrax Connectors

**Receptacle, Shell Size 23, Arrangement 6Q6,**
**Part No. 1954577**

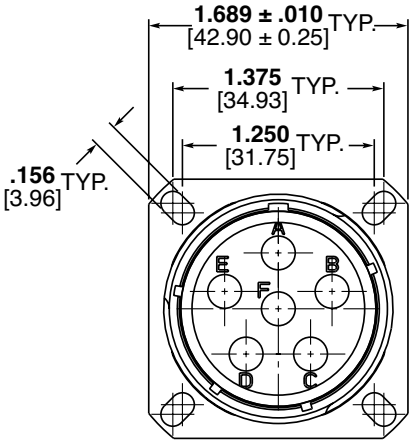


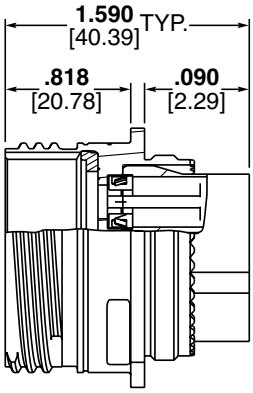


**Receptacle, Shell Size 23 38999 Style, Arrangement 6Q6, PCB Mount**
**Part No. 2221366**

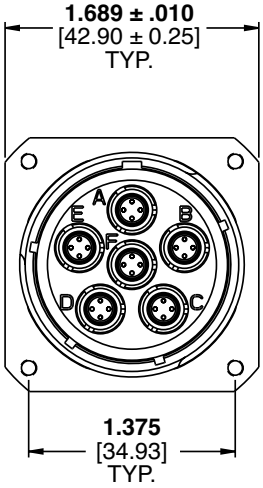


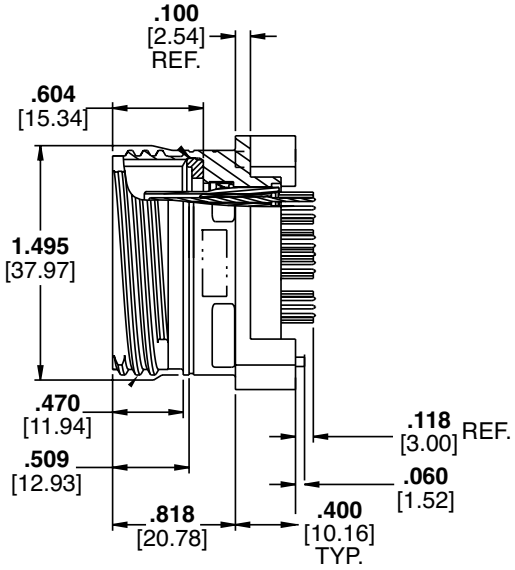

# Custom 38999-Style Series III Quadrax Connectors

**Plug, Shell Size 25, Arrangement 8Q8, RR-RR**
**Part No. 1811928**

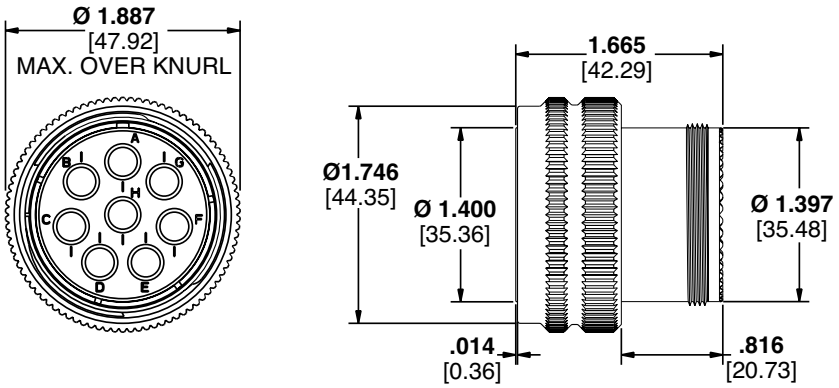


**Receptacle, Shell Size 25 Arrangement 8Q8, RR-RR**
**Part No. 1811927**

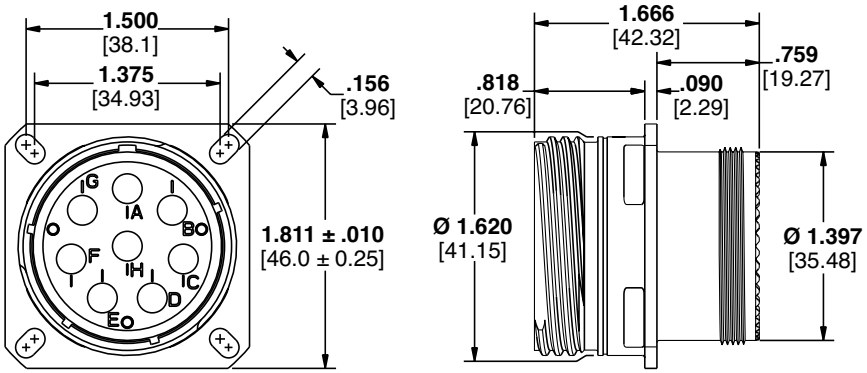


**Receptacle, Shell Size 25 Arrangement 8Q8, FR-FR**
**Part No. 2101395 (w/ PC Tail Contacts)**

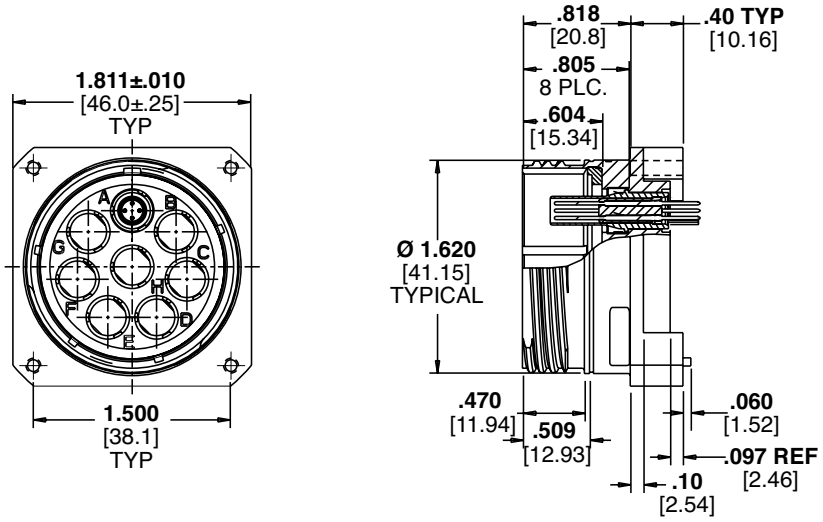

# Custom 38999-Style Series III Quadrax Connectors

**Receptacle, Shell Size 25 38999 Style, Arrangement 8Q8,RR-RR Jam Nut**
**Part No. 2157628**

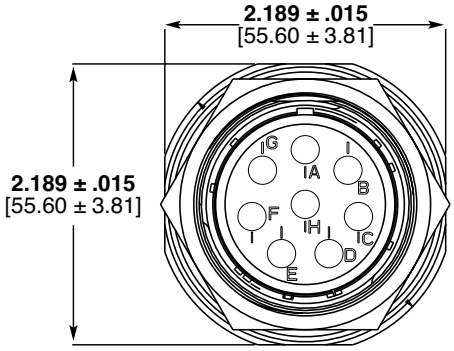


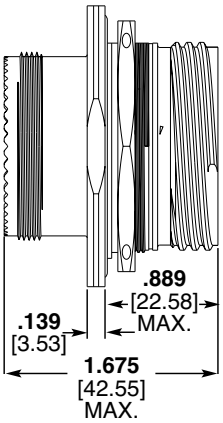


**Contacts sold separately (unless noted)**

**Receptacle, Shell Size 25, Arrangement 8Q8, FR-FR**
**Part No. 1996625**

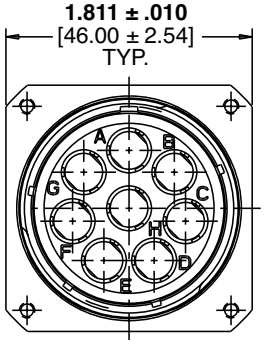


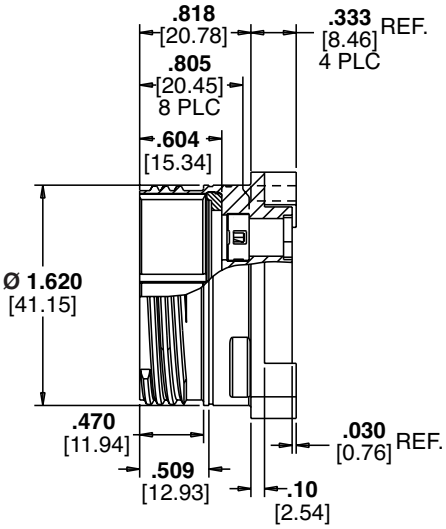

## FAST, EASY ASSEMBLY

- One-piece dielectric inserts for easy assembly and to help lower applied cost
- Crimp type, screw machined, 24 AWG contacts
- Quadrax size 8 shells are keyed per ARINC 600 for correct orientation
- Asymmetric standoff leg provides built-in keying for direct attach to PC board

## HIGH PERFORMANCE

- TE's Quadrax contacts support 100 Ω GbE and 150 Ω Fibre Channel
- Available silicone seal boots are rated for 50,000 ft. altitude immersion

## VERSATILE

- Compatible with a wide range of rectangular and circular connectors
- Cable-applied crimp contacts and PC tail contacts for board-mount soldering

# Quadrax Contacts

## PC Tail Contacts, Pin

| Part No. | Dim A | Notes |
|---|---|---|
| 1445626-1 | **5.79** .228 | |
| 1445626-2 | **10.72** .422 | |
| 1445626-3 | **4.60** .181 | |
| 1445626-4 | **7.54** .297 | |
| 1445626-5 | **7.54** .297 | Solder Dipped Tails |

**Millimeters** Inches

## Crimp Contact Kits

| Part No. | | Hex Crimp | Wire Seal Boot |
|---|---|---|---|
| Pin | Socket | | |
| 1445692-1 | 1445693-1 | **5.54** .218 | No |
| 1445692-3 | 1445693-3 | **5.54** .218 | Yes |
| 1445692-4* | 1445693-4* | — | Yes |
| Reference cables: NF24Q100, NF26Q100, 24443/03130X-4(LD), 24443/9P025X-4(LD); Raychem CEC-RWC-18687, Raychem CEC-RWC-18664 | | | |
| 1445692-5 | 1445693-5 | **5.54** .218 | Yes |
| 1445692-6 | 1445693-6 | **5.54** .218 | No |
| Reference cables: F4703-3, F4704-4 (Insulation Diameter Is Larger) | | | |
| 1877039-1 | 1877040-1 | **5.87** .231 | No |
| 1877039-2 | 1877040-2 | **5.87** .231 | Yes |
| Reference cables: 26473/02006X-4(LD); Raychem CEC-RWC-18684, Raychem CEC-RWC-18680 | | | |

**Millimeters** Inches

* Qualified to Boeing BACC47GA1 (Pin) and BACC47GB1 (Socket)

## Crimp Contacts with Heat-Shrink Tubing

| Part No. | | Hex Crimp |
|---|---|---|
| Pin | Socket | |
| 1811269-1 | 1811010-1 | **5.54** .218 |

**Millimeters** Inches

## Direct Attach PCB Contacts

| Part No. | Impedance | Tail Length | Dim A |
|---|---|---|---|
| 1954576-1 | 150 Ohms | **3.18** .125 | **6.86** .270 |
| 1954576-2 | 100 Ohms | **3.18** .125 | **6.86** .270 |
| 1954576-3 | 100 Ohms | **5.21** .205 | **6.86** .270 |

**Millimeters** Inches

## Differential Twinax Contacts

| Part No. | | Hex Crimp |
|---|---|---|
| Pin | Socket | |
| 1811865-1 | 1811866-1 | **5.54** .218 |

**Millimeters** Inches

# Quadrax Contacts

## PC Tail Contacts

| Part No. | Type | Dim A | Notes |
|---|---|---|---|
| 187-0095-01 | Pin | **7.00** .276 | ARINC 600, FAST |
| 187-0095-06 | | **8.10** .319 | |
| 187-0095-21 | | **7.00** .276 | |
| 187-0095-26 | | **8.10** .319 | |
| 187-0178-08 | Pin | **11.40** .449 | FDBA 50, FAST |
| 187-0121-01 | Pin | **6.35** .250 | ARINC 600, FAST, FDBA |
| 187-0121-08 | | **7.45** .293 | |
| 187-0121-21 | | **6.35** .250 | |
| 187-0121-26 | | **7.45** .293 | |
| 187-0136-08 | Socket | **7.30** .287 | ARINC 600, FAST, FDBA |
| 187-0206-08 | Pin | **12.50** .492 | MIL-DTL-38999 Series I, II, and III |
| 187-0281-08 | Pin | **6.80** .268 | 983 Series (Arrangement 20-04) |

**Millimeters** Inches

## Crimp Contacts

| Part No. | Type | Standard | Notes |
|---|---|---|---|
| 187-0205-08A* | Socket | EN3155-075F | DMC-M |
| 187-0204-08A* | Pin | EN3155-074M | DMC-M |
| 187-0109-08 | Socket | ABS 0974 | ARINC 600, FAST, FDBA, 983 Series |
| 187-0108-08 | Pin | ABS 0973 | ARINC 600, FAST, FDBA, 983 Series |
| 187-0110-08 | Pin | GSC-01-31869-00** | — |
| 187-0191-08 | Socket | HDDS 105 Specific | ARINC 600, FAST |

*"A" suffix indicates sealing sleeve
** Gore cable specific

## Quadrax Contacts (continued)

**Size 8 Quadrax**
**PCB Pin Contact**
**Front Release/**
**Front Remove Design**
**Part No. 1445626-1****
** various tail lengths

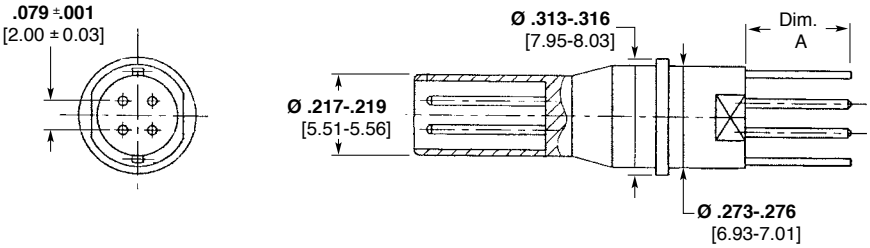


**Blank**
**Front Release/**
**Front Remove Design**
**Part No. 1604940-2**

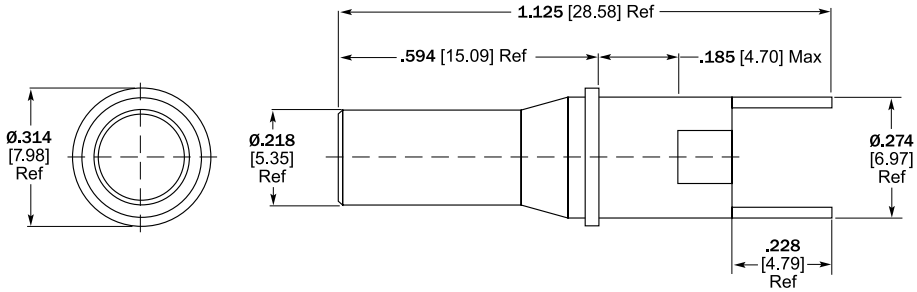


**Size 8 Quadrax**
**Pin Contact —**
**Crimp Style**
**Rear Release/**
**Rear Remove Design**
**Part No. 1445692-1***
* -3 with boot

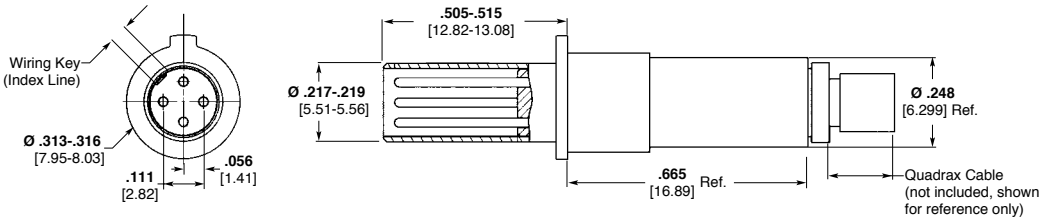


**Size 8 Quadrax**
**Socket Contact —**
**Crimp Style**
**Rear Release/**
**Rear Remove Design**
**Part No. 1445693-1***
* -3 with boot

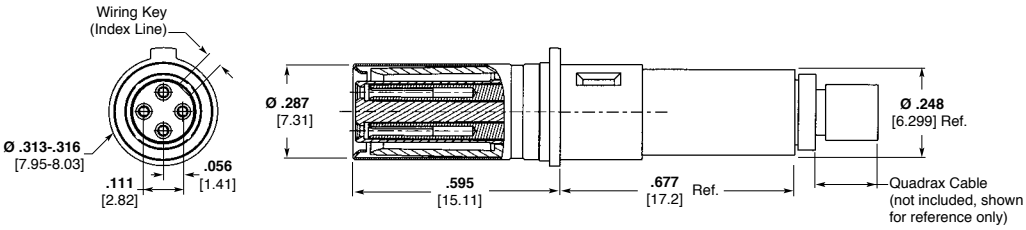

## Quadrax Contacts (continued)

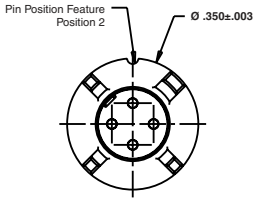


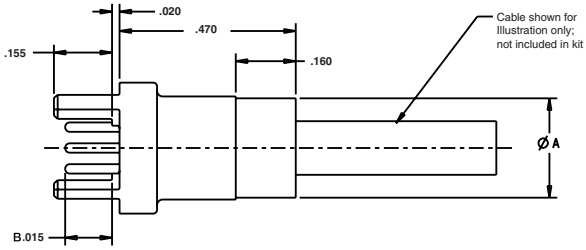


**PC Tail Contact – Direct Attach to PCB**

- 100 and 150 ohm Systems
- Simple Direct Attach to PCB without connector for component reduction
- Designed from ARINC size 8 Quadrax contacts
- Low cost solution from both assembly and component ends

**Part Number 1954576-1, -2: B = .125**
**Part Number 1954576-3: B = .205**

| Part No. | Impedance (Ω) | Dim A (Max) | Dim B |
|---|---|---|---|
| 1954576-1 | 150 | **6.86** [.270] | **3.18** [.125] |
| 1954576-2 | 100 | **6.35** [.250] | **3.18** [.125] |
| 1954576-3 | 100 | **6.35** [.250] | **5.21** [.205] |

**Millimeters** [Inches]

## Size 8 Differential Twinax Contacts

**100 Ohm Differential Pair Twinax Contact**

- Designed to help meet the requirements of ARINC Specification 810 for 100 ohm size 8 non-concentric twin-axial contacts
- Works in all connectors accepting ARINC 600 style Quadrax contacts

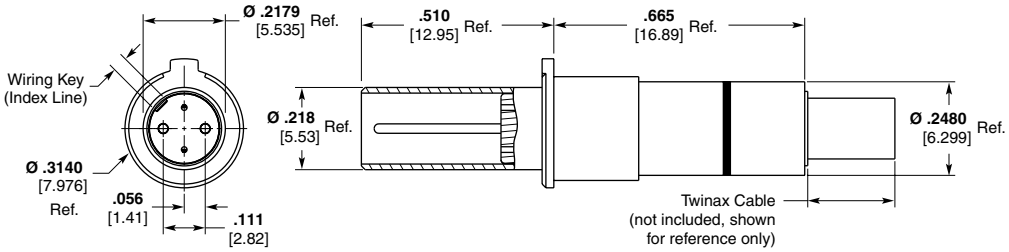


Part No. 1811865-1

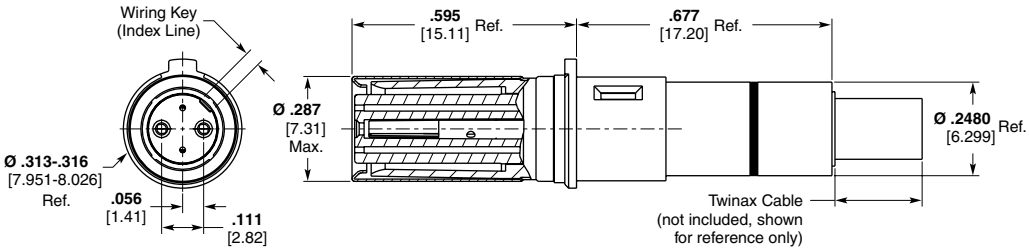


Part No. 1811866-1

# Quadrax/Twinax Contact Accessories

### Size 8 Quadrax Extraction Tool
### Part No. 1738894-1

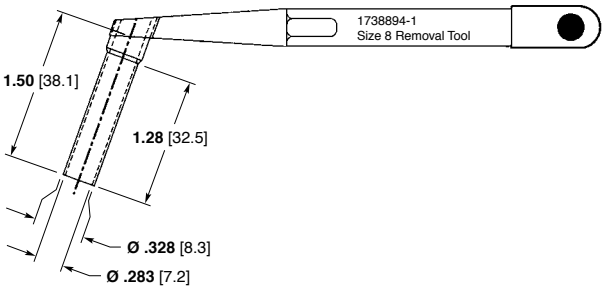


### Seal Boots

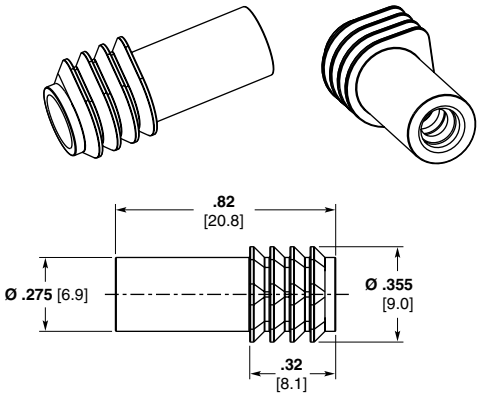


**Wire Seal Boot**
**Part No. 1811481-1**
**Cable O.D. .145–.175**
**.218 Hex Crimp**

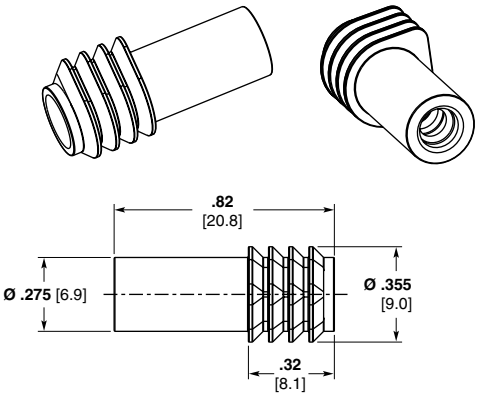


**Wire Seal Boot**
**Part No. 1811943-1**
**Cable O.D. .170–.200**
**.231 Hex Crimp**

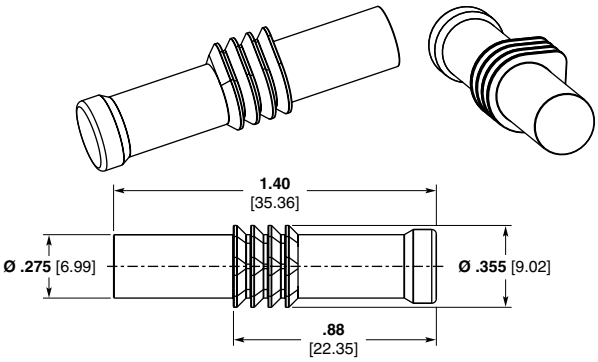


**Solid Seal Boot**
**Part No. 1811633-1**

### RUGGED

- MIL-DTL-32546 style
- Zero bit error rate
- Proven AS39029 crimp contacts
- Uses 38999-style shell

### FAST AND QUIET

- 1 G or 10 GbE data delivery
- Excellent impedance matching and minimal crosstalk
- Size 25 shell supports up to four Ethernet channels

### HIGH PERFORMANCE

- Designed for use in rugged environments
- Ideal choice for 10G Ethernet, IEEE 1394, USB 2.0 and other high-speed protocols
- Optimized shielding arrangement for superior signal integrity

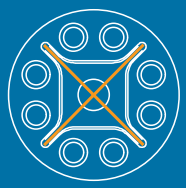

### CONVENIENT

- Fast field assembly, termination, and repair
- Available with aluminum or composite shells with a variety of finishes
- Install/repair using standard insertion/removal and crimping tools
- Range of inserts available for Size 25 shell for other connectivity needs

# CeeLok FAS-X Connectors

## The High-Performance, Rugged Solution for High-Speed Networks

CeeLok FAS-X connectors with AS39029 contacts were designed for rugged environments and help to provide reliable, consistent high-speed performance.

RJ45 connectors in 38999 shells are much larger than the CeeLok FAS-X connector (shell size 19 versus shell size 11). Additionally, the insulation displacement crimp technology may be unsuitable for use in certain harsh environments for which the M39029 crimp contacts used in the CeeLok FAS-X connector were intentionally designed.

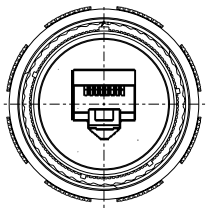

**RJ45**
**One Ethernet Channel**
Size 19 Shell
**38.35 mm** [1.51"] Dia.

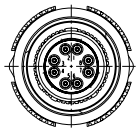

**CeeLok FAS-X Connector**
**One Ethernet Channel**
Size 11 Shell
**24.89 mm** [0.98"] Dia.

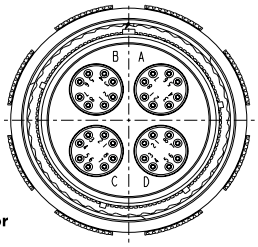


**CeeLok FAS-X Connector**
**Four Ethernet Channels**
(Equivalent to four RJ45s)
Size 25 Shell
**47.75 mm** [1.88"] Dia.

# CeeLok FAS-X Connectors

## Performance Characteristics

### APPLICATIONS

- Military and Aerospace High-Speed Networking
- Gigabit Ethernet and 10G Ethernet Networks
- IEEE 1394b I/O
- Fibre Channel Networks
- Modular 38999

### MECHANICAL/ENVIRONMENTAL

- **Temperature Rating:** -65°C to +200°C
- **Mating Cycles (Min.):** 500
- **Plug Diameter:** 0.984" and 1.889" (24.99 mm and 47.98 mm)
- **Sealing IP Rating:** IP67
- **Sealing Altitude Immersion:** 50,000'

### ELECTRICAL DATA

- **Dielectric Withstanding Voltage:** 1300 VAC
- **Contact Current Rating (Amps/Contact):** 5

### MATERIALS

- **Shells:** Aluminum or composite, nickel plated
- **Contact Finish:** Gold

### STANDARDS AND TEST REPORTS

- **TE Qualification Test Reports:** 10065 and 20101203

## Excellent Signal Integrity at Gigabit Rates

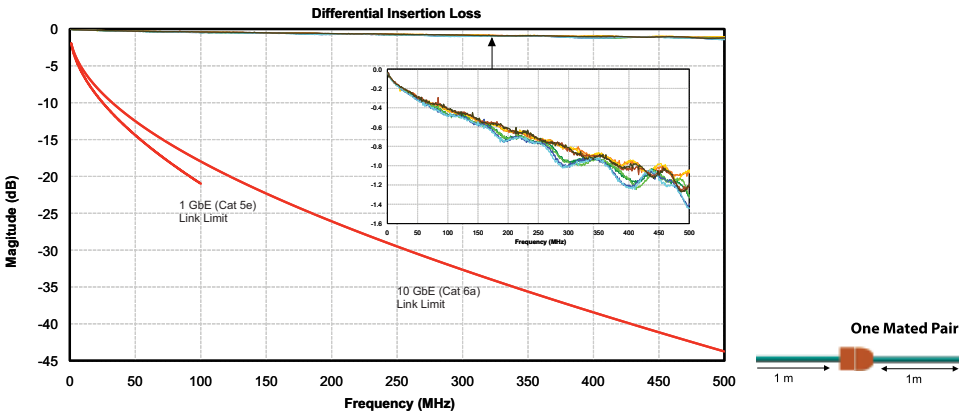





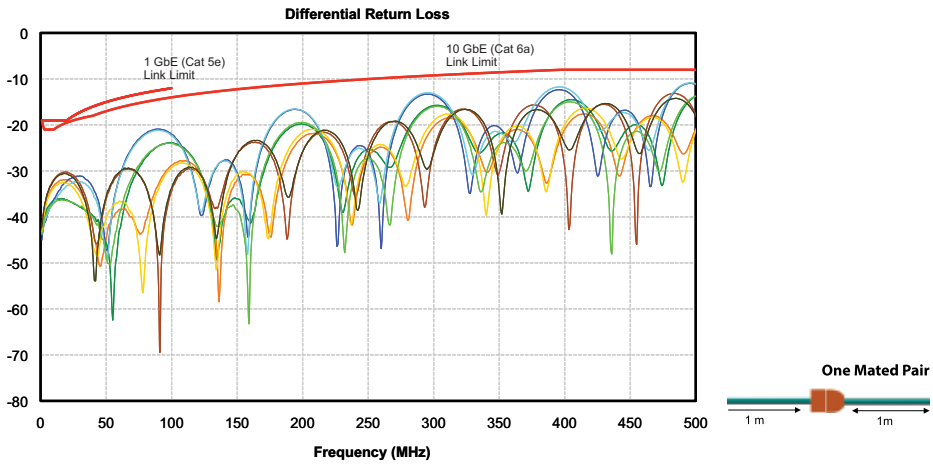





### Excellent Impedance Matching

CeeLok FAS-X connectors are designed to maintain a highly matched 100-ohm impedance, with excellent signal integrity.

### More High-Frequency Headroom

The design and close impedance matching of the CeeLok FAS-X connector helps give you more performance margin to tolerate noisy environments that are sensitive to harmful interference.

### Zero Bit Error Rate (BER) under Rugged Testing

The CeeLok FAS-X connector was tested by TE for bit errors for a high speed signal (1.0625 Gb/s) while simultaneously being subjected to random vibration and temperature cycling between -65°C and +200°C. No bit errors were detected.

For more information, request Test Reports 10065 and 20101203 from TE.

# Differential NEXT

## D38999 Size 11 Connector
## MOD Def Standard 23-04 Pinout

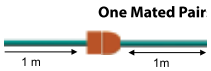


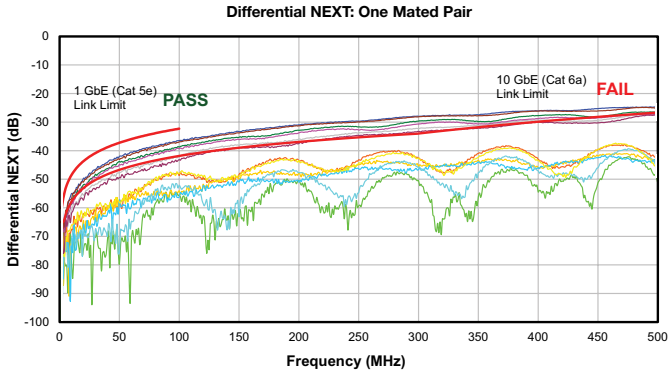


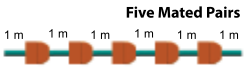


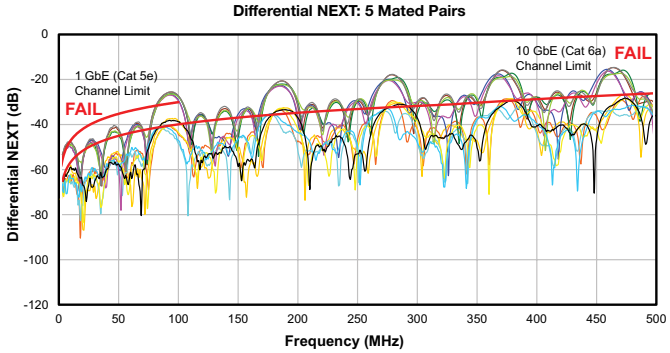


## CeeLok FAS-X Connector

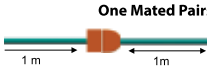


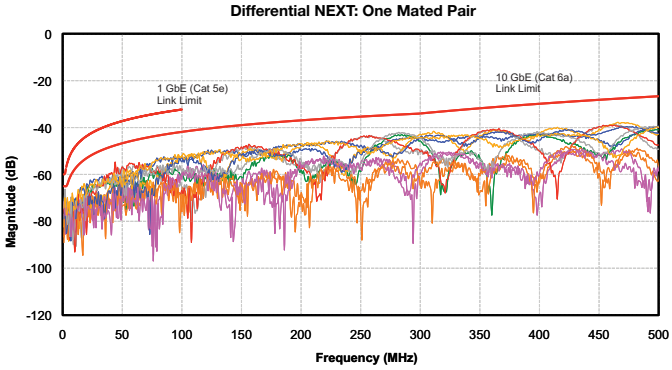


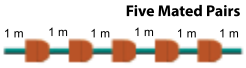


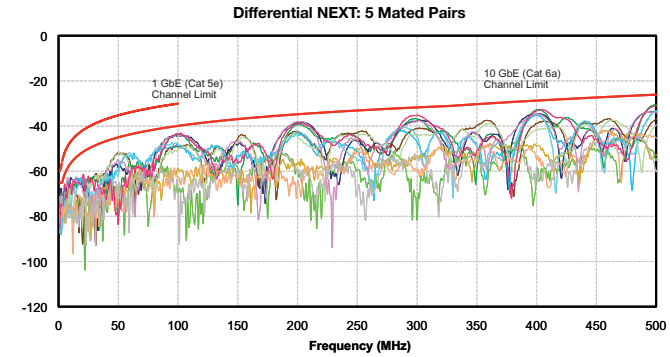

# Mil Connectors

## ORDERING INFORMATION

### Part Numbering System

**CFX20 J 2532 P Z N xxx**

**GENERAL IDENTIFIER**

- **CFX20** Square Flange Receptacle (38999)
- **CFX21** In-Line Receptacle (38999)
- **CFX24** Jam Nut Receptacle (38999)
- **CFX26** EMI/RFI Plug (38999)
- **CFX30** Square Flange Receptacle (Braid Clamp Backshell)
- **CFX34** Jam Nut Receptacle (Braid Clamp Backshell)
- **CFX36** EMI/RFI Plug (Braid Clamp Backshell)
- **CFX50** Square Flange Receptacle (Push-Pull Lanyard) (81703)
- **CFX54** Jam Nut Receptacle (Push-Pull Lanyard) (81703)
- **CFX58** Plug (Push-Pull Lanyard) (81703)
- **CFX59** Rack-and-Panel Plug (Push-Pull Lanyard) (81703)

**CLASS (MATERIAL AND FINISH)**

- **M** Nickel-Plated Composite
- **J** O. D. Cadmium-Plated Composite
- **F** Nickel-Plated Aluminum
- **W** O. D. Cadmium-Plated Aluminum
- **A** Passivated Stainless Steel
- **T** PTFE Nickel-Plated Aluminum
- **Z** Black Zinc Nickel-Plated Aluminum

**SHELL SIZE AND CONTACT ARRANGEMENT**

- **1108** Single-Channel, Shell Size 11, 8 Size 22 Contacts
- **2532** Quad-Channel, Shell Size 25, 32 Size 22 Contacts
- **1104** Single-Channel Fibre Channel, Shell Size 11
- **2516** Quad-Channel Fibre Channel, Shell Size 25
- **2500** Quad-Channel, Shell Size 25, No Inserts or Contacts

**CONTACT TYPE AND PLATING**

- **P** Pin, Selective Gold Plating
- **S** Socket, Selective Gold Plating
- **F** Pin, Full Gold Plating
- **G** Socket, Full Gold Plating
- **H** Pin, High-Reliability Finish
- **J** Socket, High-Reliability Finish
- **A** No Pin Contacts Included
- **B** No Socket Contacts Included

**TERMINATION TYPE**

- **Z** Crimp
- **A** .232" Long Solder Tail (Contact TE for other tail lengths)

**KEYING POSITIONS**

**N, A, B, C, D, E** (N is normal)

**MODIFICATIONS**

- **-1A** Without Backshell
- **-1077** Without Grommet

# Single-Channel D38999 Circular, Shell Size 11

## Square Flange Receptacle

CFX20*1108***

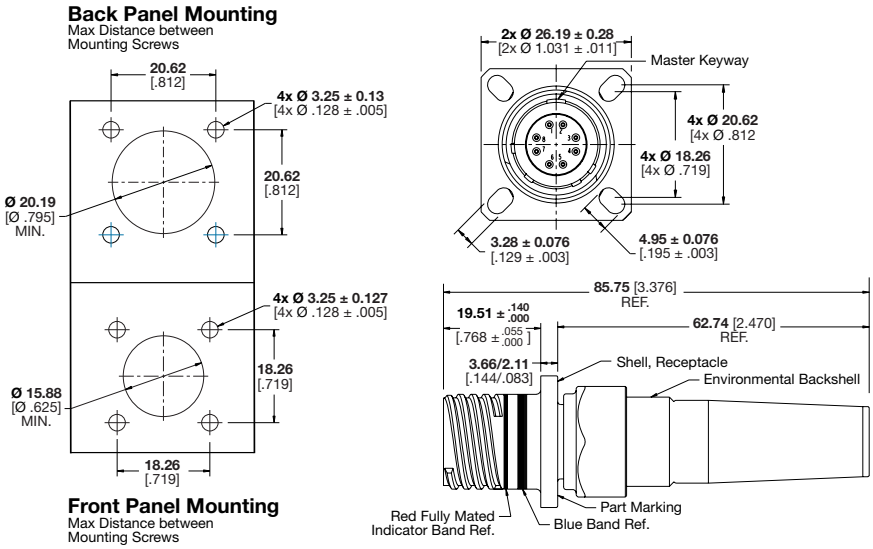


## Jam Nut Receptacle

CFX24*1108***

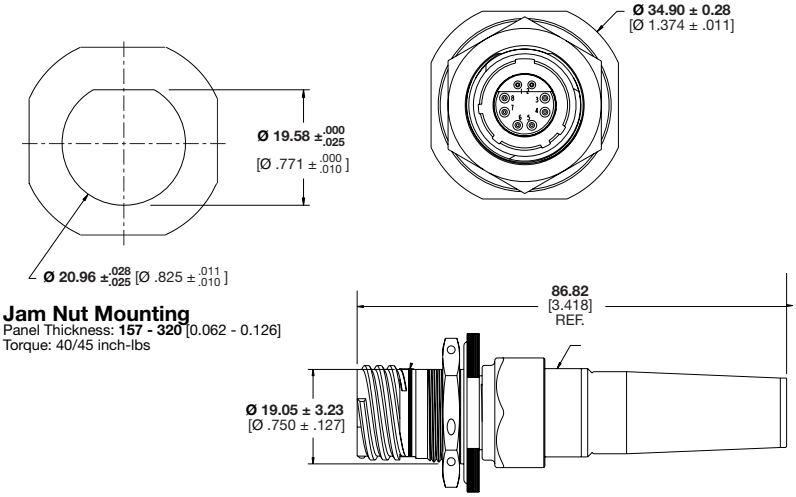


## Plug

CFX26*1108***

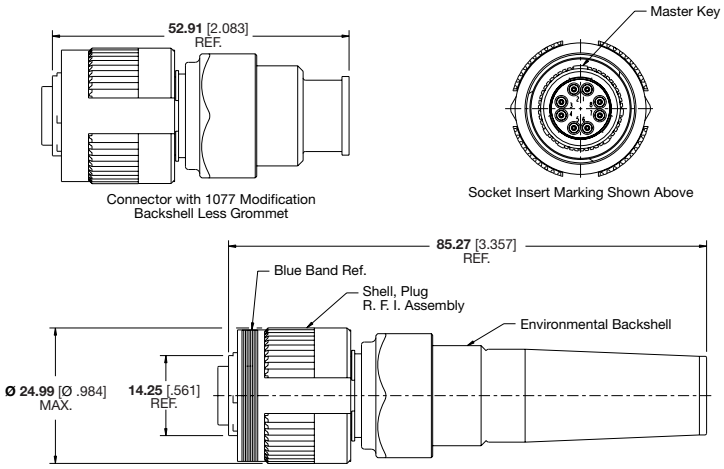

## Single-Channel D38999 Circular, Shell Size 11, PCB Mount

### Square Flange Receptacle

CFX20*1108***

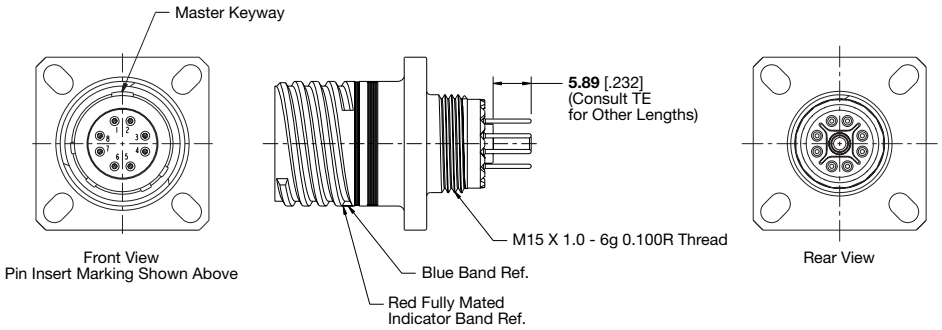


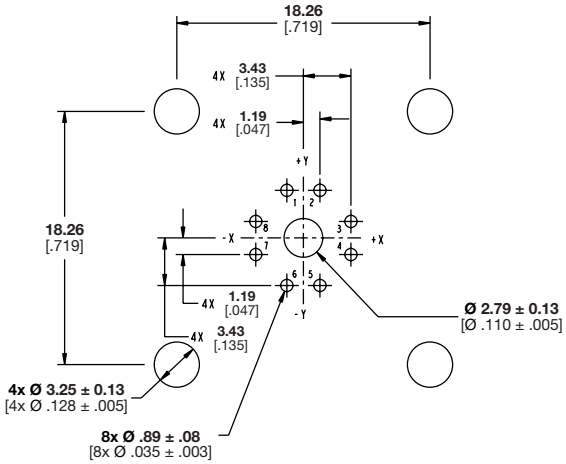


## Single-Channel D38999 Circular, Shell Size 11, PCB Mount

### Jam Nut Receptacle

CFX24*1108***

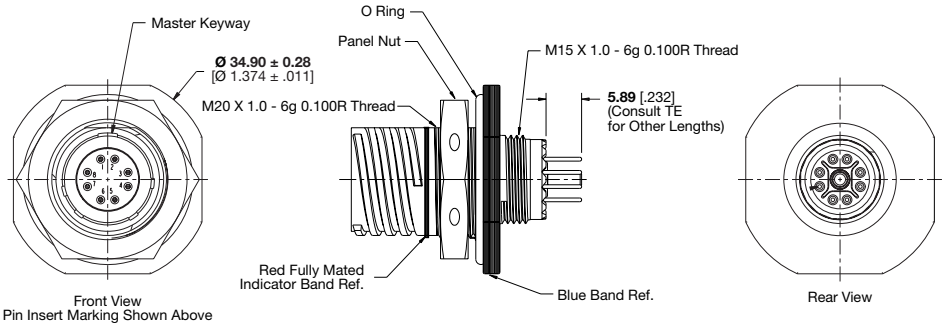


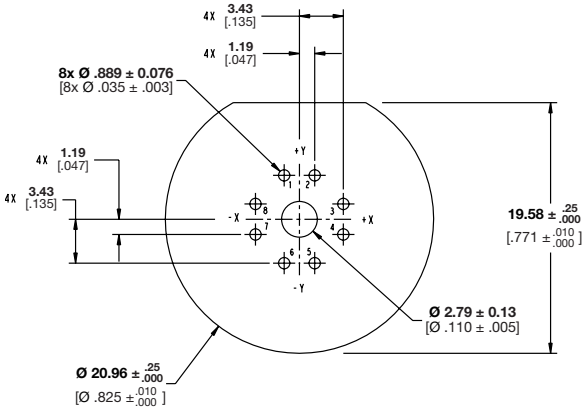

# Commercial Single-Channel Circular, Shell Size 11

## Square Flange Receptacle with Braid Clamp Backshell

CFX30*1108***

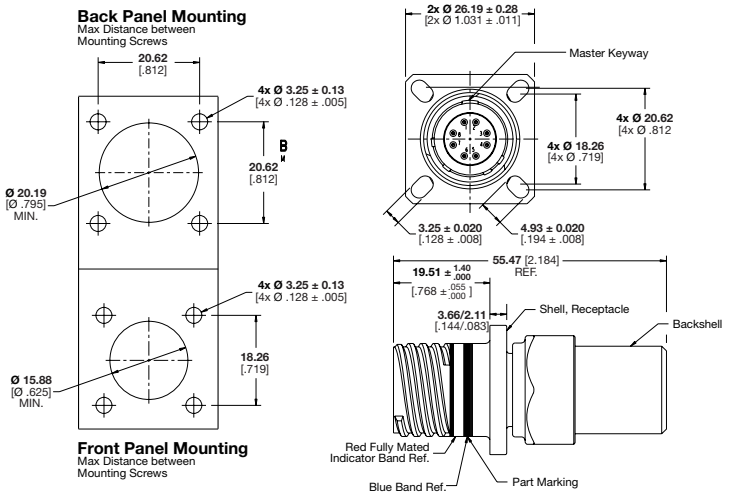


## Jam Nut Receptacle with Braid Clamp Backshell

CFX34*1108***

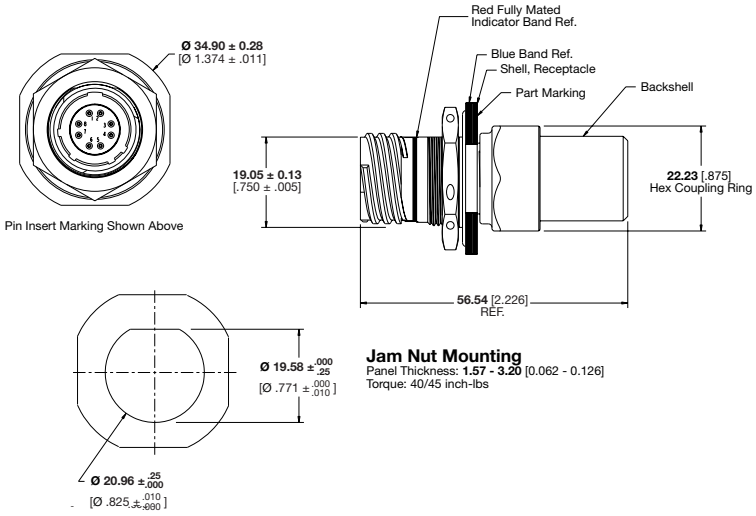


## EMI/RFI Plug with Braid Clamp Backshell

CFX36*1108***

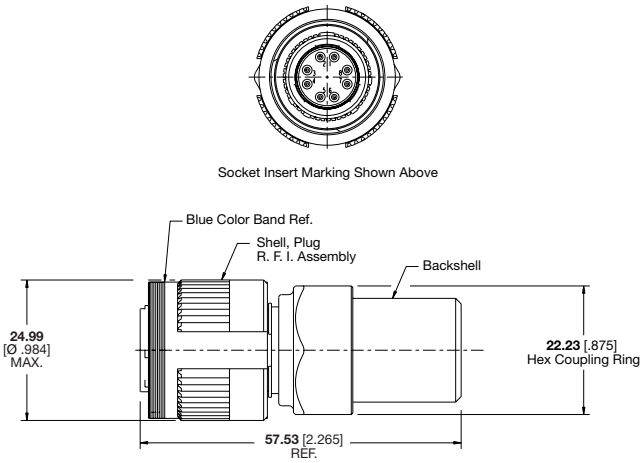

# Quad-Channel D38999 Circular, Shell Size 25

## Square Flange Receptacle

CFX20*2532***

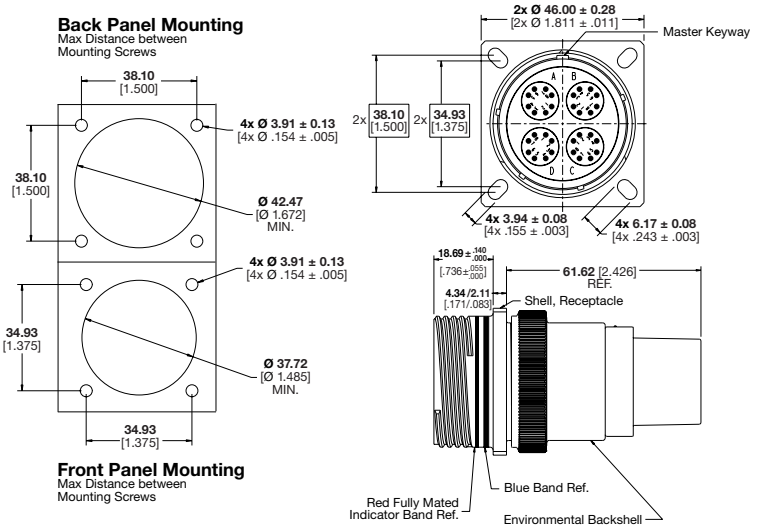


## Jam Nut Receptacle

CFX24*2532***

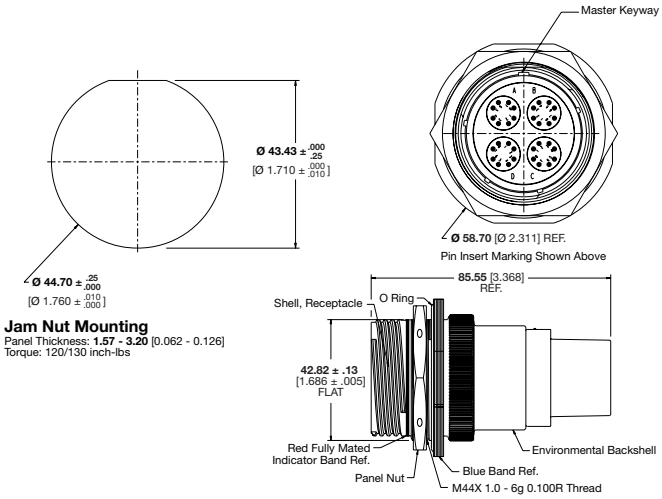


## Plug

CFX26*2532***

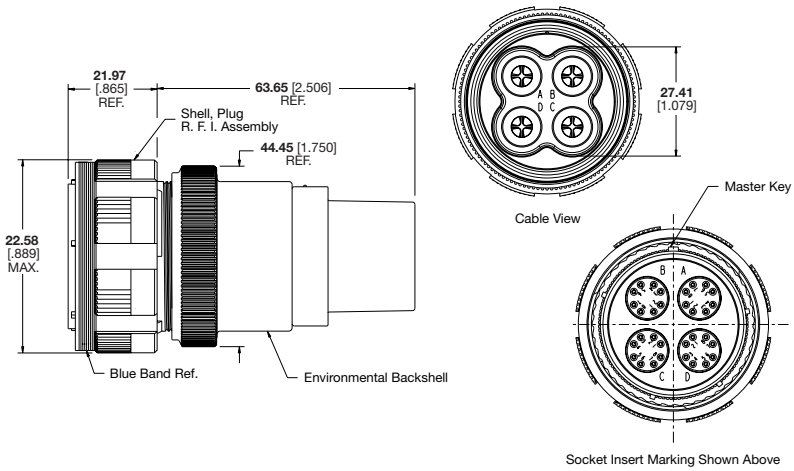

# Quad-Channel D38999 Circular, Shell Size 25

## Square Flange Receptacle

CFX20*2532***

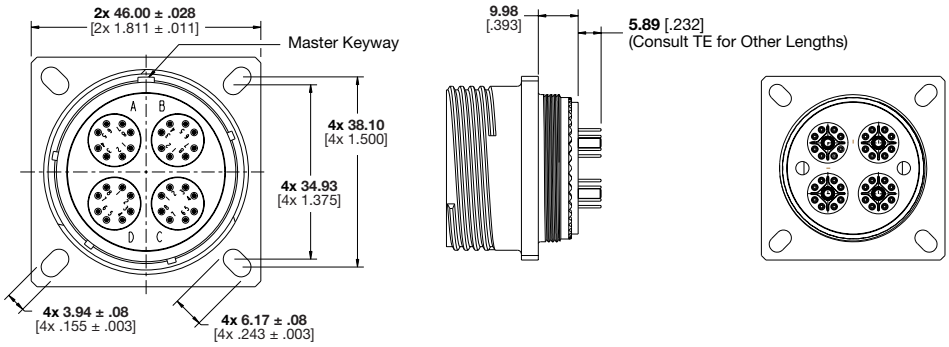


## PCB Layout

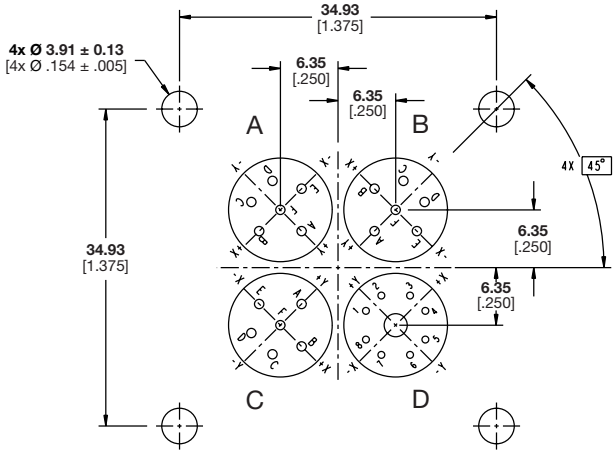

# Quad-Channel D38999 Circular, Shell Size 25

## Jam Nut Receptacle

CFX24*2532***

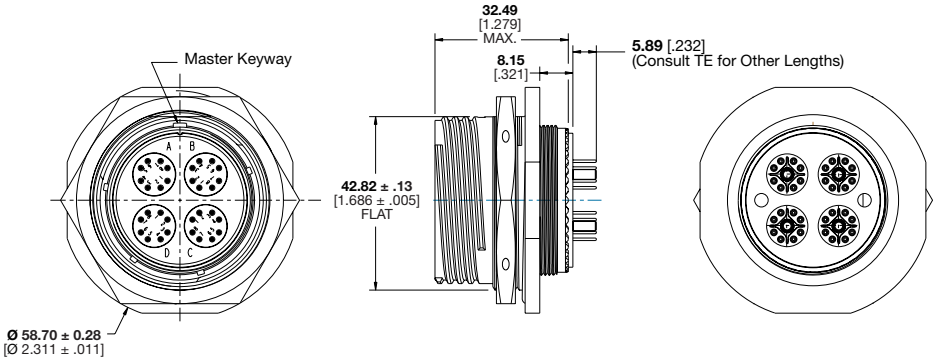


## PCB Layout

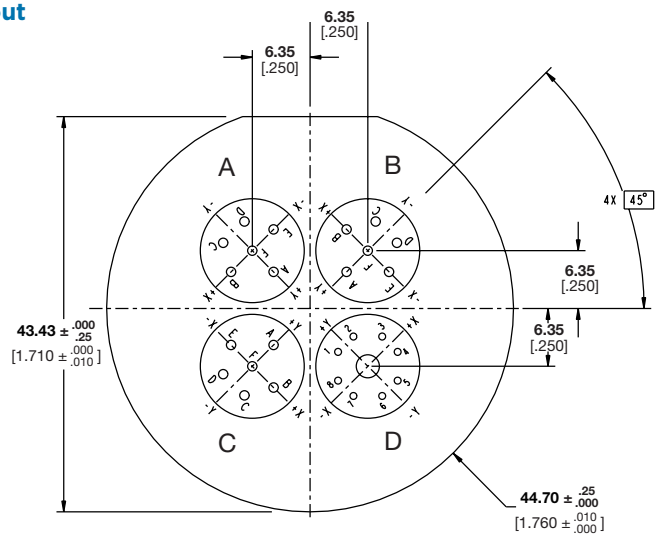

## CeeLok FAS-X Connector Modules

Ceelok FAS-X connectors are also available with a variety of modules to accommodate various counts of Size 22, 20, and 16 contacts in a Size 25 shell. Such capabilities help provide a convenient mixture of signal and power through the connectors.

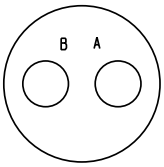


11-02
2 Size 16 Contacts

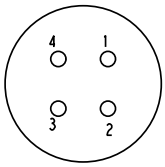


11-H4
4 Size 22 Contacts

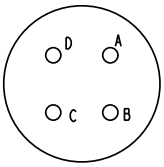


11-04
4 Size 20 Contacts

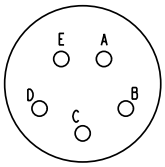


11-05
5 Size 20 Contacts

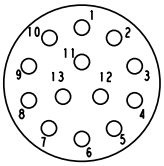


11-35
13 Size 22 Contacts

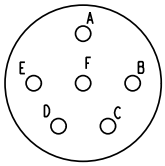


11-98
6 Size 20 Contacts

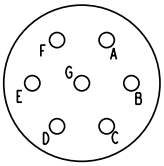


11-99
7 Size 20 Contacts

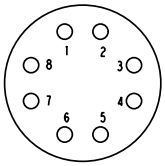


11-H8
8 Size 22 Contacts

**MFX 1105 P Z**

### PRODUCT LINE

**MFX** CeeLok FAS-X Connector Modules

### SHELL SIZE (11)/CONTACT ARRANGEMENT

**1102** 2 Size 16 Contacts
**11H4** 4 Size 22 Contacts (High-Speed Insert Optimized for 150-Ohm Quad Cable)
**1104** 4 Size 20 Contacts
**1105** 5 Size 20 Contacts
**11H8** 8 Size 22 Contacts (High-Speed Insert Optimized for 4-Pair 100-Ohm Differential Cables)
**1135** 13 Size 22 Contacts
**1198** 6 Size 20 Contacts
**1199** 7 Size 20 Contacts

### CONTACT PLATING

**P** Pin, Localized Gold Finish
**S** Socket, Localized Gold Finish
**F** Pin, Full Gold Finish
**G** Socket, Full Gold Finish
**H** Pin, High-Reliability Finish
**J** Socket, High-Reliability Finish
**A** Less Pin
**B** Less Socket

### TERMINATION TYPE

**Z** Crimp Contacts
**A - Y** Extended PCB Tail Contacts (Consult TE)

# CeeLok FAS-X Connector Modules

## Adapters

Tinel-Lock backshell adapters are available to provide reliable braided shield termination using Tinel-Lock rings and accommodate a lipped heat-shrink boot.

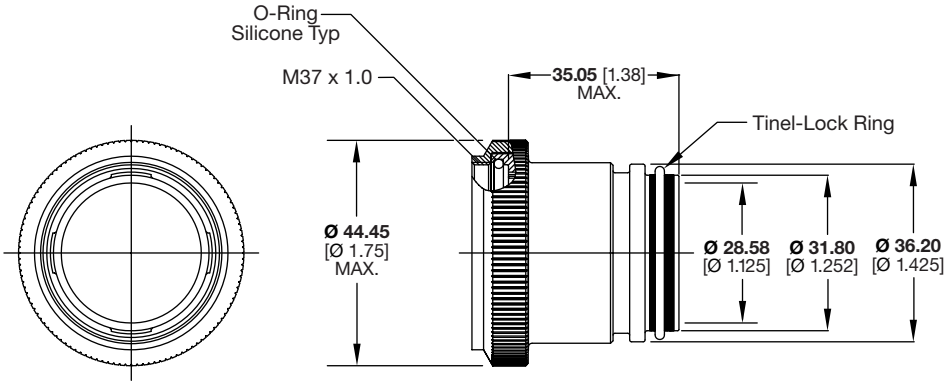


**Part No.**

**TXS201 A X 00-24 BI**

**TXS201 A X 00-24 AI**

Aluminum alloy body with nickel PTFE plating

BI = Tinel-Lock ring for dual-layer 36 AWG or single layer 30 AWG braid shields

AI = Tinel-Lock ring for single layer 26 AWG braid shields

Consult your TE representative for other plating and shield termination options.

# CeeLok FAS-X Connector Modules

## Size 22D Contacts

28 – 22 AWG wire
.160 to .190
recommended
strip length

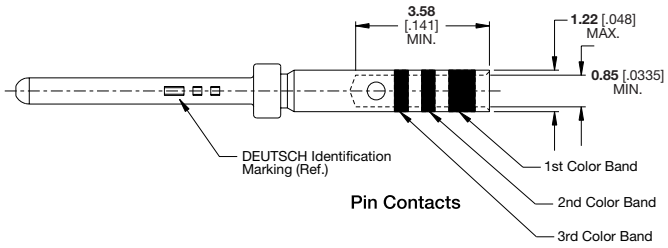


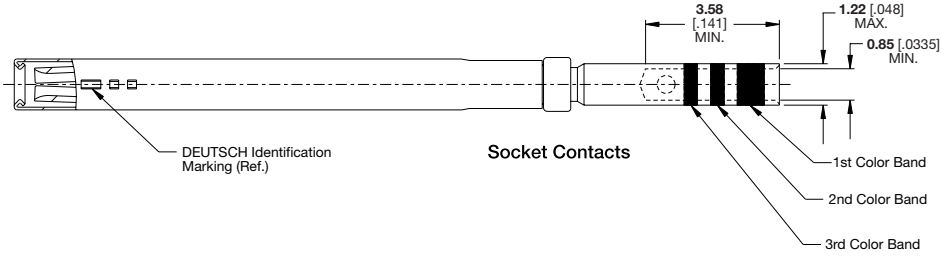


| Type | Military Part No. | TE DEUTSCH Part No.* | Color Bands | | | Crimp Tool | |
|---|---|---|---|---|---|---|---|
| | | | 1st | 2nd | 3rd | Basic Tool | Positioner |
| Pin | M39029/107-620 | 12331-22 | Blue | Red | Black | M22520/2-01 | M22520/2-09 |
| | M39029/58-360 | 38941-22, 38941-22L | Blue | Brown | Yellow | M22520/7-01 | M22520/7-07 |
| Socket | M39029/106-614 | 12333-22 | Orange | Blue | Black | M22520/2-01 | M22520/2-07 |
| | M39029/56-348 | 38943-22, 38943-22L | Orange | Yellow | Gray | M22520/7-01 | M22520/7-05 |

*12331-22 and 12333-22 are high-durability contacts rated for 1500 mating cycles.
38941-22x and 38943-22x are standard durability contacts rated for 500 mating cycles.
The L suffix indicates localized plating; otherwise plating is standard.

**HIGH PERFORMANCE**

- Wide temperature range: -40°C to +120°C
- Shock, vibration, and impact resistant
- Sealed to IP68 standards

**RUGGED**

- Fully enclosing aluminum, marine bronze and stainless steel shells
- MIL-DTL-38999 series III-style polarized shells
- Positive cordset retention >100 N axial force

**SECURE**

- One turn self-locking coupling
- UL 94 V0 low smoke
- RoHS compliant

# POLAMCO USB Connector Systems

## USB 2.0 and 3.0 38999 Series III-Style Connectors for Harsh Environments

The POLAMCO high-speed USB connector system incorporates a MIL-DTL-38999 Series III-style metal shell with full 360° shielding and mechanical protection.

These USB connector systems have been designed to help meet the requirements of high-speed data connections where reliability through environmental sealing and full mechanical protection are required.

Each USB connector is designed to help handle high levels of shock, vibration and mechanical impact, and is sealed to IP68 standards to help resist fluids and dust for long-term reliable performance.

Three styles using 38999 shells are available:

USB 2.0 Type A

USB 2.0 Type B

USB 3.0 Type A

The USB 2.0 connectors achieve data rates to 480 Mb/s, while USB 3.0 connectors are capable of 5 Gb/s data rates.

# Specifications

## SHELL MATERIALS

- **Shell:** Aluminum, marine bronze, stainless steel
- **Finishes:**
  (Over aluminum with electroless nickel underplating, unless noted):
  Electroless nickel
  Olive drab cadmium
  Olive drab zinc cobalt
  Black zinc cobalt
  Passivated black zinc nickel
  Passivated (Stainless steel shell)
  Unplated (Nickel aluminum bronze shell)
- **Seal:** Silicone elastomer, fluorosilicone
- **O-Ring:** Silicone
- **Insulator:** Polyphenylene sulfide, UL 94, black
- **Potting:** Clear silicone encapsulant

## USB MATERIALS

- **Contacts:**
  **USB 2.0:** Nickel, selectively gold plated at 30µ
  **USB 3.0:** Nickel, selectively gold plated at 0.76µm
- **Shielding:** Nickel-plated brass
- **Body:** Polyamide, UL 94V-0
- **PCB:** FR4, UL 94V-0 (PCB termination only)

## DATA TRANSMISSION

- **USB-A 2.0:** 480 Mb/s
- **USB-B:** 60 Mb/s
- **USB 3.0:** Up to 5 Gb/s

## ELECTRICAL

- **Voltage:** 30 VAC
- **Current Rating:** 1 A max. per contact
  (1.8 A max. USB 3.0 pins 1 and 4)

## ENVIRONMENTAL/MECHANICAL

- **Temperature Ranges:** -40°C to +120°C
- **Fluid Resistance:** IP68 (mated)
- **Cable Retention:** >100 N (22.4 lbs.) axial force
- **Durability:**
  **USB 2.0:** >500 mating cycles
  **USB 3.0:** 5000 mating cycles

## USB Connector Options

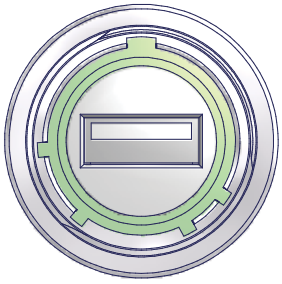

USB-A 2.0

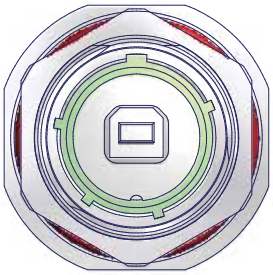

USB-B

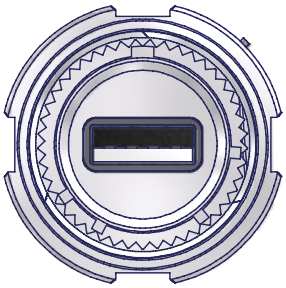

USB 3.0

## Connector Orientation Options

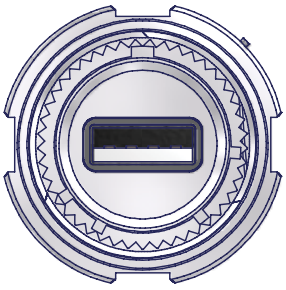

X
(Standard)

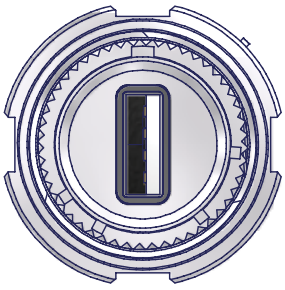

Y

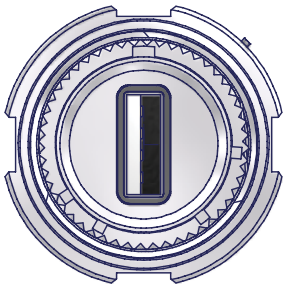

Z

# POLAMCO USB Connector Systems

## POLAMCO USB-A 2.0 38999-Style Connectors
### Plug

**Series**
PC4D0021: Size 15 Memory Plug Assembly (Standard)
PC4D0048: Size 15 Memory Plug, Isolated
PC4D0059: Size 15 Memory Plug, Kit
PC4D0021: Size 15 Memory Plug, Anti-Tamper

### Receptacle

**Series**
PC4B0054: In-Line Receptacle, Solder (Standard)
PC4B0089: In-Line Feedthrough Receptacle

### Jam Nut, Bulkhead-Mount Feedthrough

**Series**
PC4F0027: Sealed Feedthrough (Standard)
PC4F0049: Sealed Feedthrough (Standard)

### Jam Nut Feedthrough Receptacle

**Series**
PC4F0009: Size 15 Feedthrough
PC4F0043: Size 15 Feedthrough, Solder
PC4F0030: Size 15 Feedthrough with Stand-Offs
PC4F0059: Size 15 Feedthrough, Sealed
PC4F0016: Size 15 Feedthrough (Standard)
PC4F0031: Size 17 Assembly
PC4F0032: Size 17 Assembly, Solder

### Square Flange Bulkhead-Mount Feedthrough

**Series**
PC4B0064: Size 15 Feedthrough Assembly

**HIGH PERFORMANCE**

- Shock, vibration and impact resistant
- Internal grounding fingers for excellent continuity
- Wide temperature range: -40°C to +120°C

**CONVENIENT**

- No assembly tooling required
- Fast, secure coupling
- RJ45 connectors supplied as kit

**RUGGED RELIABILITY**

- Rugged 38999 connectors and plugs
- Sealed to IP 68 standards
- Fully grounded from shielded RJ45 plug to 38999 shell

**VERSATILE**

- Keyway and insert orientations enable 24 total configurations
- Wide range of accessories available
- Fully field repairable

# POLAMCO RJ45 Series Connectors

## POLAMCO Cat 5 and Cat 6a 38999-Style Connectors for Harsh Environments

The POLAMCO high-speed RJ45 connector system incorporates a MIL-DTL-38999 Series III-style metal shell with full 360-degree shielding and mechanical protection.

These connectors have been designed to help meet the requirements of high-speed data connections where reliability through environmental sealing and full mechanical protection are required.

Tested by TE to 10 Gb/s data rates, the connector shells are available in your choice of aluminum, nickel aluminum bronze, and stainless steel for rugged, reliable performance.

The connectors are fully grounded from the shielded RJ45 plug to the 38999-style connectors. Each is designed to help handle high levels of shock, vibration and mechanical impact, and sealed to IP68 standards to help resist fluids and dust for long-term reliable performance.

# Specifications

## SHELL MATERIALS

- **Shell:** Aluminum, nickel aluminum bronze, stainless steel
- **Finishes:**
  (Over aluminum with electroless nickel underplating, unless noted):
  Electroless nickel
  Olive drab cadmium
  Olive drab zinc cobalt
  Black zinc cobalt
  Passivated black zinc nickel
  Passivated (Stainless steel shell)
  Unplated (Nickel aluminum bronze shell)
- **Seal:** Silicone elastomer, fluorosilicone
- **O-Ring:** Silicone elastomer
- **Insulator:** Polyphenylene sulfide, UL 94, black
- **Potting:** Clear silicone encapsulant and polyetherimide resin

## RJ-45 MATERIALS

- **Contacts:** Copper, selectively gold plated
- **Shielding:** Nickel-plated brass
- **Body:** Polyamide, UL 94V-0
- **PCB:** FR4, UL 94V-0 (PCB termination only)

## ELECTRICAL

- **Voltage:** 50 VDC/35 VAC
- **Current Rating:** 2.1 A at 70°C
- **Category Rating:** Cat 5 or Cat 6a

## ENVIRONMENTAL/MECHANICAL

- **Temperature Range:** -40°C to +120°C
- **Fluid Resistance:** Sealed to IP68 for fluid and dust resistance
- **Cable Retention:** >100 N (22.4 lbs.) axial force

### RJ-45 Orientation Options

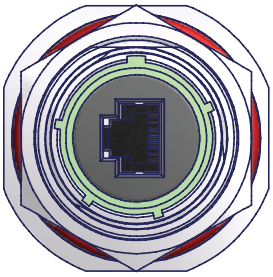

W

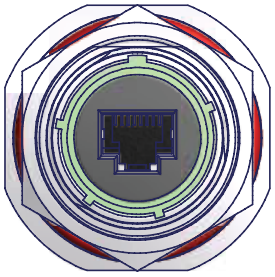

X
(Standard)

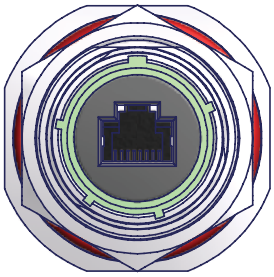

Y

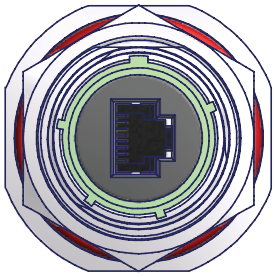

Z

# POLAMCO RJ45 38999-Style Connectors

## Plug

**Series**
PC4D0024: Cat 6a
PC4D0042: Cat 6a, Field Installable
PC4D0002: Cat 5

## Jam Nut Receptacle

**Series**
PC4F0020: Cat 6a, Feedthrough (Standard)
PC4F0023: Cat 6a, 90° Feedthrough
PC4F0084: Cat 6a, Sealed Feedthrough
PC4F0034: Cat 6a,  Solder
PC4F0025: Cat 6a,  PCB Mount
PC4F0002: Cat 5 Feedthrough (Standard)

## Square Flange Receptacle

**Series**
PC4B0029: Cat 6a Feedthrough
PC4B0102: Cat 6a Sealed Feedthrough
PC4B0038: Cat 6a 90° Feedthrough
PC4B0076: Cat 6a PCB Mount
PC4B0002: Cat 5 Feedthrough (Standard)

## Bulkhead-Mount Feedthrough

**Series**
PC4B0103: Cat 6a Square Flange
PC4F0085: Cat 6a, Jam Nut
PC4B0002:  Cat 5e Square Flange
PC4F0002: Cat 5 Jam Nut

Cable assemblies are also available in a variety of configurations. Consult TE.

# POLAMCO RJ45 38999-Style Connectors

**Typical Part Numbering System**
(Not all options are available with every series. Additional options available. Consult TE)

**PC40084 H 19 N X 1 C BT**

**SERIES**

**SEALING OPTION (Unmated)**
Omit For No Special Sealing
**S** Pressure Tested to 1 Bar
**H** Hermetic (<1.0 x $10^{-6}$ Std. cc/s He)

**SHELL SIZE**
**19**

**KEY ARRANGEMENT**
**N, A, B, C, D, E**

**INSERT ROTATION**
**W, X, Y, Z**

**MATERIAL**
**1** Aluminum
**2** Nickel Aluminum Bronze
**4** Stainless Steel

**FINISH**
**ALUMINUM SHELL**
**C** Electroless Nickel
**B** Oliver Drab Cadmium
**ZB** Olive Drab Zinc Cobalt
**ZK** Black Zinc Cobalt
**ZN** Passivated Black Zinc Nickel
**STAINLESS STEEL SHELL**
**J** Passivated
**NICKEL ALUMINUM BRONZE SHELL**
**Z** Unplated

**BACKSHELL OPTION (Optional)**
**005** Cable Seal
**BT** Boot

## WIDE RANGE

- Physical contact (PC) and expanded beam (EB) interface styles
- Suitable for use across multiple applications and markets, including as military ground, military and commercial aerospace, C5ISR and marine

## EASE OF USE

- Rear-removable optical termini
- Removable front inserts for ease of access to optical termini — helping to support simple, effective cleaning and maintenance of termini
- Lens protected EB inserts and termini help protect the fiber core behind the lens and help optimize the performance of the optical link

## PRECISION CONNECTIONS

- Dowel pin alignment
- Standard and tight-tolerance keying

## RUGGEDNESS

- Environmental sealing
- Anti-vibration coupling mechanisms

# Fiber Optic Connectors

PC Connector

EB Connector

## 38999 Series III Style

As a trusted leader in optical technology with over 40 years of experience in supplying optical solutions for harsh environments, TE offers high-performance 38999-style connector solutions that are also easy to maintain in the field. Our products are designed to operate reliably in harsh and challenging environments, and the company's technical specialists have an in-depth understanding of application requirements.

- **MC801 Connectors:** Industry-standard 1.25-mm ARINC 801 termini
  Up to 32 fibers
- **MC3 Mk II Connectors:** DEUTSCH 2.5-mm termini
  5, 8, 12 fibers
- **MC4 Connectors:** DEUTSCH 2.5-mm termini
  2 fibers in a size 9 shell
- **MC5 Connectors:** DEUTSCH 1.25-mm termini
  1, 2, 4, 6, 8, 10, 18, 24, 30 fibers
- **MC6 Connectors:** Single MT ferrule in size 11 shell
  2, 4, 8, 12, 24, 48 channels
- **AviMT Connectors:** Four MT ferrules in size 21 shell
  Up to 96 fibers
- **Qualified Connectors:** MIL-T- 29504/4 and /5 termini
  Fit standard size 16 cavities
- **PRO BEAM Connectors:** Use PRO BEAM EB inserts
  1, 2, 4, 8 fibers in size 11 or 15 shell
- **EB16 Termini:** EB termini
  Fit standard size 16 cavities

## Physical Contact (PC) Connectors

A PC connection uses optical ferrules that are mated within an alignment sleeve and holder to help ensure minimal optical losses and repeatable alignment. The termini can be incorporated into standard circular and rectangular connector to offer multi-channel solutions. PC connections offer

- Low insertion loss
- Low reflection
- High density

While most PC connectors use a ceramic ferrule for a single fiber, the MT ferrule is a multifiber variation typically holding 12 or 24 fibers.

PC solutions offer a higher optical density (Number of channels) and can be used in conjunction with EB interconnects to minimize system losses.

The majority of termini solutions available from TE are spring loaded to help prevent optical discontinuities under shock and vibration.

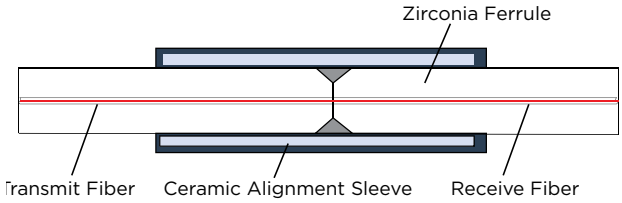


## Expanded Beam (EB) Connectors

EB connectors expand and re-focus light at the fiber end faces and allow an air gap in the optical pathway. The EB concept uses optical lenses (typically a 3-mm ball lens for dedicated inserts or 1.25-mm lens for EB16 termini) to expand and collimate the beam emitted from the launch fiber.

The expanded beam remains collimated across the mechanical interface until the receiving lens focuses the beam onto the receiving fiber.

Standard channel counts for EB-specific connectors are 1, 2, 4 and 8. Since these connectors are used in rugged and tactical environments, they are usually terminated on robust ruggedized, metal-tubed, and avionics/flight-grade cable.

The EB16 optical termini employs the same technology from the well-established dedicated inserts into a termini that can be used in 38999 Series III size 16 cavities to allow for flexibility and higher fiber counts.

The absence of physical fiber contact makes EB connectors very useful in demanding environments. They offer:

- Sealed optical interface
- High vibration and shock resistance
- High mating-cycle durability
- Tolerance to dirt and debris
- Easy cleaning

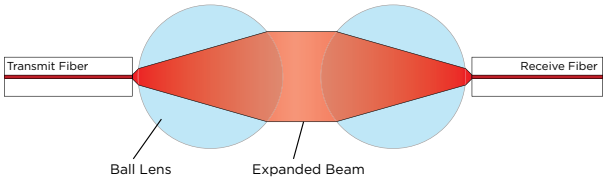


### Comparison of PC and EB Connector Technologies

| Performance Criteria | PC | EB |
|---|---|---|
| Insertion Loss | ★★★★ | ★★ |
| Return Loss (SM) | ★★★★ | ★★ |
| Return Loss (SM)—Unmated | ★ | ★★ |
| Lateral Connector Misalignment | ★ | ★★★★ |
| Connector Angular Tilt | ★★★★ | ★ |
| Mating Durability | ★★★ | ★★★★ |
| Water Exposure | ★★★ | ★★ |

| Performance Criteria | PC | EB |
|---|---|---|
| Dust Exposure | ★★★★ | ★★★ |
| Vibration Susceptibility | ★★ | ★★★ |
| Repair | ★★ | ★★ |
| Cleanability | ★★ | ★★★ |
| Wear | ★ | ★★★ |
| Wavelength Range | ★★★★ | ★★ |

**RELIABLE**

- Genderless pull-proof contact design
- Precise alignment of optical interface
- Spring-loaded termini maintain optical contact during shock, vibration, and thermal extremes

**EASY TO USE**

- Removable alignment insert for easy inspection and cleaning
- Field terminable
- Uses standard size 16 insertion/extraction tools

**HIGH PERFORMANCE**

- Low loss
- PC and APC end face finishes for multimode and single mode applications
- Helps reduces overall system losses

**FLEXIBLE**

- Eight shell sizes for 2 to 32 fibers
- Range of shell materials and finishes to help meet various application demands

**PROVEN PEDIGREE**

- Widely used termini in aerospace and military applications
- Meets ARINC 801.3 requirements
- MIL-DTL-38999 Series III-style shells
- Use widely available 38999 backshells and accessories

**COMPATIBLE**

- Fully intermateable with other qualified ARINC 801/38999 connectors

# MC801 Connectors

## 38999 Series III-Style Fiber Optic Connectors

The MC801 connector combines the high performance of ARINC 801 optical termini with the convenience of a familiar D38999 Series III connector style.

The connector's threaded coupling and the termini's spring-loaded design make an excellent solution for high-vibration applications. The compact 1.25-mm ferrule provides a high-density solution—with up to 32 fibers in a size 25 shell. The 38999-style connector offers scoop-proof mating, a wide selection of materials and finishes, six keying options, and compatibility with standard 38999 backshells and hardware.

Optical alignment is achieved with a thermoplastic insert containing precision zirconia alignment sleeves. Inserts, which are available for use with either the plug or receptacle, are removable to simplify cleaning. Stainless steel dowel pins also aid alignment during mating.

# MC801 Connectors

## 38999 Series III-Style Fiber Optic Connectors

## Specifications

### MATERIALS

- **Shell:** Aluminum, stainless steel, marine bronze, and composite
- **Finishes:** Nickel, black zinc nickel, passivated, olive drab cadmium
- **Insert and Alignment Sleeve Holder:** Thermoplastic
- **Alignment Dowel Pins:** Stainless steel
- **Alignment Sleeve:** Zirconia
- **Ferrule:** Zirconia
- **Terminus Body and Crimp Sleeve:** Nickel-plated copper
- **Spring:** Stainless steel

### OPTICAL PERFORMANCE

- **Insertion Loss:** 0.10 dB multimode
  0.20 dB single mode (APC finish)
- **Return Loss:** Up to -65 dB (single mode, APC finish)
- **Insertion loss tested against a reference patchcord:** IEC 61300-3-4 Method B; also described in ARINC 805 Return Loss: IEC 61300-3-6; also described in ARINC 805

### ENVIRONMENTAL/MECHANICAL PERFORMANCE

- **Temperature Range:** -65°C to +85°C
- **Durability:** 100 mating cycles
- **Random Vibration:** No discontinuities >1 dB in excess of 1 µs (TIA/EIA-455-32 Test Condition B)
- **Mechanical Shock:** No discontinuities >1 dB in excess of 1 µs (100 g, 6 ms half-sine pulse)
- **Altitude Immersion:** 50,000 ft. (15,200 m)

### SPECIFICATIONS

- **Product Specification:** D108-32105
- **Qualification Test Reports:** D501-32031 (Multimode)
  D501-32105 (Single Mode)

# MC801 Connectors

## 38999 Series III-Style Fiber Optic Connectors

### Jam Nut Receptacle Connector

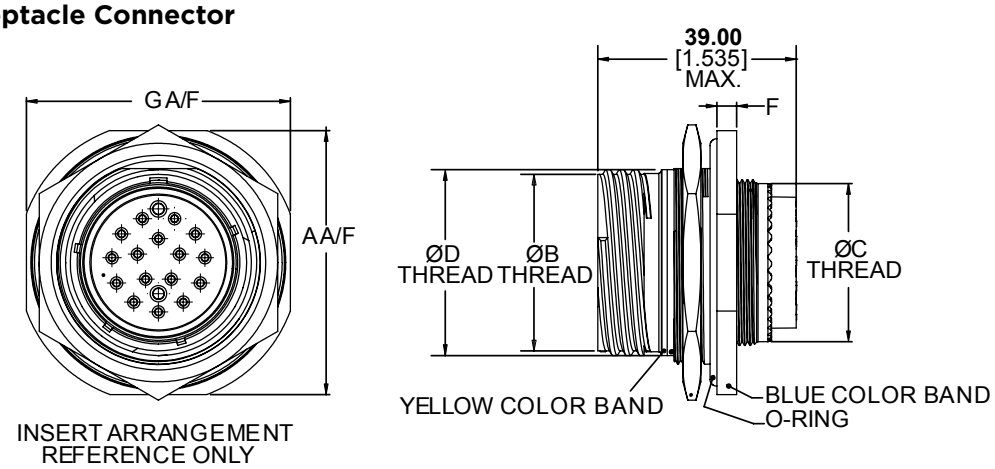


| Insert | ØA | B Thread Stub 60° Mod 1P-3L Class 2A (in) | ØC | ØD | ØE | F | G |
|---|---|---|---|---|---|---|---|
| **11-02** | **31.80**<br>1.252 | 0.7500 | M15 x 1.0 | M20 x 1.0 | **34.90**<br>1.374 | **2.84**<br>0.112 | **26.75**<br>1.053 |
| **13-04** | **34.90**<br>1.374 | 0.8750 | M18 x 1.0 | M25 x 1.0 | **38.10**<br>1.500 | | **31.75**<br>1.250 |
| **15-06** | **38.10**<br>1.500 | 1.0000 | M22 x 1.0 | M28 x 1.0 | **41.30**<br>1.626 | | **35.74**<br>1.407 |
| **17-08** | **41.30**<br>1.626 | 1.1875 | M25 x 1.0 | M32 x 1.0 | **44.50**<br>1.752 | | **36.75**<br>1.447 |
| **19-12** | **46.00**<br>1.811 | 1.2500 | M28 x 1.0 | M35 x 1.0 | **49.20**<br>1.937 | **3.61**<br>0.143 | **40.74**<br>1.604 |
| **21-16** | **49.20**<br>1.937 | 1.3750 | M31 x 1.0 | M38 x 1.0 | **52.40**<br>2.063 | | **45.75**<br>1.801 |
| **23-24** | **52.40**<br>2.063 | 1.5000 | M34 x 1.0 | M41 x 1.0 | **55.60**<br>2.189 | | **49.76**<br>1.959 |
| **25-32** | **55.60**<br>2.189 | 1.6250 | M37 x 1.0 | M44 x 1.0 | **58.70**<br>2.311 | | **50.98**<br>2.007 |

**Millimeters** Inches

### Insert Arrangements

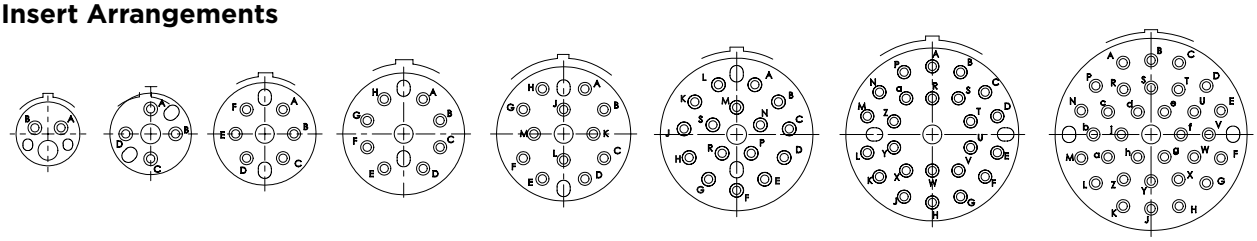

**11-02** **13-04** **15-06** **17-08** **19-12** **21-16** **23-24** **25-32**

# MC801 Connectors

## 38999 Series III-Style Fiber Optic Connectors

### Part Number/Ordering Information

**MC801 6 — K — 11-02 S N**

**PRODUCT FAMILY**
**MC801**

**SHELL STYLE**
- **0** Square Flange Receptacle
- **6** Plug
- **7** Jam Nut Receptacle

**SHELL MATERIAL AND FINISH**
- **B** Aluminum Bronze, Unplated
- **C** Composite, Cadmium Plated
- **D** Composite, Zinc Nickel Plated
- **F** Aluminum, Nickel Plated
- **K** Stainless Steel, Passivated
- **N** Composite, Nickel Plated
- **W** Aluminum, Cadmium Plated
- **Z** Aluminum, Zinc Nickel Plated

**INSERT (SHELL SIZE—NUMBER OF FIBERS)**
**11-02, 13-04, 15-06, 17-08, 19-12, 21-16, 23-24, 25-32**

**ALIGNMENT STYLE**
- **P** "Pin"—No Alignment Insert
- **S** "Socket"—With Removable Alignment Insert

**KEYING**
- **N** Normal
- **A, B, C, D, E**

### ARINC 801 Termini

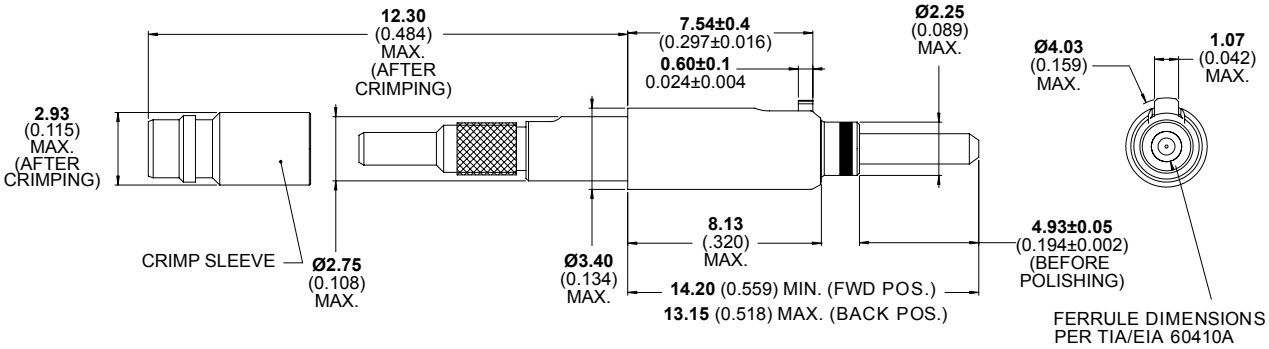


| Fiber Type | Part No. | | | |
|---|---|---|---|---|
| | Tight Jacket | | Loose Jacket | |
| | 1.8 mm Cable | 900µm Buffer Cable | 1.8 mm Cable | 900 µm Buffer Cable |
| **Single Mode** | 459266-126S-02-1 | 459266-126S-00-1 | 459265-126S-02-1 | 459265-126S-00-1 |
| **Single Mode, APC** | 459266-125A-02-1 | 459266-125A-00-1 | 459265-125A-02-1 | 459265-125A-00-1 |
| **Single Mode** | 459266-126M-02-1 | 459266-126M-00-1 | 459265-126M-02-1 | 459265-126M-00-1 |

Note: Customer drawings, models, additional product information, and instruction sheets are available at te.com.

## EASY TO USE

- Color band indicates full mating
- Insert-to-insert keying assists precision alignment
- Individual rear insertable/ removable optical contacts enable easy assembly
- Removable alignment sleeve for easy cleaning
- Simple termination and tooling

## RUGGED RELIABILITY

- Spring loaded optical contacts maintain physical contact under severe shock or vibration conditions
- Precision 2.5 mm zirconia ferrules and alignment
- Excellent repeatable optical performance
- MIL-DTL-38999 Series III anti-vibration coupling mechanism and tri-start thread

## VERSATILE

- Backshells and adaptors available for most single and multifiber cable
- Alternative shell keyway orientations prevent mismating
- Dynamic O-ring seal between mating shells for water submersion capability

# DEUTSCH MC3 MkII Fiber Optic Connectors

### MIL-DTL-38999 Series III Style Connectors

The DEUTSCH MC3 MkII Series ruggedized connectors incorporate individual rear-insertable optical contacts. The removable socket insert helps support easy access to the optical faces to help simplify cleaning and maintenance.

The MC3 MkII Series uses a removable alignment insert for easy cleaning (can be specified in both plug and receptacle shells), and is suitable for use with most single mode and multimode optical fibers with core diameters from 5 to 200 µm. 5, 8, 12 optical channels are accommodated in the MIL-DTL-38999 Series III-style connector shells.

Featuring spring-loaded optical contacts, tri-start threads and anti-vibration couplings, MC3 MkII connectors are a rugged choice for use in many severe environments and tough application conditions.

# DEUTSCH MC3 MkII Fiber Optic Connectors

## MIL-DTL-38999 Series III Style Connectors

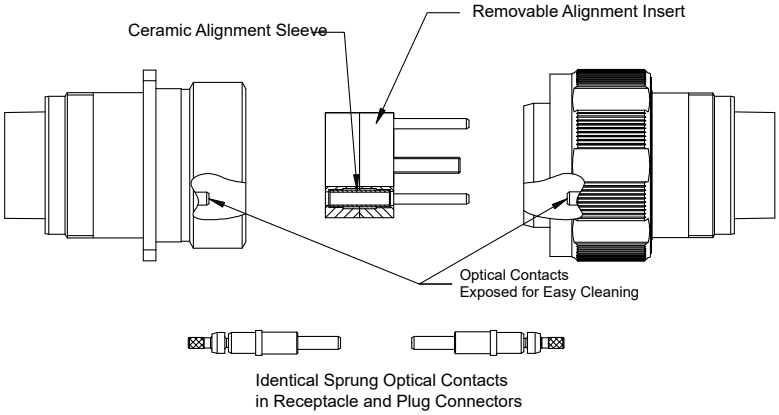


## Specifications

### FIBER TYPE

- **Channels:** 5, 8 and 12 optical channels
- **Cable Size:** 1.5 mm to 3.0 mm, outer jacket

### MATERIALS

- **Shell:** Aluminum, stainless steel, marine bronze
- **Finishes:** Nickel, olive drab cadmium, or black zinc nickel (aluminum shell)
- **Contact Body:** Arcap, Titanium
- **Ferrule:** Zirconia
- **Alignment Sleeve:** Zirconia
- **Alignment Pin:**
- **Seals:** Fluorosilicone or nitrile

### OPTICAL PERFORMANCE

- **Insertion Loss:** 0.25 dB typical*
- **Return Loss:** 40 dB typical*
- **Repeatability:** 0.1 dB with 50/125-µm fiber

*Fiber and polishing process dependent.

### ENVIRONMENTAL

- **Temperature Range:** -65°C to +155°C
- **Fluid Resistance:** Fluid immersion per EIA 364.10, including resistance to
  MIL-PRF-5606: Hydraulic fluid
  MIL-DTL-83133: JP-8 aviation fuel
  MIL-PRF-7808: Lubricating oil
  MIL-PRF-23699: Lubricating oil
  MIL-A-8243: Deicing/defrosting fluid
  MIL-C-25769: Aircraft cleaning compound
  MIL-PRF-87937: Aircraft cleaning compound
  MIL-G-3056: Gasoline
- **Salt Spray:** 48 hours (Nickel finish)
  500 hours (Cadmium finish)
- **Thermal Cycling:** -65° to 150°C

# DEUTSCH MC3 MkII Fiber Optic Connectors

## MIL-DTL-38999 Series III Style Connectors

### MECHANICAL

- **Sine Vibration:** 5 to 3000 Hz, 30 g
- **Bump:** 4000 bumps, 40 g
- **Random Vibration:** Up to 41.7 g for 16 hr. at 175° C
  Up to 50 g for 16 hr. at ambient temperature
- **Shock:** 300 g, 3 ms in the 3 axes
- **Durability:** 500 mating cycles
- **Thermal Shock:** 10 cycles, 4°C max. to 90°C min.

### Square Flange Receptacle

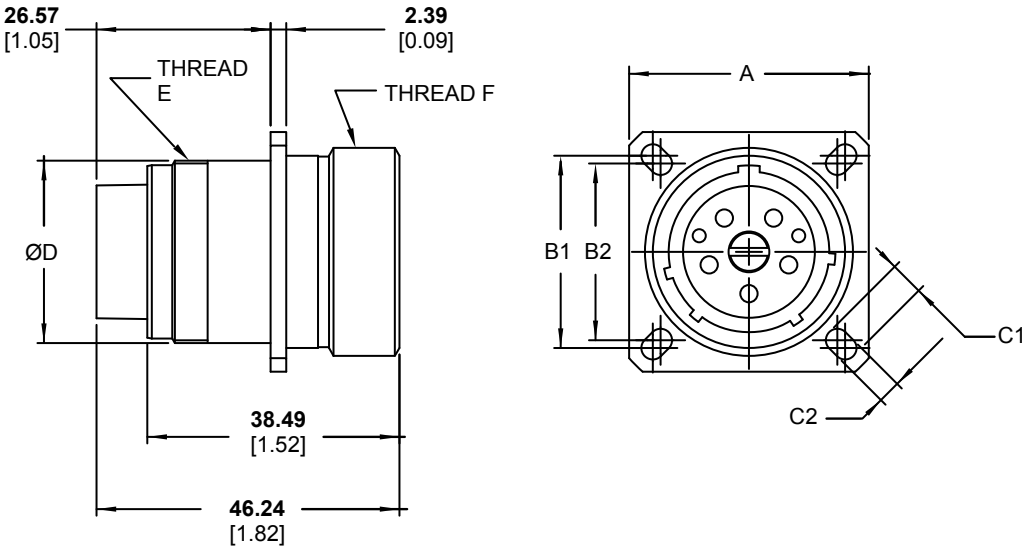


| Size/ Arrangement | A | B1 | B2 | C1 | C2 | D | Thread E | Thread F |
|---|---|---|---|---|---|---|---|---|
| **19-5** | **36.58**<br>1.440 | **29.35**<br>1.156 | **26.98**<br>1.062 | **5.00**<br>0.197 | **3.50**<br>0.138 | **27.84**<br>1.096 | M28 x 1.0 | **31.75**<br>1.250 |
| **23-8** | 42.98<br>1.692 | **34.92**<br>1.375 | **31.75**<br>1.250 | **6.23**<br>0.245 | **4.00**<br>0.157 | **33.84**<br>1.332 | M34 x 1.0 | **38.11**<br>1.500 |
| **25-12** | 46.02<br>1.812 | **38.11**<br>1.500 | **34.92**<br>1.375 | **6.23**<br>0.245 | **4.00**<br>0.157 | **36.84**<br>1.450 | M37 x 1.0 | **41.28**<br>1.625 |

**Millimeters** Inches

### Plug

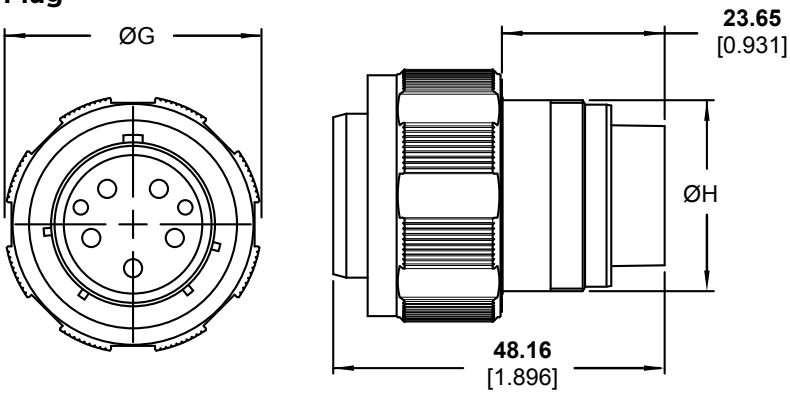


| Size/ Arrangement | ØG |
|---|---|
| **19-5** | **37.92**<br>1.493 |
| **23-8** | **44.12**<br>1.737 |
| **25-12** | **47.35**<br>1.864 |

**Millimeters** Inches

# DEUTSCH MC3 MkII Fiber Optic Connectors

## MIL-DTL-38999 Series III Style Connectors

### Dummy Receptacle

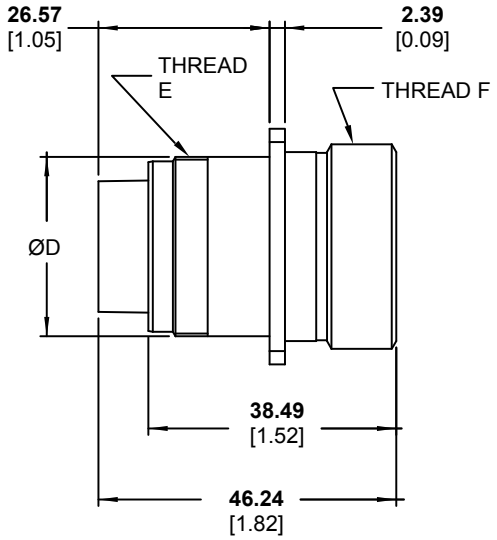


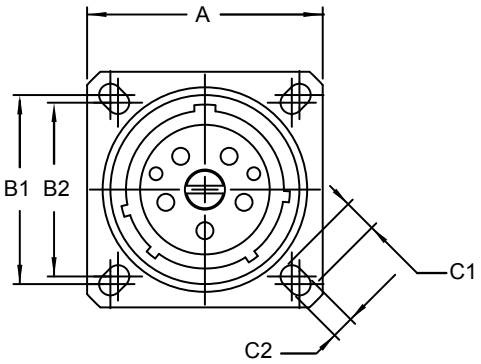


| Size/ Arrangement | A | B1 | B2 | C1 | C2 |
|---|---|---|---|---|---|
| 19-5 | **36.58**<br>1.440 | **29.35**<br>1.156 | **26.98**<br>1.062 | **5.00**<br>0.197 | **3.50**<br>0.138 |
| 23-8 | **42.98**<br>1.692 | **34.92**<br>1.375 | **31.75**<br>1.250 | **6.23**<br>0.245 | **4.00**<br>0.157 |
| 25-12 | **46.02**<br>1.812 | **38.11**<br>1.500 | **34.92**<br>1.375 | **6.23**<br>0.245 | **4.00**<br>0.157 |

**Millimeters** Inches

### Procaps

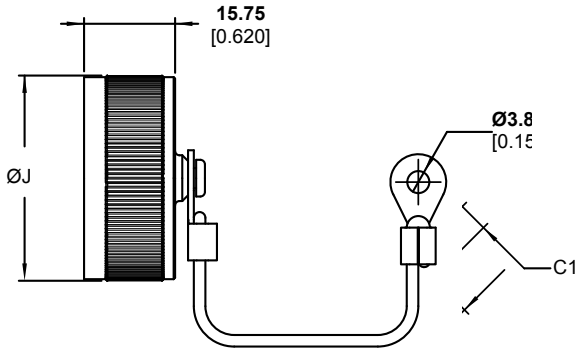


**Plug Cap**

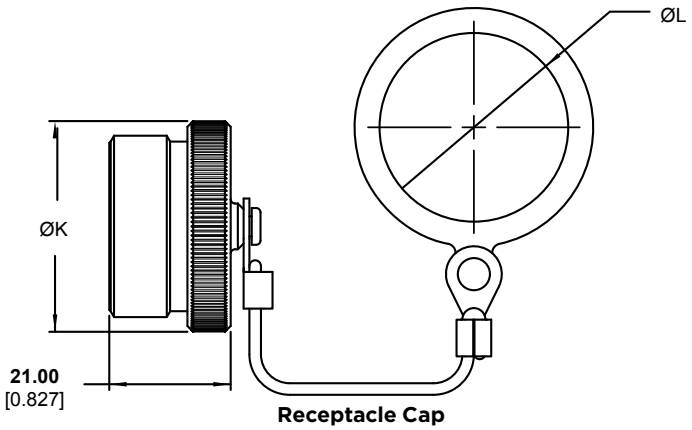


**Receptacle Cap**

| Size/ Arrangement | ØH | ØJ | ØK | ØL |
|---|---|---|---|---|
| 19-5 | **27.7**<br>1.091 | **35.4**<br>1.394 | **36.92**<br>1.454 | **29.46**<br>1.160 |
| 23-8 | **33.7**<br>1.327 | **41.75**<br>1.664 | **43.12**<br>1.698 | **35.81**<br>1.410 |
| 25-12 | **36.7**<br>1.445 | **44.93**<br>1.769 | **46.35**<br>1.825 | **38.99**<br>1.535 |

**Millimeters** Inches

# DEUTSCH MC3 MkII Fiber Optic Connectors

## MIL-DTL-38999 Series III Style Connectors

### Ordering Information

**MC3 00 E 2-N - 19-5 S N - F*****

**PRODUCT FAMILY**

**STYLE**
- **00** Bulkhead Receptacle
- **06** Plug
- **07** Jam Nut Receptacle
- **20** Protective Cap, Plug
- **30** Dummy Receptacle
- **40** Protective Cap, Receptacle

**SHELL FINISH**
- **N** Nickel Plated
- **C** Cadmium Plated Olive Drab

**INSERT (SHELL SIZE, NUMBER OF FIBERS)**
- **19-5, 23-8, 25-12**

**INSERT TYPE**
- **P** "Pin"—No Alignment Insert
- **S** "Socket"—With Removable Alignment Insert

**SHELL POLARIZATION**
- **N** Normal
- **B, C, E, F**
- **U** Universal

**MODIFICATION CODE**

# DEUTSCH MC3 MkII Fiber Optic Connectors

## MIL-DTL-38999 Series III Style Connectors

### Optical Termini (ordered separately)

Optical termini are supplied with a profile-formed optical end face and are available for single-mode or multimode fibers. Contacts are available in either sprung or rigid versions, depending upon application (rigid contacts should be used in bulkhead receptacles only).

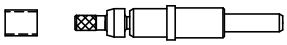

**Spring-Loaded Type**
**455500**

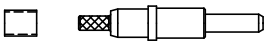

**Rigid Type**
**455494**
(Optional for bulkhead receptacles only)

### Ordering Information

**455500 - 128 - 1-01**

**TYPE**

**455500** Spring-Loaded Termini
**455595** Rigid Termini (Bulkhead Receptacles Only)

**FIBER HOLE SIZE**

**126**
**127**
**128**
**145**
**162**
**176**
**232**
**283**
**1MM** Plastic optical fiber

**CABLE TYPE**

**Tight Buffered**
**1-00** 900 tight buffered

**Tight Jacketed**
**1-01** 2.5 mm OD
**1-02** 1.8 mm OD
**1-03** 3.0 mm OD
**1-04** 2.1 mm OD
**00** 2.2 mm OD (1MM Fiber Size Only)

## Crimp Sleeves and Crimp Dies

| Cable OD | Sleeve Part No. | Crimp Dies Part No. | A/F |
|---|---|---|---|
| 900 µm Tight Buffer | — | 455608 | **1.64/1.74** 0.065/0.069 |
| 2.5 | 455610-01 | 455608 | **3.10/3.12** 0.122 / 0.123 |
| 1.8 | 455610-02 | 455608 | **3.10/3.12** 0.122/0.123 |
| 2.0 | 455610-03 | 455608 | **3.56/3.48** 0.140/0.137 |
| 2.1 | 455610-04 | 455608 | **3.10/3.12** 0.122/0.123 |

**Millimeters** Inches

**SPACE SAVING**

- Two optical channels in a size 9 shell

**HIGH PERFORMANCE**

- Compact 2.5-mm precision zirconia ceramic ferrules
- Lightweight aluminum shells
- MIL-DTL-38999 Series III anti-vibration coupling mechanism and tri-start thread

**EASY TO USE**

- Simple termination process and tooling
- Purpose designed inserts, and insert-to-insert keying aid precision alignment
- Identical spring loaded optical contacts help maintain contact under severe shock and vibration

# DEUTSCH MC4 Duplex Connectors

## MIL-DTL-38999 Style Series III Connectors

The MC4 Duplex optical fiber connector is based upon shell size 9 Mil-C-38999 Series III making this an extremely compact environmentally sealed 2-way connector. The MC4 is suitable for use with most multimode fibers with core diameters of 50 to 200 µm. Simplex and duplex cable constructions can be accommodated with suitable connector backshells.

Precision ceramic ferrules and alignment sleeves help support optimum performance and reliability over the service life of the connector.

The optical termini are spring loaded in both the plug and receptacle shells. This helps provide an axial load equalization so that the contact can be maintained even when the connector is subjected to vibration levels in excess of 30 g.

The coupling nut has a built in antivibration clicker mechanism to help prevent inadvertent uncoupling under adverse vibration conditions.

# DEUTSCH MC4 Duplex Connectors

## MIL-DTL-38999 Style Series III Connectors

## Specifications

### OPTICAL

- **Attenuation:** Less than 0.4 dB (50/125 µm)
- **Repeatability:** Better than 0.2 dB
- **Fiber Types:** x/125, 100/140, 200/280 µm
- **Cable Types:**
  2.5 mm tight jacketed
  4.5 mm duplex
  For other cable sizes consult TE

### MATERIALS

- **Shell:** Aluminum alloy, nickel plated
- **Ferrule:** Zirconia
- **Alignment Sleeve:** Zirconia
- **Seals:** Fluorosilicone
- **Backshell:** Aluminum alloy, nickel plated

### MECHANICAL

- **Temperature Range:** -65°C to +155°C
  (Cable and epoxy dependent)
- **Durability:** 500 mating cycles

# DEUTSCH MC4 Duplex Connectors

## MIL-DTL-38999 Style Series III Connectors

### Part Numbering System

**MC4 00 E - C - 09-2 S N - ****

**STYLE**
- **00** Bulkhead Receptacle
- **06** Plug
- **07** Jam Nut

**SHELL FINISH**
- **N** Nickel Plated
- **C** Olive Drab Cadmium Plated

**SHELL SIZE—NO. OF CHANNELS**
- **09-2**

**INSERT TYPE**
- **P** Pin
- **S** Socket

**SHELL ORIENTATION**
- **N, A, B, C, D, E**

**MODIFICATION CODE**

### Jam Nut Receptacle

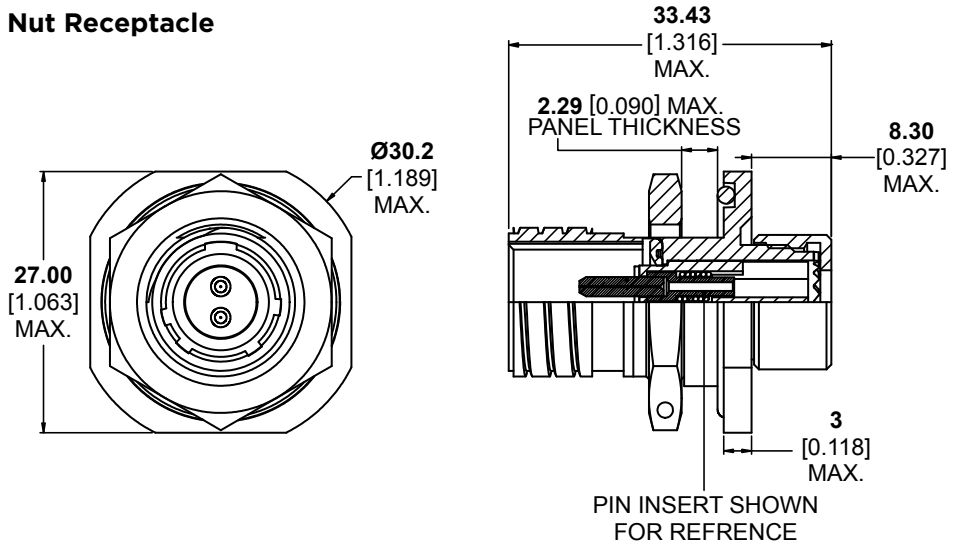

# DEUTSCH MC4 Duplex Connectors

## MIL-DTL-38999 Style Series III Connectors

### Square Flange Receptacle

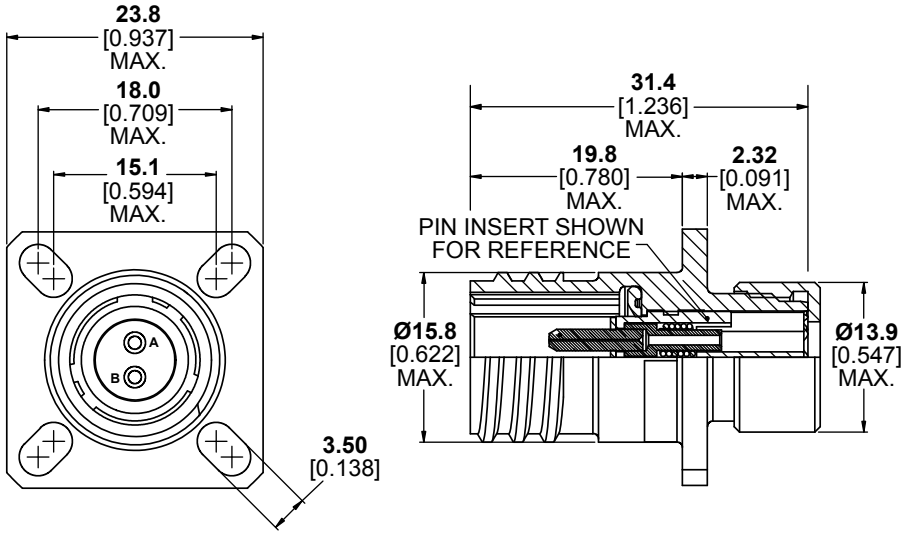


### Plug

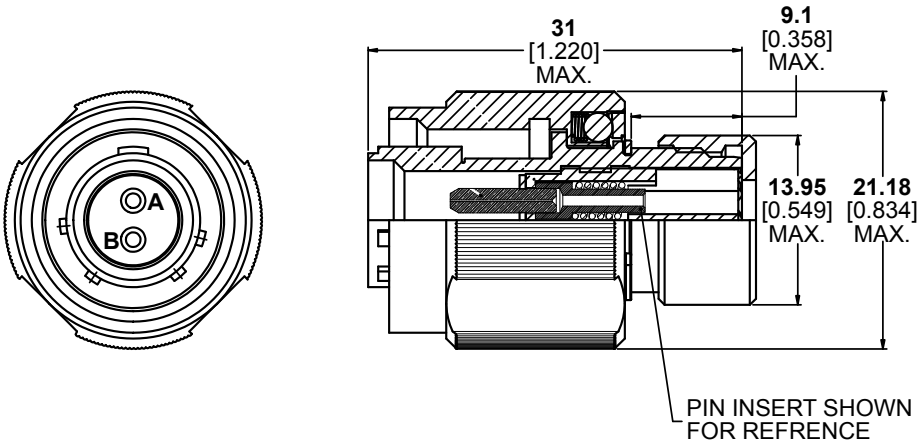

# DEUTSCH MC4 Duplex Connectors

## MIL-DTL-38999 Style Series III Connectors

### Protective Cap for Receptacle Connectors

**Part Numbering System**

**MC420E - N - 09**

**BASIC PART NUMBER**
- **MC440E** Pro Cap for Receptacle Connectors

**MATERIAL/FINISH**
- **S** Stainless Steel
- **N** Aluminum, Nickel Plated
- **C** Aluminum, Cadmium Plated

**SHELL SIZE**
- **09**

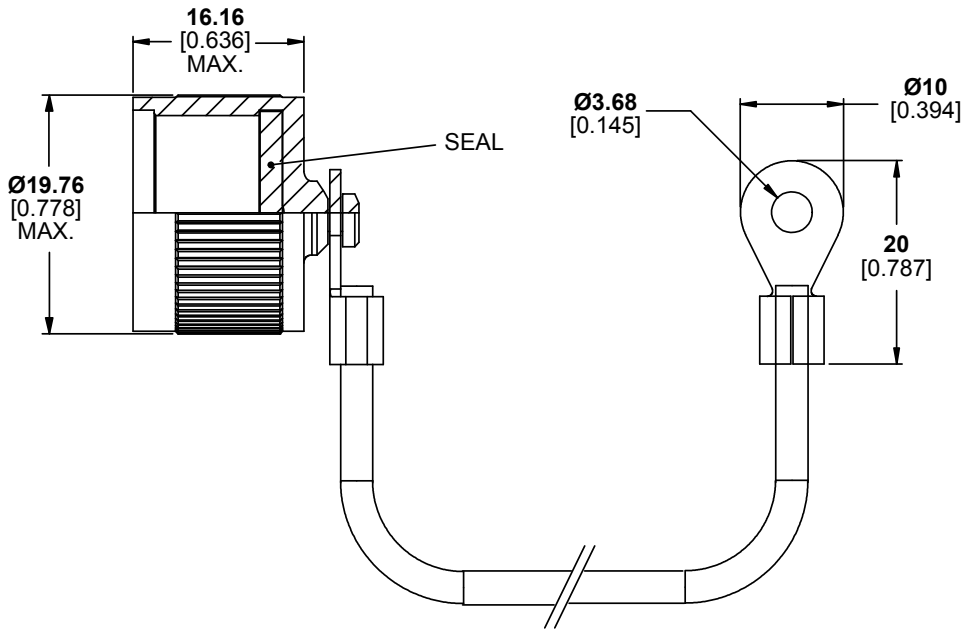

# DEUTSCH MC4 Duplex Connectors

## MIL-DTL-38999 Style Series III Connectors

### Protective Caps for Plug Connectors

**Part Numbering System**

**MC420E - N - 09 - N**

**BASIC PART NUMBER**
**MC420E** Pro Cap for Plug Connectors

**KEYING**
**N, A, B, C, D, E**

**SHELL SIZE**
**09**

**MATERIAL/FINISH**
**S** Stainless Steel
**N** Aluminum, Nickel Plated
**C** Aluminum, Cadmium Plated

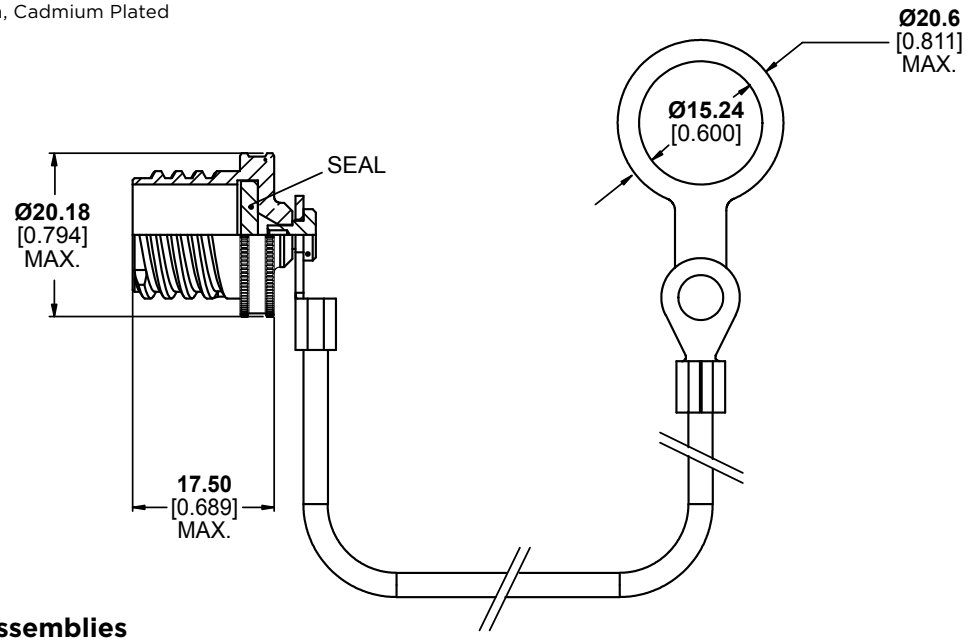


### Back End Assemblies

## HIGH PERFORMANCE

- Compact 1.25 mm precision zirconia ceramic ferrules
- Composite lightweight, high strength, corrosion resistant connector shells
- MIL-DTL-38999 Series III anti-vibration coupling mechanism and tri-start thread

## EASY TO USE

- Simple termination process and tooling
- Purpose designed inserts, and insert-to-insert keying aid precision alignment
- Identical spring loaded optical contacts help maintain contact under severe shock and vibration

## VERSATILE

- Extensive range: 1, 2, 4, 6, 8, 10, 18, 24 and 30 way connectors
- Choose from plug socket/ receptacle pin or plug pin/ receptacle socket configurations
- Easily removable alignment sleeve insert facilitates simple cleaning and maintenance

# DEUTSCH MC5 Connectors

### MIL-DTL-38999 Style Series III Connectors

The DEUTSCH MC5 high-density fiber optic multiway connector series from TE Connectivity (TE) is capable of sustained performance over a wide range of tough environmental conditions.

The MC5 connector uses precision ceramic ferrules and lightweight MIL-DTL-389999 Series III connector shell materials, combined with purpose-designed inserts to help ensure the optical performance meets the requirements of high reliability optical systems.

Compact spring-loaded precision optical contacts are individually insertable/removable for ease of assembly and maintenance, and the color band indicates full mating. The alignment sleeves provide highly reliable, repeatable optical performance.

The MC5 Series connectors provide excellent performance under some of the most demanding environmental conditions, including military aircraft.

# DEUTSCH MC5 Connectors

## MIL-DTL-38999 Style Series III Connectors

## Specifications

### FIBER TYPE

- **Channels:** 2, 4, 6, 8, 10, 18, 24, and 30 channels
- **Cable Size:** 1.8 mm, 2.1 mm and 2.5 mm jacket

### MATERIALS

- **Shell:** Composite
- **Contact Body:** Arcap
- **Ferrules:** Zirconia
- **Alignment Sleeves:** Zirconia
- **Seals:** Fluorosilicone
- **Plating:** Nickel

### OPTICAL PERFORMANCE

- **Insertion Loss:** 0.25 dB typical
- **Return Loss:** -40 dB typical
- **Repeatability:** 0.1 dB (with 50/125 µm fiber)

### TEMPERATURE

- **High Temperature Endurance:** +150°C, 760 hours
- **Low Temperature Endurance:** -65°C, 500 hours

### MECHANICAL

- **Sine Vibration:** 5-3000 Hz, 40 g, 10 hours
- **Random Vibration:** 25-2000 Hz, 5 g2/Hz (50 Grms), 16 hours

# DEUTSCH MC5 Connectors

## MIL-DTL-38999 Style Series III Connectors

### Ordering Information

**MC5 06E - N - 11-2 P N - F*****

**SERIES**
**MC5**

**STYLE**
**00** Bulkhead Receptacle
**06** Plug
**07** Jam Nut
**20** Protective Cap Plug
**30** Dummy Receptacle
**40** Protective Receptacle

**FINISH**
**N** Nickel Plated

**SHELL SIZE**
**11-2, 13-4, 15-6, 17-8, 19-10, 21-18, 23-24, 25-30**

**INSERT TYPE**
**P** (without removable alignment insert)
**S** (with removable alignment insert)

**SHELL ORIENTATION**
**N, A, B, C**

**MODIFICATION CODE**

**Plug**
MC506E

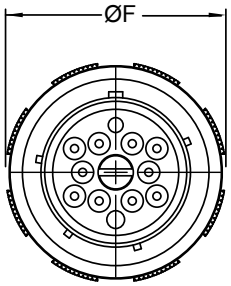


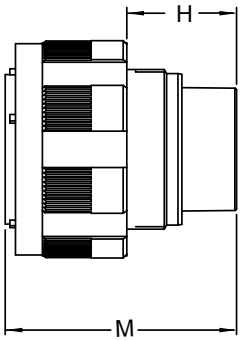


### Dimensional Information

| Size/ Arrangement | ØF Max. | H Max. | M Max. |
|---|---|---|---|
| **11-2** | **24.94** 0.982 | **19.9** 0.783 | **40.86** 1.609 |
| **13-4** | **29.34** 1.155 | **19.9** 0.783 | **40.86** 1.609 |
| **15-6** | **32.46** 1.278 | **19.9** 0.783 | **40.86** 1.609 |
| **17-8** | **35.66** 1.404 | **19.9** 0.783 | **40.86** 1.609 |
| **19-10** | **38.46** 1.514 | **19.7** 0.776 | **40.86** 1.609 |
| **21-18** | **41.66** 1.640 | **19.7** 0.776 | **40.86** 1.609 |
| **23-24** | **44.86** 1.766 | **19.7** 0.776 | **40.86** 1.609 |
| **25-30** | **47.98** 1.889 | **19.7** 0.776 | **40.86** 1.609 |

**Millimeters** Inches

# DEUTSCH MC5 Connectors

## MIL-DTL-38999 Style Series III Connectors

### Receptacle
MC500E

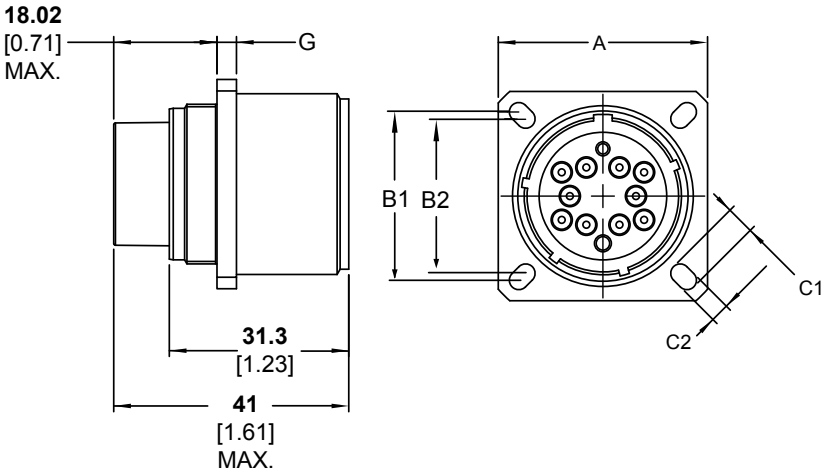


### Dummy Receptacle
MC530E

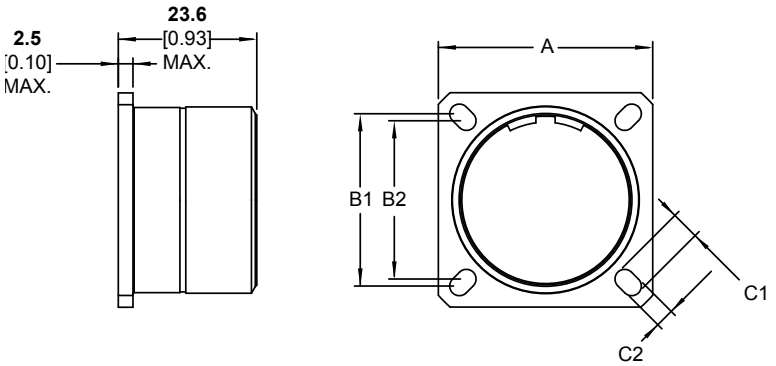


| Size/ Arrangement | A Max. | B1 | B2 | C1 Min. | C2 Min. | G Max. |
|---|---|---|---|---|---|---|
| 11-2 | **26.4**<br>1.039 | **20.62**<br>0.812 | **18.26**<br>0.719 | **4.84**<br>0.191 | **3.16**<br>0.124 | **3.52**<br>0.139 |
| 13-4 | **28.81**<br>1.134 | **23.01**<br>0.906 | **20.62**<br>0.812 | **4.84**<br>0.191 | **3.16**<br>0.124 | **3.52**<br>0.139 |
| 15-6 | **31.2**<br>1.228 | **24.61**<br>0.969 | **23.01**<br>0.906 | **4.31**<br>0.170 | **3.16**<br>0.124 | **3.52**<br>0.139 |
| 17-8 | **33.51**<br>1.319 | **26.97**<br>1.062 | **24.61**<br>0.969 | **4.84**<br>0.191 | **3.16**<br>0.124 | **3.52**<br>0.139 |
| 19-10 | **36.71**<br>1.445 | **29.36**<br>1.156 | **26.97**<br>1.062 | **4.84**<br>0.191 | **3.16**<br>0.124 | **3.52**<br>0.139 |
| 21-18 | **39.91**<br>1.571 | **31.75**<br>1.250 | **29.36**<br>1.156 | **4.84**<br>0.191 | **3.16**<br>0.124 | **4.33**<br>0.170 |
| 23-24 | **43.11**<br>1.697 | **34.93**<br>1.375 | **31.75**<br>1.250 | **6.06**<br>0.239 | **3.83**<br>0.151 | **4.33**<br>0.170 |
| 25-30 | **46.21**<br>1.819 | **38.1**<br>1.500 | **34.93**<br>1.375 | **6.06**<br>0.239 | **3.83**<br>0.151 | **4.33**<br>0.170 |

**Millimeters** Inches

# DEUTSCH MC5 Connectors

## MIL-DTL-38999 Style Series III Connectors

**Procap**
MC520E

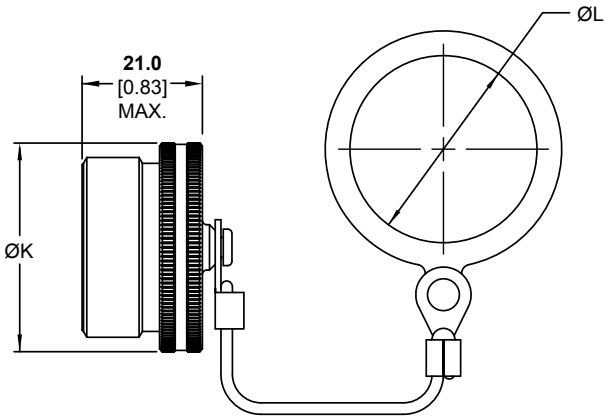


**Procap**
MC540E

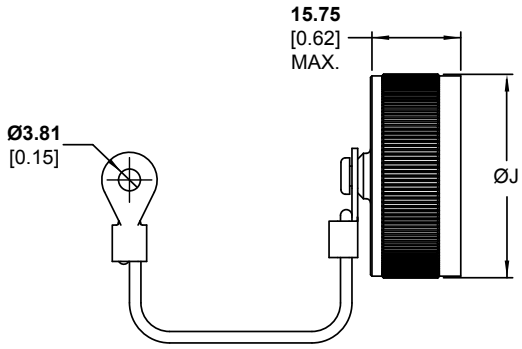


| Size/ Arrangement | ØJ Max. | ØK Max. | ØL Min. |
|---|---|---|---|
| **11-2** | **22.96**<br>0.094 | **24.00**<br>0.945 | **16.51**<br>0.650 |
| **13-4** | **26.06**<br>1.206 | **27.56**<br>1.085 | **19.56**<br>0.770 |
| **15-6** | **29.26**<br>1.152 | **31.10**<br>1.224 | **22.86**<br>0.900 |
| **17-8** | **34.16**<br>1.345 | **35.46**<br>1.396 | **26.04**<br>1.025 |
| **19-10** | **35.66**<br>1.404 | **37.16**<br>1.463 | **29.21**<br>1.150 |
| **21-18** | **38.75**<br>1.526 | **40.10**<br>1.579 | **32.39**<br>1.275 |
| **23-24** | **42.06**<br>1.656 | **43.36**<br>1.707 | **35.56**<br>1.400 |
| **25-30** | **44.96**<br>1.770 | **46.6**<br>1.835 | **38.74**<br>1.525 |

**Millimeters** Inches

# DEUTSCH MC5 Connectors

## MIL-DTL-38999 Style Series III Connectors

### MC5 Optical Termini (ordered separately)

Optical termini are supplied with a profile formed optical end face and are available for single-mode or multimode fibers. Contacts are available in either spring-loaded or rigid versions, depending upon application. Rigid contacts should be used in bulkhead receptacles only.

Note: A crimp sleeve is not included for terminating 900-µm buffered cable.

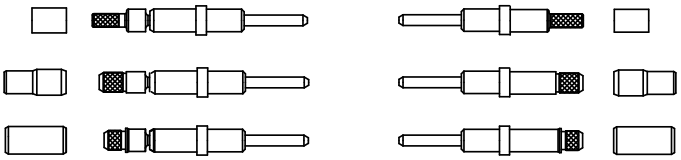

**Spring Loaded** **Rigid**

### Ordering Information

**455335 - 126 1-01**

**TERMINUS TYPE**
- **455335** Spring Loaded
- **455360** Rigid

**FERRULE FIBER HOLE SIZE (µM)**
- **125**
- **126**
- **127**
- **128**
- **144**
- **159**
- **172**
- **175**

**CABLE JACKET DIAMETER**
- **1-00** 900 µm Buffer
- **1-01** 2.1 mm Dia.
- **1-02** 1.8 mm Dia.
- **1-03** 2.5 mm Dia.

### Tooling

- **Crimp Tool:** Part No. 471716
- **Crimping Dies:** 457440

### MC5 Backshells for Multifiber Cables (ordered separately)

A variety of backshells are available for multifiber cables, with peripheral strain relief (for 900-µm buffered cable) and central strain relief. Consult TE.

## EASY TO USE

- Insert-to-insert keying aids in precision alignment
- Individually rear insertable and removable optical contacts
- Color band indicates full mating
- Easily accessible APC and PC end faces for cleaning and maintenance

## VERSATILE

- Interchangeable with MIL-DTL-38999 Series III
- Backshells and adapters available for most single and multifiber cable types
- Insert accommodates 2 to 72 channels, and can be supplied pre-terminated
- Standard MT interface and multiple housing options help make integration into new and existing systems easy

## RUGGED

- Lightweight, corrosion-resistant metal-plated composite shell
- Strong, durable and environmentally sealed
- Anti-vibration coupling with tri-start thread

# DEUTSCH MC6 Fiber Optic Ribbon Cable Connectors

### 38999 Series III-Style Connectors

The DEUTSCH MC6 high-density fiber optic connector series is rugged, versatile, and easy to install and maintain. The connectors are compatible with standard MT ferrule inserts.

The MT ferrule inserts accommodate 2 to 72 channels and can be supplied pre-terminated, if required. The MC6 connector uses the compact MIL-DTL-38999 Series III, shell size 11 body, which is also used on the DEUTSCH MC5 connector.

MC6 connectors have a lightweight, corrosion resistant, metal-plated composite shell, which helps provide high strength and durability combined with excellent EMC shielding. MC6 connector shell are also available in aluminum and Marine Bronze materials

The result is a very compact, rugged, environmentally sealed solution for a wide range of applications, such as avionics, data bus and in-flight entertainment systems.

# DEUTSCH MC6 Fiber Optic Ribbon Cable Connectors

## 38999 Series III-Style Connectors

## Specifications

### MATERIALS

- **Shell:** Aluminum, composite or Marine Bronze
- **Contact Body:** Nickel/cadmium plated composite polymer
- **Ferrule:** Thermoplastic
- **Alignment Pin:** Stainless steel
- **Seals:** Fluorinated silicone elastomer
- **Plating:** Nickel (Back zinc nickel available for aluminum shells)

### OPTICAL

- **Insertion Loss:** 0.25 dB typ. (fiber dependent)
- **Return Loss:** -40 dB typ.
- **Repeatability:** 0.2 dB typ.

### ENVIRONMENTAL/MECHANICAL

- **Temperature Range:** -55°C to +150°C
- **Vibration:** 20 to 2000 Hz, 20 g
- **Durability:** 500 mating cycles

### FIBER TYPE

- **Channels:** 2 to 72
- **Cable Type:** Telecom grade cable
  Aerospace grade cable

## Thread Sizes

| Shell Size | Accessory Thread (6g .100R) | Mating Thread (0.1P-0.3L) | Jam Nut Thread (6g .100R) |
|---|---|---|---|
| 11 | M15 x 1.0 | .7500 | M20 x 1.0 |

# DEUTSCH MC6 Fiber Optic Ribbon Cable Connectors

## 38999 Series III-Style Connectors

### Connector Part Numbering

**MC6 06 E - N - 11 - 01 N - F****

**SERIES**
**MC6**

**STYLE**
**00** Bulkhead Receptacle
**06** Plug
**07** Jam Nut Receptacle

**FINISH**
**N** Nickel Plated
**C** Cadmium Plated

**SHELL SIZE**
**11**

**NUMBER OF MT FERRULES**
**01**

**KEYING**
**N** Normal
**A, B, C**

**MODIFICATION CODE**
Consult TE

### MT Ferrule Part Numbering

**MC6 - 12 SM - 01 - P**

**TYPE**
**MC6**

**NO. CHANNELS**
**12, 24**

**FERRULE TYPE**
**SM** Single Mode
**MM** Multimode

**CABLE TYPE**
**01** Ruggedized Aerospace Oval Multifiber Cable, 3.95 x 1.60 mm (0.156 x 0.063") Max.
**02** Round Multifiber Cable 3.96 mm Dia. (0.156") Max.

**FERRULE GENDER**
**P** Pin (With Alignment Pins)
**S** Socket (No Alignment Pins)

# DEUTSCH MC6 Fiber Optic Ribbon Cable Connectors

## 38999 Series III-Style Connectors

### Square Flange Receptacle

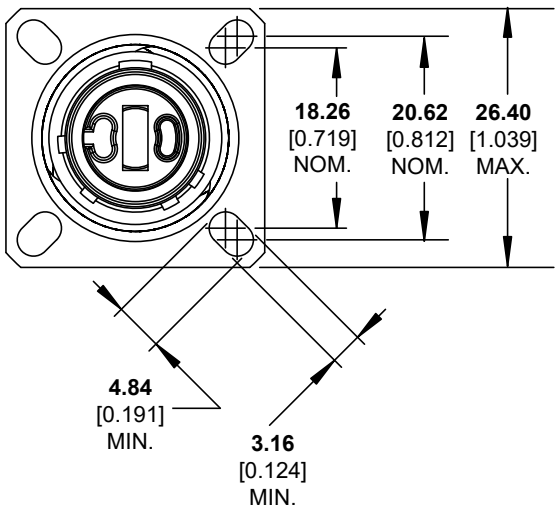


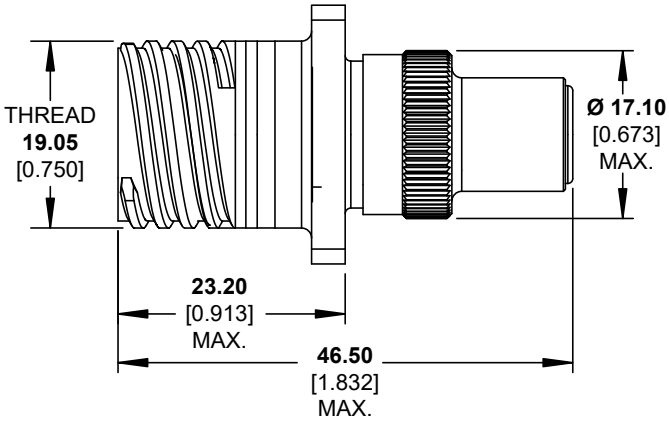


### Jam Nut Receptacle

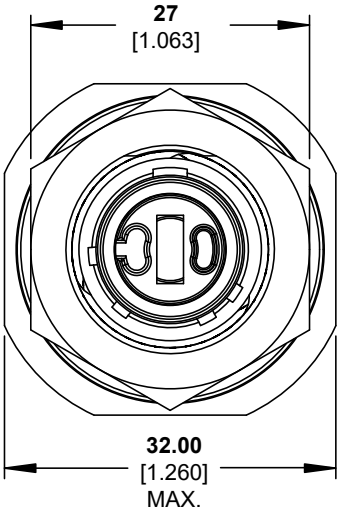


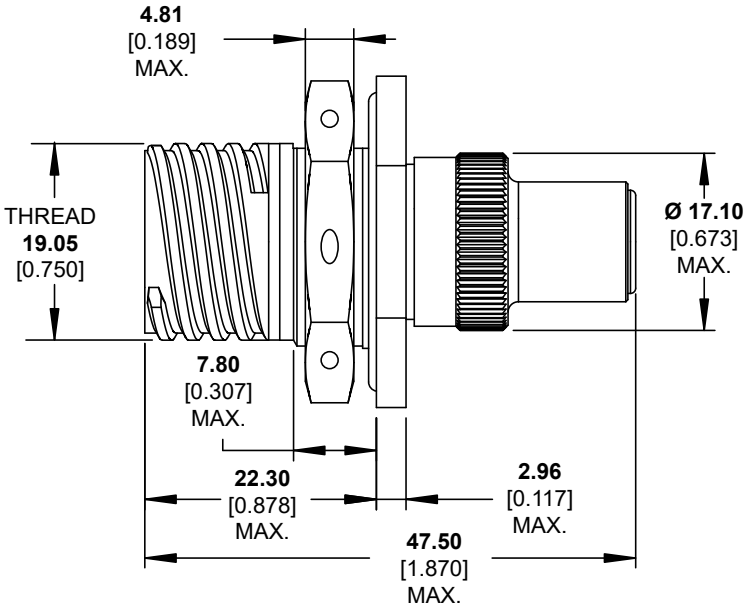

# DEUTSCH MC6 Fiber Optic Ribbon Cable Connectors

## 38999 Series III-Style Connectors

### Plug

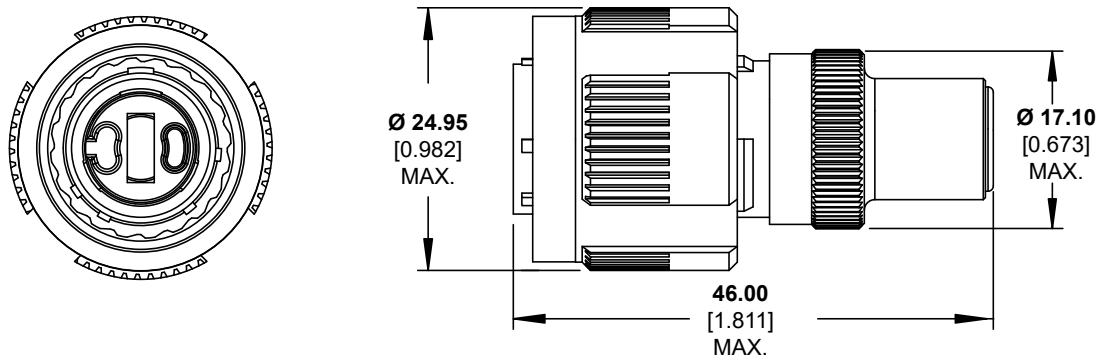


### Dummy Receptacle

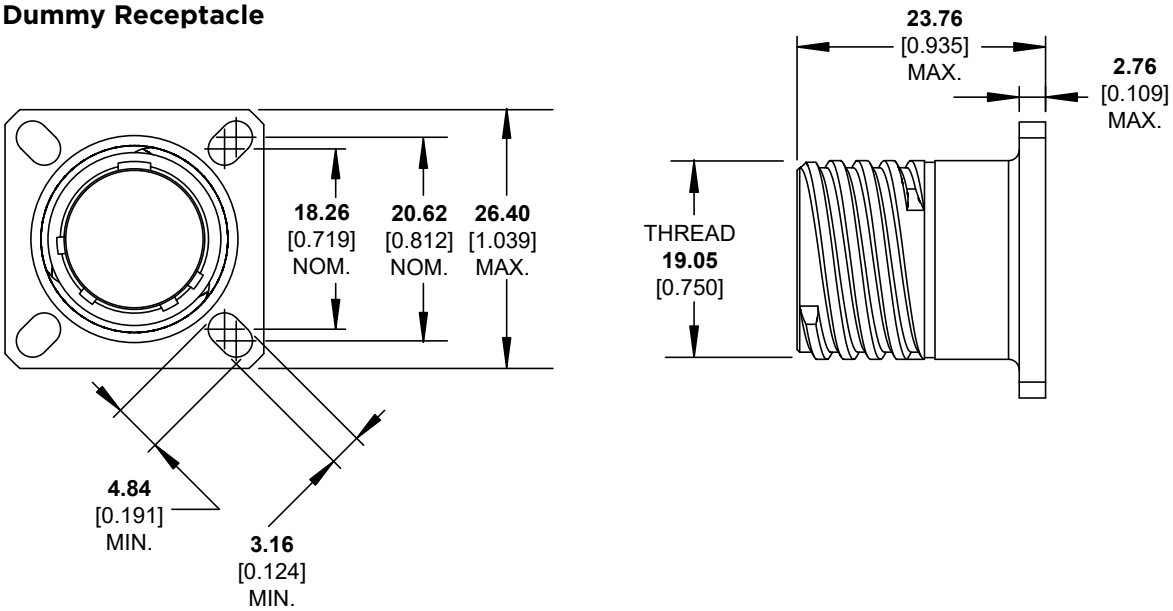

# DEUTSCH MC6 Fiber Optic Ribbon Cable Connectors

## 38999 Series III-Style Connectors

### Protective Caps for Receptacles

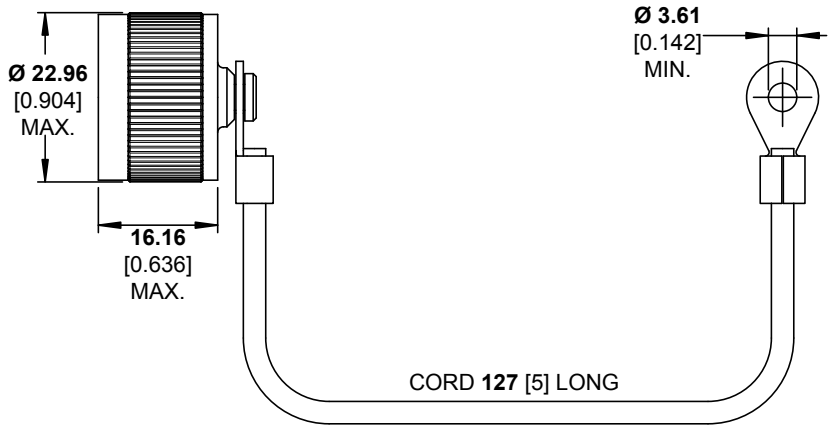


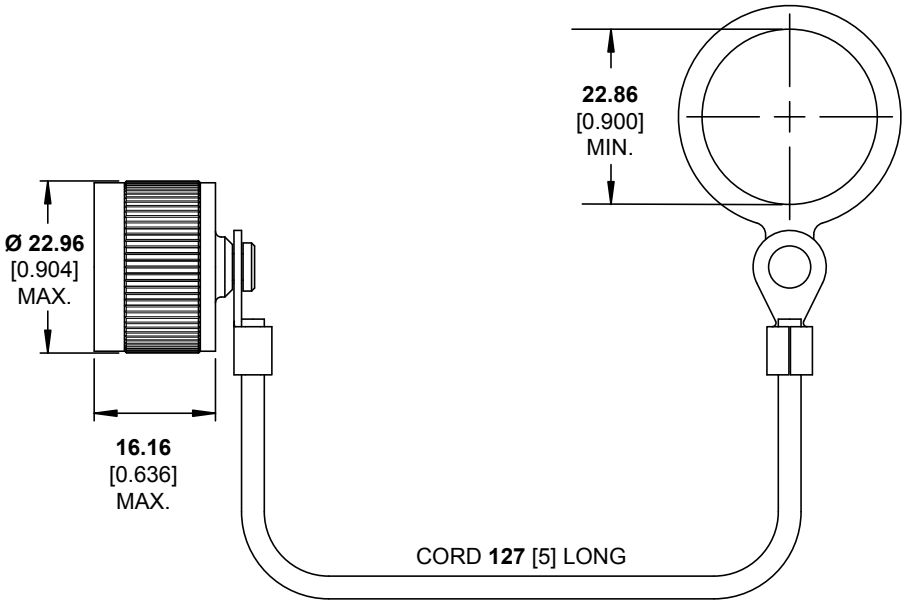

# DEUTSCH MC6 Fiber Optic Ribbon Cable Connectors

## 38999 Series III-Style Connectors

### Protective Caps for Plugs

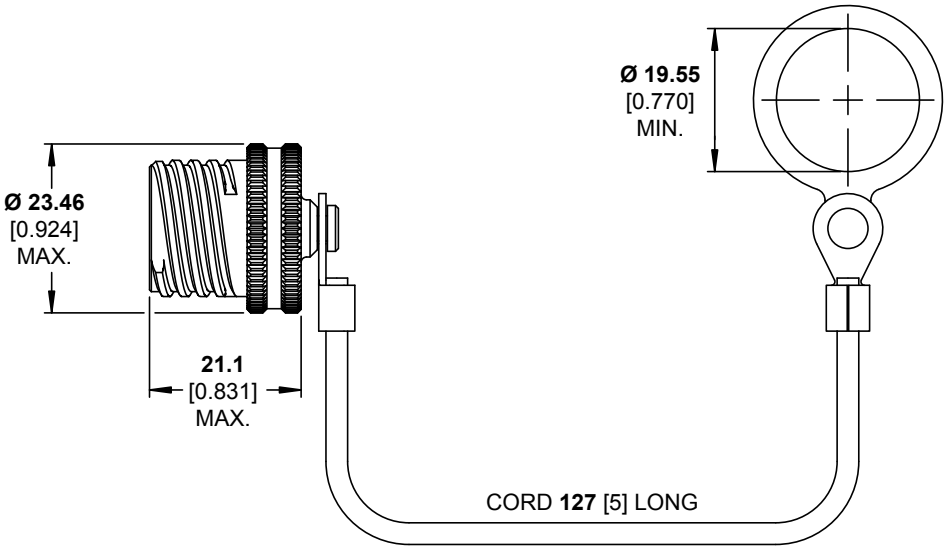

### HIGH CAPACITY

- Holds four 12 or 24-fiber MT ferrules
- Up to 96 optical channels per connector
- Size 21 shell

### EASY TO ASSEMBLE

- No special tools or fixtures required
- Only one part to assemble: the ferrule retainer to secure the ferrule
- Screwdriver is only tool required

### HIGH PERFORMANCE

- Precision alignment for excellent optical performance
- Vibration resistant

### COMPATIBLE

- Uses standard 38999 backshells

## AviMT Connector

### D38999 Series IIII Style Connector with Four MT Ferrules

The AviMT connector from TE Connectivity (TE) holds four MT ferrules—for up to 96 fibers—in a compact size 21 shell. The connector is well suited to applications requiring high fiber counts, such as UAV-based video surveillance, C5ISR, avionics, fiber backbone, radar and IFE systems.

### Fast, Simple Assembly

The connector is very easily assembled, requiring only a screwdriver to fasten the ferrule retainer into place. The simple assembly contrasts dramatically with many connectors in the industry, which require special tools and fixtures to assemble multiple parts and subassemblies.

## Specifications

### MATERIALS

- **Shell:** Nickel-plated aluminum (Consult TE for other shell finishes)
- **Insert:** Thermoplastic
- **Front Retainer Ring:** Passivated stainless steel
- **Interfacial Seal:** Rubber
- **Ferrule Retainer:** Passivated stainless steel

### OPTICAL (Tested with OM3 multimode fiber)

- **Insertion Loss (Avg.)**
  12-Fiber Ferrule: 0.12 dB
  24 Fiber Ferrule: 0.17 dB
- **Return Loss (Avg.)**
  12-Fiber Ferrule: 29.3 dB
  24 Fiber Ferrule: 29.8 dB

### ENVIRONMENTAL/MECHANICAL

- **Low Temp Storage:** -50°C for 96 hours
- **High Temp Storage:** +85°C for 96 hours
- **Humidity Exposure:** Cycled to +55°C, 95% RH
- **Thermal Cycling:** -40°C to 70°C
- **Sine Sweep Vibration:** 10 Hz to 2000 Hz, 15 g peak
- **Random Vibration:** 16.91 grms
- **Mechanical Shock:** 50g

### APPLICATIONS

- C5ISR
- Avionics
- Military aerospace
- Commercial aerospace ground radar
- Fiber backbone
- IFE systems

# AviMT Connector

## D38999 Series IIII Style Connector with Four MT Ferrules

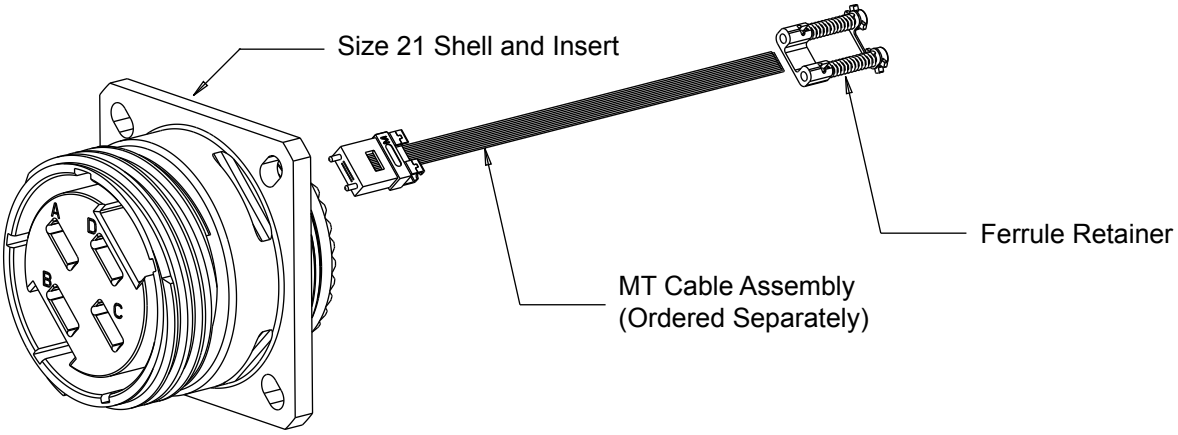


## Ordering Information

| Style | Part No. |
|---|---|
| Plug | 2828342-1 |
| Square Flange Receptacle | 2828343-1 |
| Jam Nut Receptacle | 2320289-1 |

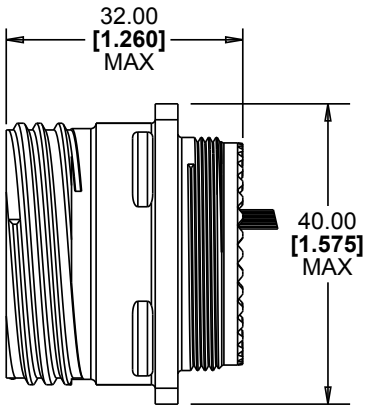


**Square Flange Receptacle**

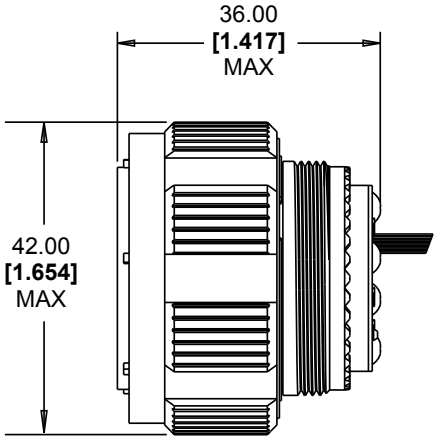


**Plug**

**RUGGED**

- Noncontacting fiber interface
- Minimal wear on fiber optic interface
- Vibration resistant

**EASY TO USE**

- Easy to handle
- Easy to clean
- Highly resistant to dirt/debris

**CONSISTENT**

- Repeatable low-loss performance in harsh environments
- Low sensitivity to thermal fluctuations and interface contamination
- Consistent overall optical link budget

**VERSATILE**

- Single mode or multimode
- Common 850/1300 dual, 1310, or 1550 nm wavelengths
- 2 or 4 optical channels in a size 15 shell
- 8 channels in a size 15 shell

## 38999-Style Connectors

Expanded beam inserts for 38999-style connectors use the same reliable insert technology as our PRO BEAM connectors. Available to accommodate 2 or 4 optical channels in a size 11 shell or 8 channels in a size 15 shell, the inserts give you many of the advantages of expanded beam interfaces in the familiar 38999 form factor.

Connector kits are available to accommodate popular fiber optic cable styles used in the military and aerospace industry—including tactical cable, 1.8 and 2.2-mm avionics cable, and buffered-only cable.

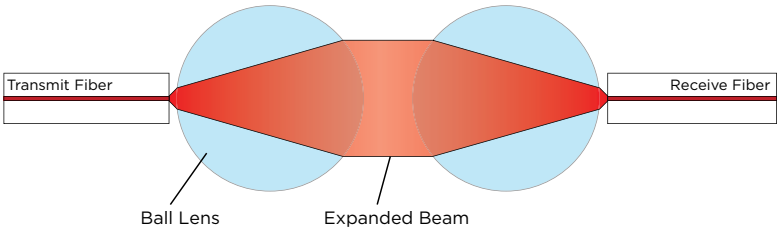


Expanded beam technology, which physically expands and collimates the transmission signal into an optical beam over 14 times its original diameter for multimode fiber and over 45 times for single-mode fiber. The beam is then refocused back down onto the core of the receiving fiber. This approach provides ease of alignment and low sensitivity to thermal changes and contamination.

# 38999-Style Connectors with Expanded Beam Inserts

## Standard Styles

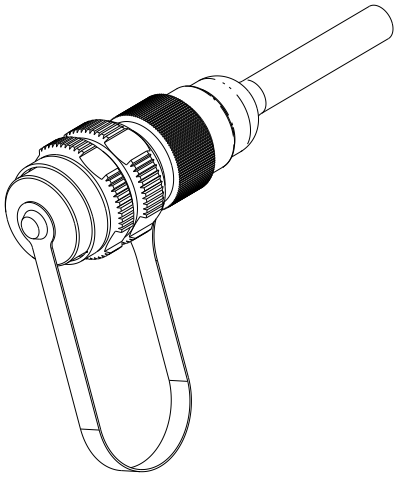

**Plug Connector**

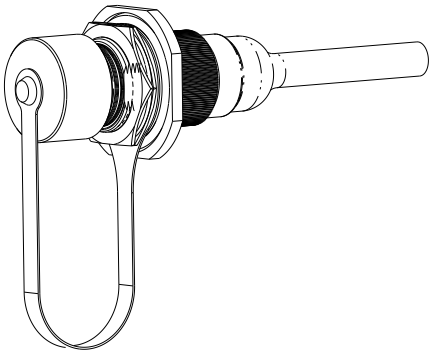

**Jam Nut Receptacle Connector**

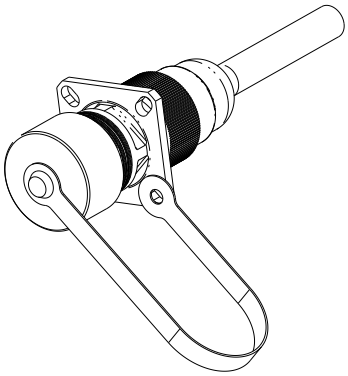

**Square Flange Receptacle**

## Insert Kits

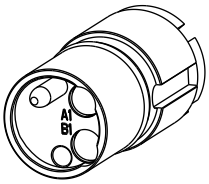


**2-Channel Mini Insert**
(Size 11 Shell)

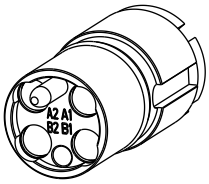


**4 Channel Mini Insert**
(Size 11 Shell)

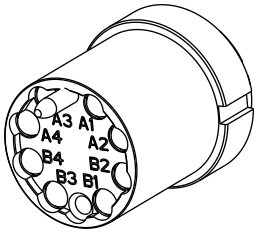


**8-Channel Sr. Insert**
(Size 15 Shell)

| EB Insert Type | No. of Fibers | Part No. | | |
|---|---|---|---|---|
| | | Multimode 850/1300 nm | Single Mode 1310 nm | Single Mode 1550 nm |
| Mini | 2 | 1374759-4 | 1588129-2 | 1588128-2 |
| | 4 | 1374759-2 | 1588129-3 | 1588128-3 |
| Sr. | 8 | 1516256-1 | 1516258-1 | 1516258-2 |

# 38999-Style Connectors with Expanded Beam Inserts

## Shell Kits

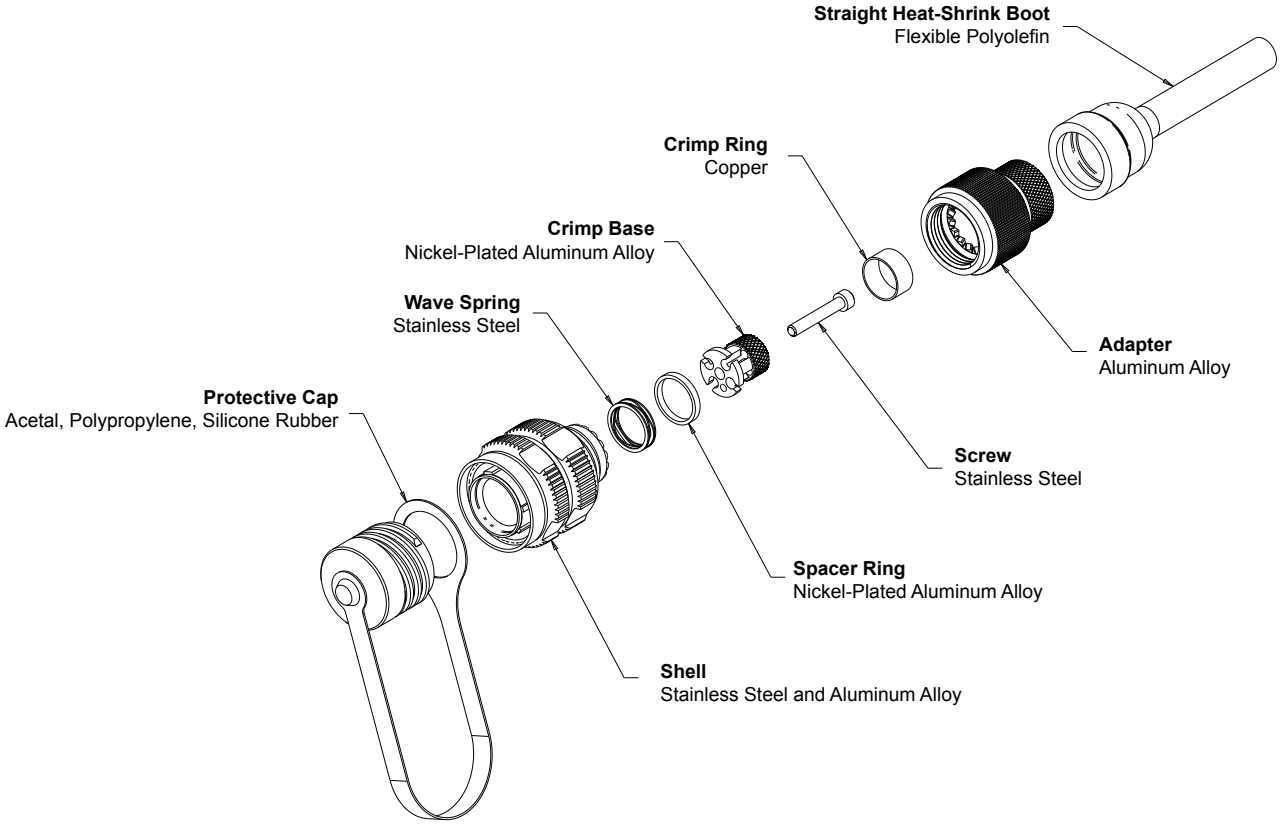


**Typical Configuration and Materials**
(Plug Connector Shown)

# 38999-Style Connectors with Expanded Beam Inserts

## Ferrule Kits

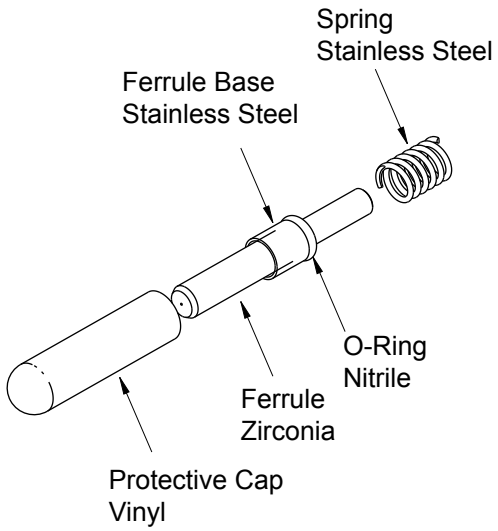


| Fiber Hole Size (µm) | Fiber Type | Part No. | |
|---|---|---|---|
| | | Mini | Sr. |
| 125 | Single Mode | 1754700-1 | 1985635-1 |
| 126 | Single Mode | 1754700-2 | 1985635-2 |
| | Multimode | 1754699-1 | 1985107-1 |

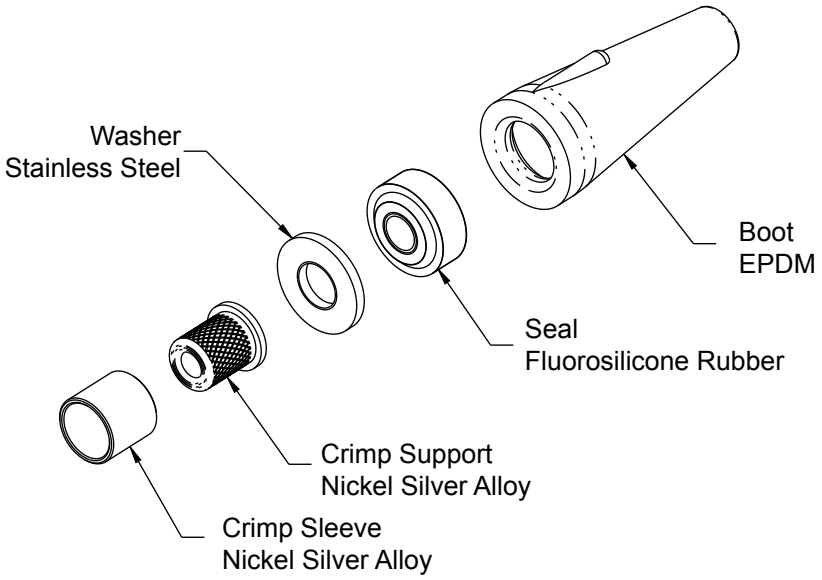


| Cable Dia. | Part No. |
|---|---|
| 5.1 mm | 1516228-1 |
| 5.6 mm | 1516228-2 |
| 6.2 mm | 1516228-3 |

# 38999-Style Connectors with Expanded Beam Inserts

## Shell Kits (Plug Connector Shown)

Typical Configuration and Materials

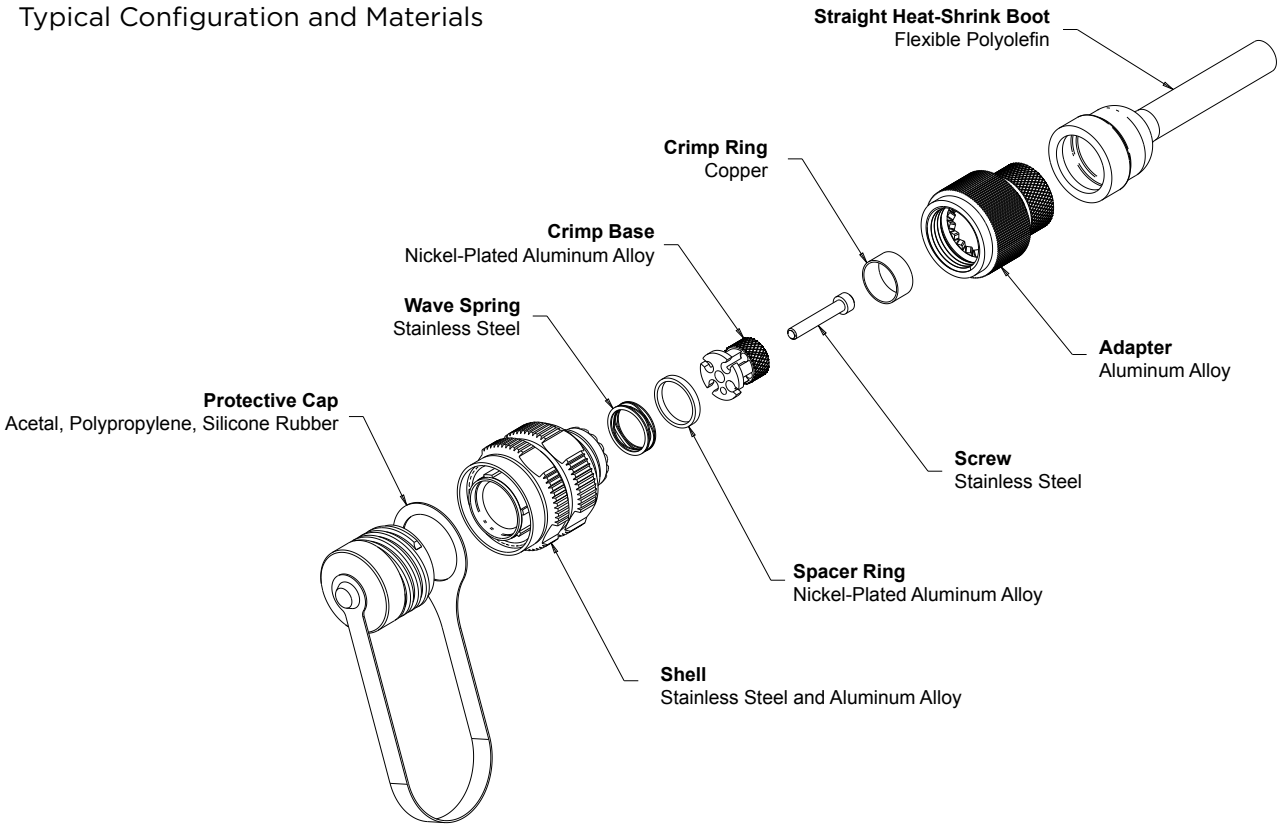


## Shell Kits

Part numbers are for N keyed connectors with black zinc nickel finish.
Consult TE for other keying and plating options.

### Shell Size 11 Kit

| Connector Style | Part No. | | |
|---|---|---|---|
| | 1.8 mm Avionics Cable | Mil Tactical Distrib. Cable | Buffered Fiber |
| Plug | 6754518-7 | 1-1985021-3 | 1-1918883-3 |
| Jam Nut Receptacle | 6754519-7 | 1-2064163-3 | 1-1918884-3 |
| Flange-Mount Receptacle | — | 1-2064166-3 | 1-1918885-3 |

### Shell Size 15 Kit

| Connector Style | Part No. | |
|---|---|---|
| | 2.2 mm Avionics Cable | End Nut Backshell for Non-Jacketed Cable |
| Plug | 1516342-7 | 1516338-7 |
| Jam Nut Receptacle | 1516343-7 | 1516339-7 |
| Flange-Mount Receptacle | 1516344-7 | 1516340-7 |

# 38999-Style Connectors with Expanded Beam Inserts

## Plug
Shell Size 11

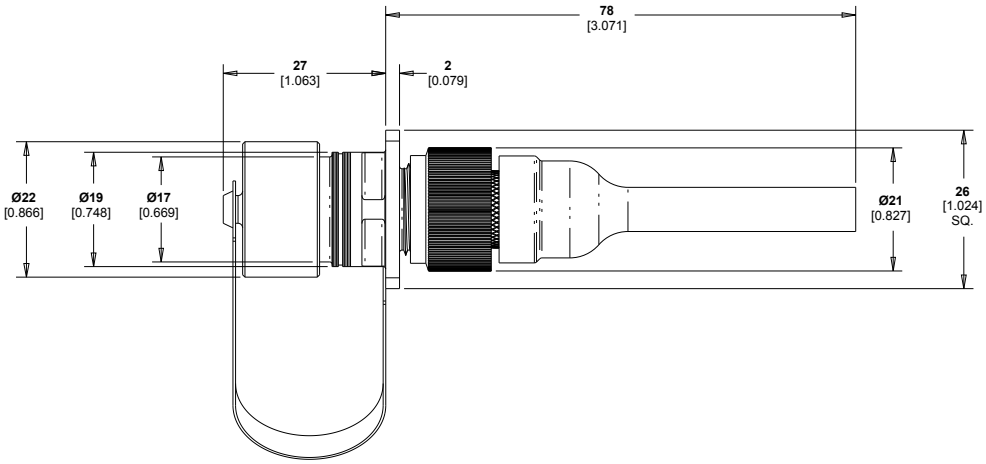


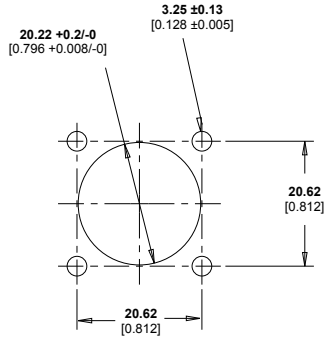


RECOMMENDED PANEL CUTOUT

## Jam Nut Receptacle
Shell Size 11

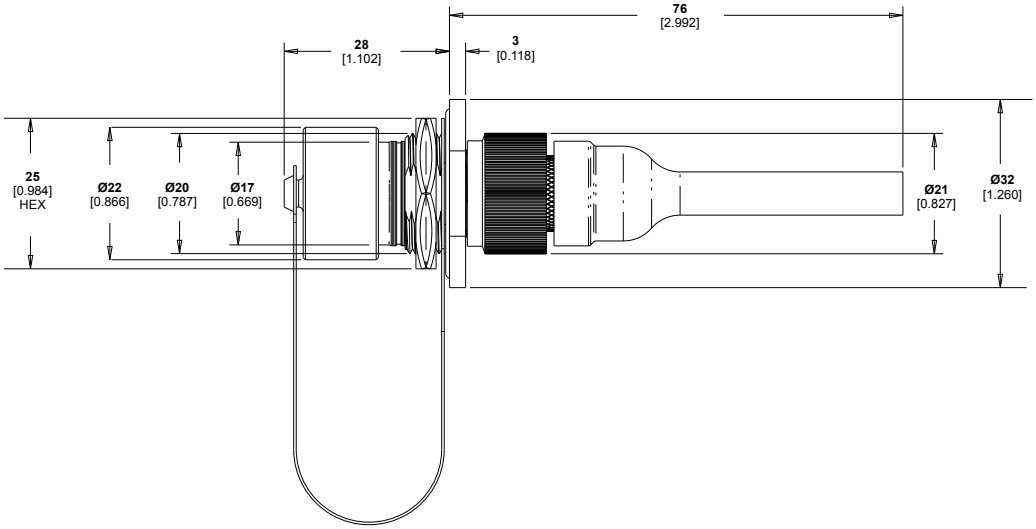


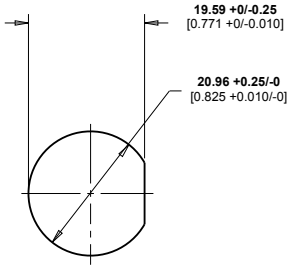


RECOMMENDED PANEL CUTOUT

# 38999-Style Connectors with Expanded Beam Inserts

**Square Flange Receptacle**
Shell Size 11

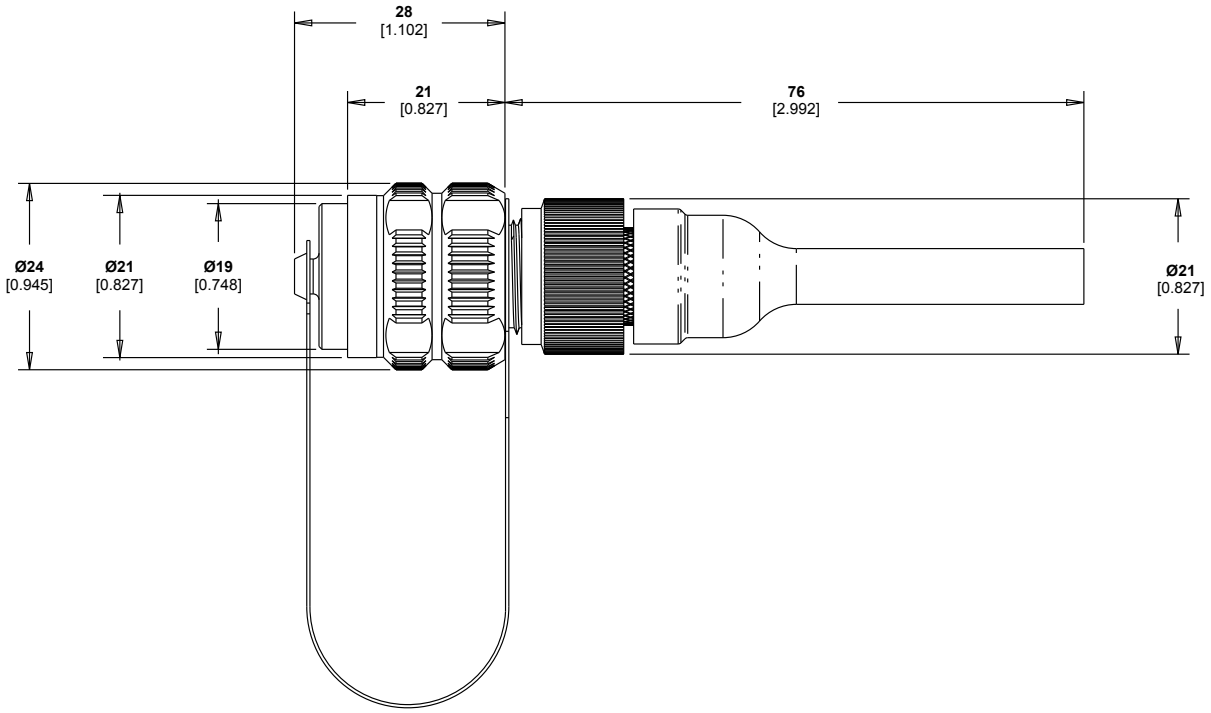


**Recommended Panels Cutouts**

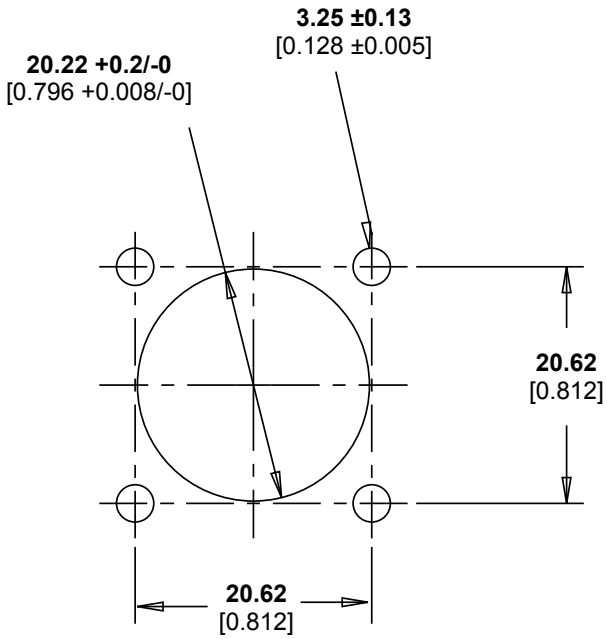


**Square Flange Receptacle**

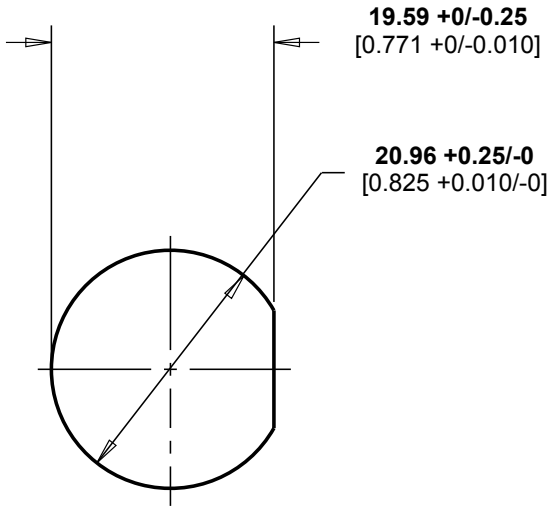


**Jam Nut Receptacle**

**INDUSTRY STANDARDIZATION**

- Selected for the ARINC 845 standard

**DURABLE**

- Minimal wear on fiber optic Interface
- Vibration resistant
- Resistant to dirt and debris

**REPEATABLE LOW-LOSS PERFORMANCE**

- Low sensitivity to thermal fluctuations and interface contamination
- Consistent overall optical "link budget"
- Stable operation over life of system

**EASY TO USE**

- Drop-in replacement for M29504/4 and /5 physical contact termini
- Durable non-contacting interface helps ensure ease of use/cleaning
- Simplified cleaning process

**VERSATILE**

- Fit standard size 16 cavity
- Field terminable

# PRO BEAM EB16 Optical Termini

## Bring Rugged Optical Performance to Mil-Standard Connectors

Leveraging our industry-accepted PRO BEAM expanded beam technology, the PRO BEAM EB16 termini are adding rugged, reliable optical performance to familiar Mil Spec connectors. The EB16 termini are a size 16 optical contact, fit-form compliant to MIL-DTL-38999 Series III size 16 cavities. These termini are a drop-in replacement for the M29504/4 and /5 physical contact termini used in many ruggedized circular connector systems.

## Non-Contacting Interface

The non-contacting interface typically results in less wear and tear overall, especially in high-mating cycle or high-vibration applications.

The termini's ball lens physically expands and collimates the optical signal into an optical beam well beyond its original size to help provide easier optical alignment, lowers sensitivity to contamination, and helps provide consistent performance over thermal changes. The beam is then refocused back down onto the core of the receiving fiber.

The beam area is expanded 30 times between lenses. The signal will not deteriorate by airborne contamination particles of the same size that affect the performance of the PC connection. The termini's endface is easily cleaned.

# PRO BEAM EB16 Optical Termini

## Specifications

### MATERIALS

- **Terminus Body and Crimp Sleeve:** Nickel-plated brass
- **Ferrule and Split Sleeve:** Zirconia
- **Ball Lens:** Glass, with antireflection coating
- **Spacer:** Stainless steel
- **Spring:** Stainless steel
- **Protective Cap:** Vinyl

### MECHANICAL/ENVIRONMENTAL

- **Durability:** >1000 mating cycles
- **Operating Temperature:** -65°C to +165°C (Cable dependent)
- **Sinusoidal Vibration:** TIA/EIA-455-11C, Test Condition IV
- **Random Vibration:** TIA/EIA-455-11C, Test Condition VI-J
- **Mechanical Shock:** TIA/EIA-455-14A, Test Condition C
- **Thermal Cycling:** TIA/EIA-455-3B, Test Condition C-2
- **Thermal Shock:** TIA/EIA-455-71, Schedule C-0 (5 cycles)

### OPTICAL

- **Insertion Loss:** 1.5 dB max. @ 850/1300 nm (Multimode fiber)

### STANDARDS

- **Industry Standards:** SAE AS3 AS6250, AS6251, and ARINC 845
- **TE Application Specification:** 108-127013
- **TE Instruction Sheet:** 408-32132
- **TE Qualification Test Report:** 501-32028

### APPLICATIONS

- Radar and Sensor Systems
- Rugged Network Applications
- Fixed Wing and Rotary Aircraft
- Unmanned Systems
- Commercial Aviation

| Type | Part No. |
|---|---|
| Pin | 2125059-1 |
| Socket | 2125046-1 |

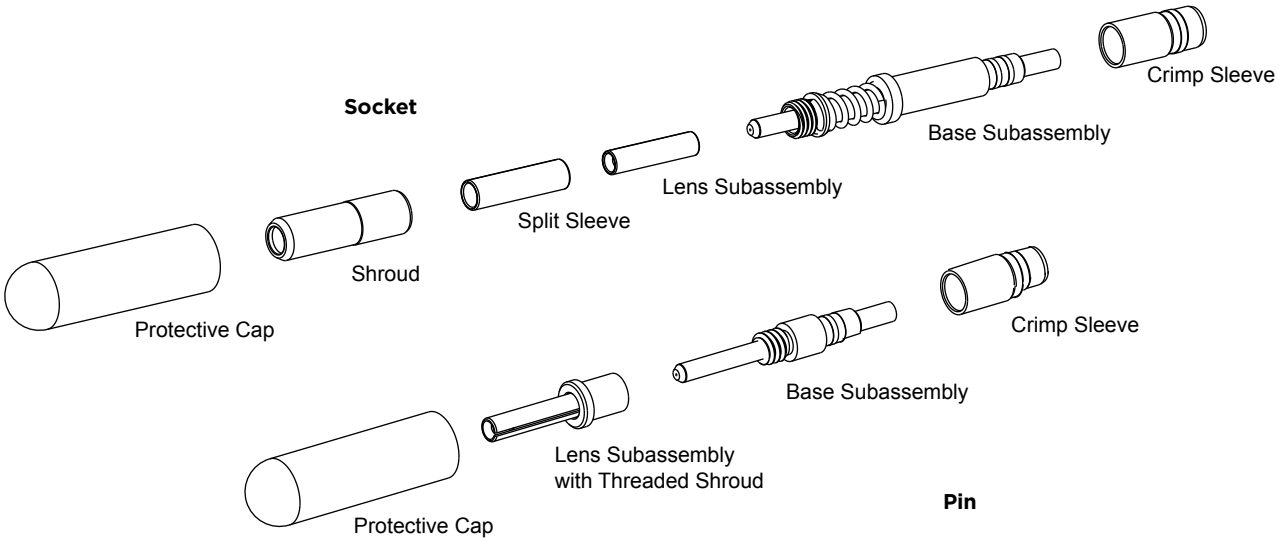

### MIL SPEC

- Manufactured to meet the requirements of MIL-T-29504/4 and 5
- Designed for use in any MIL-DTL-38999 Size 16 cavity

### HIGH PERFORMANCE

- Widely used in both rotary and fixed-wing aerospace applications
- Spring-loaded socket contacts help ensure consistent mating pressure and performance levels

# MIL-T-29504 Style Optical Termini

Widely used in rotary and fixed-wing aerospace applications, our rugged optical termini is rated for 500 mating cycles and feature spring-loaded socket contacts to help ensure consistent mating pressure and performance levels. They are designed for use in any MIL-DTL-38999 Size 16 cavity, and manufactured to meet MIL-T-29504/4 and/5 requirements.

## Specifications

### FIBER TYPES

- **Single Mode:** 9/125 µm
- **Multimode:** 50/125, 62.5/125, 200/280 µm
- **Cable Size:** 1.8 mm, 2.5 mm

### OPTICAL PERFORMANCE

(Depends on fiber type and finish)

- **Insertion Loss:** 0.6 dB typical
- **Return Loss:** -40 dB typical
- **Repeatability:** 0.2 dB typica

### MATERIALS

- **Ferrule:** Zirconia
- **Alignment Sleeve:** Ceramic zirconia
- **Spring:** Stainless steel
- **Terminus Assembly:** ARCAP alloy
- **Heat Shrink Sleeve:** PVDF

### ENVIRONMENTAL/MECHANICAL

- **Temperature Range:** -55°C to +150°C
- **Durability:** 500 mating cycles
- **Vibration:** 20 g, 20 to 2000 Hz

# MIL-T-29504 Style Optical Termini

## Socket (457462)

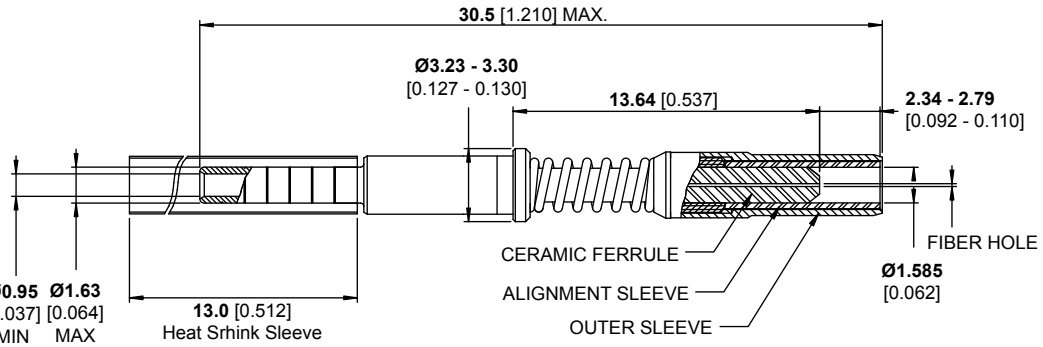


## Pin (457463)

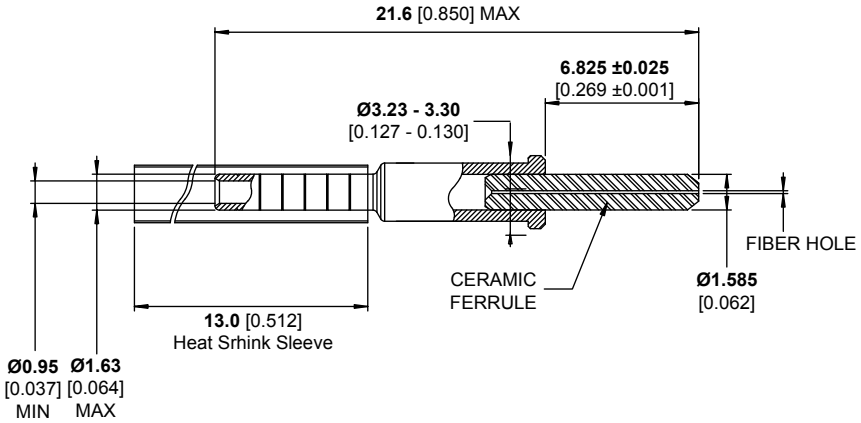


### Part Numbering

**457462 - 126 - 200**

**CONTACT TYPE**
- **457462** Socket
- **457463** Pin

**FERRULE FIBER HOLE SIZE (µM)**
- **126**
- **127**
- **283**

**CABLE JACKET DIAMETER**
- **200** 1.2-2.0 mm
- **250** 2.0–2.5 mm

## EASY TO USE

- Screen termination by stainless steel band
- Sealing and strain relief of backshell by heat shrink boot

## VERSATILE

- Versions for all 38999 series
- Straight, 45°, and 90° profiles
- Optional pigtail termination slots

# POLAMCO BT Series Banding Backshells

BT Series backshells terminate the shield with a stainless steel band strap. Additional strain relief can be obtained with a heat-shrink boot.

### Part Numbering System

**BT H 1 - 17 - 08 - 1 - C SL**

**SERIES**
- **BT** Banding Backshell

**CONNECTOR INTERFACE**
- **F** 38999 Series I and II
- **H** 38999 Series III and IV

**ANGLE**
- **1** Straight
- **2** 45°
- **3** 90°

**SHELL SIZE**
- **09, 11, 13, 15, 17, 19, 21, 23, 25**

**ENTRY SIZE**
- See Entry Size Table

**MATERIAL**
- **1** Aluminum Alloy

**FINISH**
- **C** Electroless Nickel
- **B** Cadmium Olive Drab over Electroless Nickel
- **ZB** Zinc Cobalt Olive Drab over Electroless Nickel
- **ZN** Zinc Nickel Black Passivate over Electroless Nickel

**SLOT OPTION**
- Omit For Standard (No Slot)
- **SL** With Slots

# POLAMCO BT Series Banding Backshells

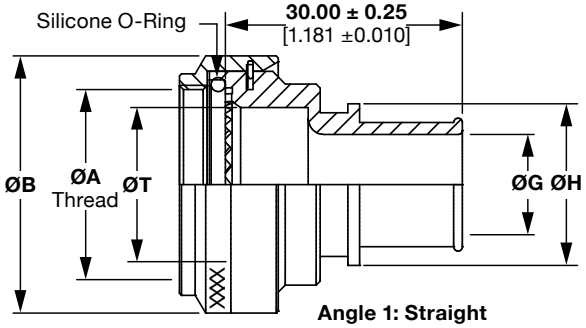


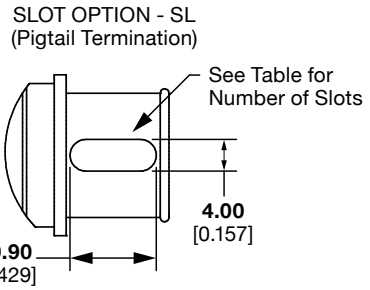


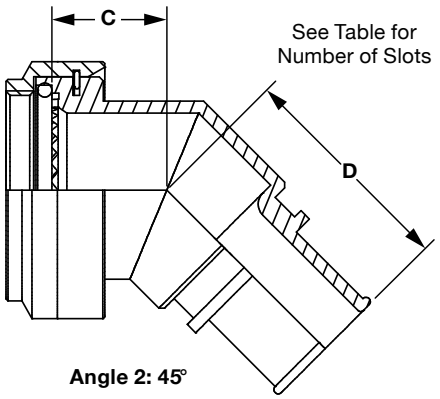


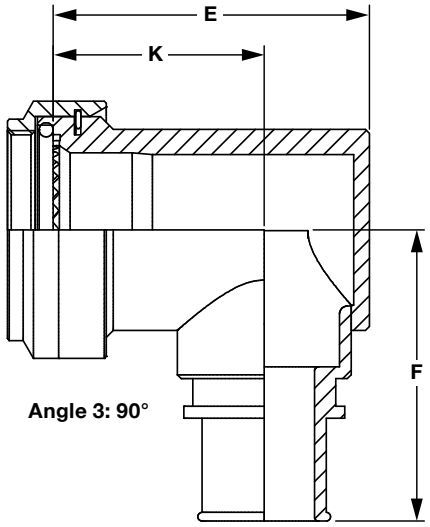


## BTF Series for 38999 Series I (Consult TE for Series II)

| Shell Size | A Thread BTH (BTF) | ØB Max. BTF | ØT Min. | C Max. | D Max. | E Max. | F Max. | K ±0.5 (0.020) |
|---|---|---|---|---|---|---|---|---|
| **09** | 7/16-28 | **18.3**<br>0.720 | **6.7**<br>0.264 | **13.1**<br>0.516 | **25.7**<br>1.012 | **25.7**<br>1.012 | **30.5**<br>1.201 | **17.5**<br>0.689 |
| **11** | 9/16-24 | **21.5**<br>0.846 | **10.2**<br>0.402 | **13.9**<br>0.547 | **26.9**<br>1.059 | **26.7**<br>1.051 | **32.2**<br>1.268 | **17.5**<br>0.689 |
| **13** | 11/16-24 | **24.5**<br>0.965 | **13.5**<br>0.531 | **14.5**<br>0.571 | **27.3**<br>1.075 | **31.2**<br>1.228 | **33.7**<br>1.327 | **20.0**<br>0.787 |
| **15** | 13/16-20 | **27.8**<br>1.094 | **16.2**<br>0.638 | **15.5**<br>0.610 | **28.2**<br>1.110 | **37.2**<br>1.465 | **35.2**<br>1.386 | **24.5**<br>0.965 |
| **17** | 15/16-20 | **30.8**<br>1.213 | **19.4**<br>0.764 | **16.1**<br>0.634 | **29.0**<br>1.142 | **40.2**<br>1.583 | **36.9**<br>1.453 | **26.7**<br>1.051 |
| **19** | 1-1/16-18 | **34.1**<br>1.343 | **21.8**<br>0.858 | **16.8**<br>0.661 | **29.3**<br>1.154 | **44.7**<br>1.760 | **38.5**<br>1.516 | **27.0**<br>1.063 |
| **21** | 1-3/16-18 | **37.3**<br>1.469 | **25.1**<br>0.988 | **17.1**<br>0.673 | **30.1**<br>1.185 | **49.2**<br>1.937 | **40.1**<br>1.579 | **30.5**<br>1.201 |
| **23** | 1-5/16-18 | **40.5**<br>1.594 | **28.2**<br>1.110 | **17.7**<br>0.697 | **30.5**<br>1.201 | **51.7**<br>2.035 | **41.6**<br>1.638 | **31.5**<br>1.240 |
| **25** | 1-7/16-18 | **43.7**<br>1.720 | **31.4**<br>1.236 | **18.4**<br>0.724 | **31.4**<br>1.236 | **53.2**<br>2.094 | **43.1**<br>1.697 | **28.5**<br>1.122 |

**Millimeters** Inches

# POLAMCO BT Series Banding Backshells

## BTH Series for 38999 Series III and IV

| Shell Size | A Thread | ØB Max. | ØT Min. | C Max. | D Max. | E Max. | F Max. | K ±0.5 (0.020) |
|---|---|---|---|---|---|---|---|---|
| **09** | M12 x 1.0 | **18.0** 0.709 | **6.7** 0.264 | **13.1** 0.516 | **25.7** 1.012 | **25.7** 1.012 | **30.5** 1.201 | **17.5** 0.689 |
| **11** | M15 x 1.0 | **21.0** 0.827 | **10.2** 0.402 | **13.9** 0.547 | **26.9** 1.059 | **26.7** 1.051 | **32.2** 1.268 | **17.5** 0.689 |
| **13** | M18 x 1.0 | **24.5** 0.965 | **13.5** 0.531 | **14.5** 0.571 | **27.3** 1.075 | **31.2** 1.228 | **33.7** 1.327 | **20.0** 0.787 |
| **15** | M22 x 1.0 | **29.0** 1.142 | **16.2** 0.638 | **15.5** 0.610 | **28.2** 1.110 | **37.2** 1.465 | **35.2** 1.386 | **24.5** 0.965 |
| **17** | M25 x 1.0 | **32.5** 1.280 | **19.4** 0.764 | **16.1** 0.634 | **29.0** 1.142 | **40.2** 1.583 | **36.9** 1.453 | **26.7** 1.051 |
| **19** | M28 x 1.0 | **35.5** 1.398 | **21.8** 0.858 | **16.8** 0.661 | **29.3** 1.154 | 44.7 1.760 | **38.5** 1.516 | **27.0** 1.063 |
| **21** | M31 x 1.0 | **37.0** 1.457 | **25.1** 0.988 | **17.1** 0.673 | **30.1** 1.185 | **49.2** 1.937 | **40.1** 1.579 | **30.5** 1.201 |
| **23** | M34 x 1.0 | **40.0** 1.575 | **28.2** 1.110 | **17.7** 0.697 | **30.5** 1.201 | **51.7** 2.035 | **41.6** 1.638 | **31.5** 1.240 |
| **25** | M37 x 1.0 | **43.5** 1.713 | **31.4** 1.236 | **18.4** 0.724 | **31.4** 1.236 | **53.2** 2.094 | **43.1** 1.697 | **28.5** 1.122 |

**Millimeters** Inches

## Entry Size Dimensions

| Entry Size | ØG Min. | ØH Max. | No. Of Optional Slots |
|---|---|---|---|
| **03** | **4.7** 0.185 | **13.9** 0.547 | 1 |
| **04** | **6.3** 0.248 | **13.9** 0.547 | 1 |
| **05** | **7.9** 0.311 | **15.5** 0.610 | 1 |
| **06** | **9.5** 0.374 | **17.2** 0.677 | 2 |
| **07** | **11.1** 0.437 | **18.7** 0.736 | 2 |
| **08** | **12.7** 0.500 | **20.3** 0.799 | 2 |
| **09** | **14.2** 0.559 | **21.9** 0.862 | 2 |
| **10** | **15.8** 0.622 | **23.5** 0.925 | 2 |
| **11** | **17.4** 0.685 | **25.1** 0.988 | 2 |
| **12** | **19.0** 0.748 | **26.7** 1.051 | 2 |
| **13** | **20.6** 0.811 | **28.3** 1.114 | 2 |

**Millimeters** Inches

| Entry Size | ØG Min. | ØH Max. | No. Of Optional Slots |
|---|---|---|---|
| **14** | **22.2** 0.874 | **29.9** 1.177 | 4 |
| **15** | **23.8** 0.937 | **31.5** 1.240 | 4 |
| **16** | **25.4** 1.000 | **33.1** 1.303 | 4 |
| **17** | **27.0** 1.063 | **34.7** 1.366 | 4 |
| **18** | **28.6** 1.126 | **36.3** 1.429 | 4 |
| **19** | **30.2** 1.189 | **37.9** 1.492 | 4 |
| **20** | **31.8** 1.252 | **39.5** 1.555 | 4 |
| **21** | **33.3** 1.311 | **41.1** 1.618 | 4 |
| **22** | **35.0** 1.378 | **42.7** 1.681 | 4 |
| **23** | **36.5** 1.437 | **44.3** 1.744 | 4 |
| **24** | **38.1** 1.500 | **45.9** 1.807 | 4 |

**Millimeters** Inches

## EASY TO USE

- Individual screen termination using castellated cone
- No application tooling required for termination or re-work
- Alternate angles and lengths on request

## RELIABLE

- Sealing and strain relief of backshell by heat shrink boot
- Solid machined construction for reliable strength and performance
- Cable clamp option available for additional mechanical strain relief

## VERSATILE

- Plain nut version available
- Cone clamp feature may be re-used
- Straight, 45 degree, and 90 degree standard
- Aluminum, bronze, and stainless steel

# POLAMCO 64 Series Cone Clamp Adapters

The 64 Series adapters terminate individual shields with a castellated cone to compress the braid.

### Part Numbering System

**64 F 1 - 17 - 1 - C - CC**

**SERIES**
- **64** Cone Clamp Adapter

**CONNECTOR INTERFACE**
- **F** 38999 Series I and II
- **H** 38999 Series III and IV

**ANGLE**
- **1** Straight
- **2** 45°
- **3** 90°

**SHELL SIZE**
- **09, 11, 13, 15, 17, 19, 21, 23, 25**

**MATERIAL**
- **1** Aluminum Alloy

**FINISH**
- **C** Electroless Nickel
- **B** Cadmium Olive Drab over Electroless Nickel
- **ZB** Zinc Cobalt Olive Drab over Electroless Nickel
- **ZN** Zinc Nickel Black Passivate over Electroless Nickel

**CABLE CLAMP OPTION**
- Omit for Plain Nut
- <Other options?>

# POLAMCO 64 Series Cone Clamp Adapters

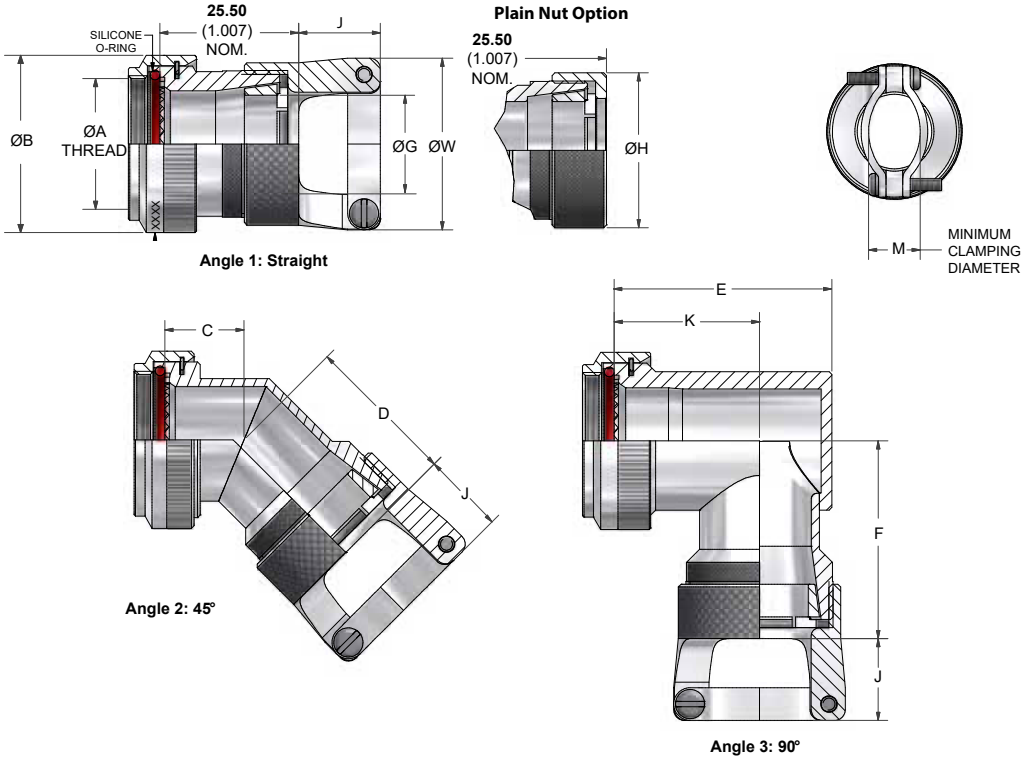


## 64F Series for 38999 Series I Connectors (Consult TE for Series II)

| Shell Size | A Thread (UNEF) | ØB Max. | C ±0.5 (0.020) | D Max. | E Max. | F Max. | ØG Min. | ØW Max. | ØH Max. | J Max. | K ±0.5 (0.020) | M ±0.5 (0.020) |
|---|---|---|---|---|---|---|---|---|---|---|---|---|
| **09** | 7/16-28 | **18.0**<br>0.709 | **16.4**<br>0.646 | **24.6**<br>0.969 | **22.7**<br>0.894 | **30.1**<br>1.185 | **6.6**<br>0.260 | **20.7**<br>0.815 | **16.0**<br>0.630 | **15.2**<br>0.598 | **15.0**<br>0.591 | **7.8**<br>0.307 |
| **11** | 9/16-24 | **21.0**<br>0.827 | **17.2**<br>0.677 | **25.4**<br>1.000 | **26.2**<br>1.031 | **31.9**<br>1.256 | **9.3**<br>0.366 | **23.8**<br>0.937 | **19.0**<br>0.748 | **15.2**<br>0.598 | **17.0**<br>0.669 | **8.6**<br>0.339 |
| **13** | 11/16-24 | **24.5**<br>0.965 | **17.6**<br>0.693 | **26.3**<br>1.035 | **29.2**<br>1.150 | **33.4**<br>1.315 | **12.6**<br>0.496 | **27.0**<br>1.063 | **22.0**<br>0.866 | **15.2**<br>0.598 | **18.0**<br>0.709 | **10.2**<br>0.402 |
| **15** | 13/16-20 | **27.8**<br>1.094 | **18.5**<br>0.728 | **26.7**<br>1.051 | **32.2**<br>1.268 | **34.9**<br>1.374 | **14.6**<br>0.575 | **28.6**<br>1.126 | **25.4**<br>1.000 | **15.2**<br>0.598 | **20.0**<br>0.787 | **10.4**<br>0.409 |
| **17** | 15/16-20 | **30.8**<br>1.213 | **19.2**<br>0.756 | **27.5**<br>1.083 | **35.7**<br>1.406 | **36.6**<br>1.441 | **17.7**<br>0.697 | **31.8**<br>1.252 | **28.5**<br>1.122 | **15.2**<br>0.598 | **21.5**<br>0.846 | **12.4**<br>0.488 |
| **19** | 1-1/16-18 | **34.1**<br>1.343 | **19.6**<br>0.772 | **27.8**<br>1.094 | **39.7**<br>1.563 | **38.2**<br>1.504 | **19.8**<br>0.780 | **35.0**<br>1.378 | **32.0**<br>1.260 | **18.2**<br>0.717 | **23.0**<br>0.906 | **15.4**<br>0.606 |
| **21** | 1-3/16-18 | **37.3**<br>1.469 | **20.4**<br>0.803 | **28.6**<br>1.126 | **42.2**<br>1.661 | **39.8**<br>1.567 | **23.0**<br>0.906 | **38.1**<br>1.500 | **35.0**<br>1.378 | **18.2**<br>0.717 | **25.0**<br>0.984 | **17.3**<br>0.681 |
| **23** | 1-5/16-18 | **41.0**<br>1.614 | **20.8**<br>0.819 | **29.5**<br>1.161 | **45.2**<br>1.780 | **41.3**<br>1.626 | **26.2**<br>1.031 | **39.7**<br>1.563 | **38.0**<br>1.496 | **18.2**<br>0.717 | **26.0**<br>1.024 | **18.8**<br>0.740 |
| **25** | 117/16-18 | **43.7**<br>1.720 | **21.7**<br>0.854 | **29.9**<br>1.177 | **48.2**<br>1.898 | **42.8**<br>1.685 | **29.1**<br>1.146 | **44.5**<br>1.752 | **41.0**<br>1.614 | **18.2**<br>0.717 | **28.0**<br>1.102 | **22.4**<br>0.882 |

**Millimeters** Inches

# POLAMCO 64 Series Cone Clamp Adapters

## 64H Series for 38999 Series III and IV

| Shell Size | A Thread | ØB Max. | C ±0.5 (0.020) | D Max. | E Max. | F Max. | ØG Min. | ØW Max. | ØH Max. | J Max. | K ±0.5 (0.020) | M ±0.5 (0.020) |
|---|---|---|---|---|---|---|---|---|---|---|---|---|
| **09** | M12 x 1.0 | **18.0**<br>0.709 | **13.1**<br>0.516 | **24.6**<br>0.969 | **25.7**<br>1.012 | **30.1**<br>1.185 | **6.6**<br>0.260 | **20.7**<br>0.815 | **16.0**<br>0.630 | **15.2**<br>0.598 | **17.5**<br>0.689 | **7.8**<br>0.307 |
| **11** | M15 x 1.0 | **21.0**<br>0.827 | **13.9**<br>0.547 | **25.4**<br>1.000 | **26.7**<br>1.051 | **31.9**<br>1.256 | **9.3**<br>0.366 | **23.8**<br>0.937 | **19.0**<br>0.748 | **15.2**<br>0.598 | **17.5**<br>0.689 | **8.6**<br>0.339 |
| **13** | M18 x 1.0 | **24.5**<br>0.965 | **14.5**<br>0.571 | **26.3**<br>1.035 | **31.2**<br>1.228 | **33.4**<br>1.315 | **12.6**<br>0.496 | **27.0**<br>1.063 | **22.0**<br>0.866 | **15.2**<br>0.598 | **20.0**<br>0.787 | **10.2**<br>0.402 |
| **15** | M22 x 1.0 | **29.0**<br>1.142 | **15.5**<br>0.610 | **26.7**<br>1.051 | **37.2**<br>1.465 | **34.9**<br>1.374 | **14.6**<br>0.575 | **28.6**<br>1.126 | **26.5**<br>1.043 | **15.2**<br>0.598 | **24.5**<br>0.965 | **10.4**<br>0.409 |
| **17** | M25 x 1.0 | **32.5**<br>1.280 | **16.1**<br>0.634 | **27.5**<br>1.083 | **40.2**<br>1.583 | **36.6**<br>1.441 | **17.7**<br>0.697 | **31.8**<br>1.252 | **29.8**<br>1.173 | **15.2**<br>0.598 | **26.7**<br>1.051 | **12.4**<br>0.488 |
| **19** | M28 x 1.0 | **35.5**<br>1.398 | **16.8**<br>0.661 | **27.8**<br>1.094 | **44.7**<br>1.760 | **38.2**<br>1.504 | **19.8**<br>0.780 | **35.0**<br>1.378 | **33.0**<br>1.299 | **18.2**<br>0.717 | **27.0**<br>1.063 | **15.4**<br>0.606 |
| **21** | M31 x 1.0 | **37.0**<br>1.457 | **17.1**<br>0.673 | **28.6**<br>1.126 | **49.2**<br>1.937 | **39.8**<br>1.567 | **23.0**<br>0.906 | **38.1**<br>1.500 | **35.0**<br>1.378 | **18.2**<br>0.717 | **30.5**<br>1.201 | **17.3**<br>0.681 |
| **23** | M34 x 1.0 | **40.0**<br>1.575 | **17.7**<br>0.697 | **29.5**<br>1.161 | **51.7**<br>2.035 | **41.3**<br>1.626 | **26.2**<br>1.031 | **39.7**<br>1.563 | **38.0**<br>1.496 | **18.2**<br>0.717 | **31.5**<br>1.240 | **18.8**<br>0.740 |
| **25** | M37 x 1.0 | **43.5**<br>1.713 | **18.4**<br>0.724 | **29.9**<br>1.177 | **53.2**<br>2.094 | **42.8**<br>1.685 | **29.1**<br>1.146 | **44.5**<br>1.752 | **41.0**<br>1.614 | **18.2**<br>0.717 | **28.5**<br>1.122 | **22.4**<br>0.882 |

**Millimeters** Inches

## VERSATILE

- Interfaces with 38999 Series I, II, III and IV connectors
- Available in straight, 45°, and 90° angle mounting configurations
- Variety of finishes available

## LIGHTWEIGHT

- Aluminum alloy saves weight
- Low-profile shield termination

## HIGH RELIABILITY

- Magna-form memory ring adapter technology
- Optional pre-terminated braid sock

# POLAMCO 70 Series Memory Ring Adapters

The 70 Series adapters help provide a high-reliability, low profile shield termination using magna-form memory ring technology. The adapters are available with an optional pre-terminated braid sock.

### Part Numbering System

**70 F 1 - 17 - 08 - 1 - C - N**

**SERIES**
- **70** Memory Ring Adapter with Optional Braid Tail Material

**CONNECTOR INTERFACE**
- **F** 38999 Series I and II
- **H** 38999 Series III and IV

**ANGLE**
- **1** Straight
- **2** 45°
- **3** 90°

**SHELL SIZE**
- **09, 11, 13, 15, 17, 19, 21, 23, 25**

**ENTRY SIZE**
- See Entry Size Table

**MATERIAL**
- **1** Aluminum Alloy

**FINISH**
- **C** Electroless Nickel
- B Cadmium Olive Drab over Electroless Nickel
- **ZB** Zinc Cobalt Olive Drab over Electroless Nickel
- **ZN** Zinc Nickel Black Passivate over Electroless Nickel

**BRAID TAIL**
- Omit for Tinned Copper
- **N** Nickel-Plated Braid

# POLAMCO 70 Series Memory Ring Adapters

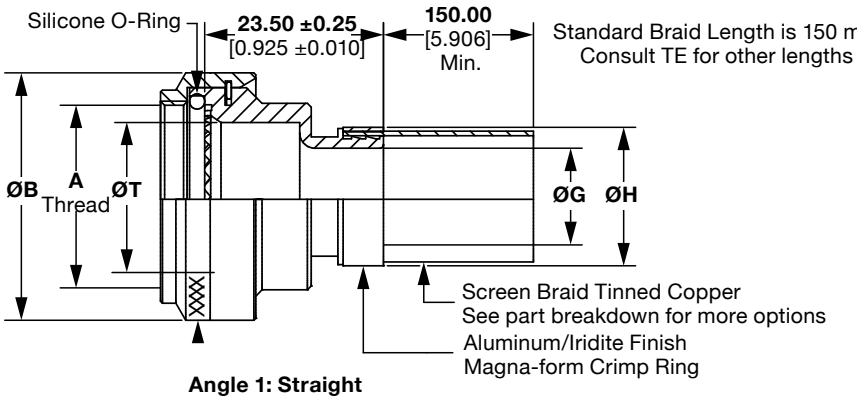


**Angle 1: Straight**

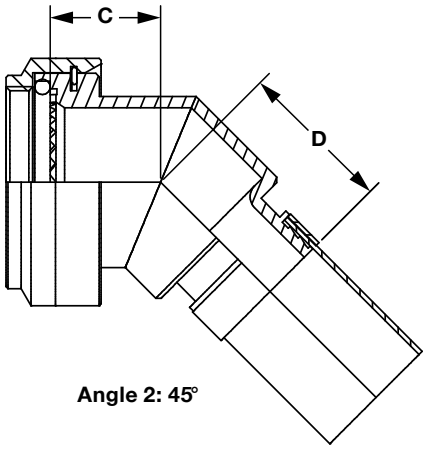


**Angle 2: 45°**

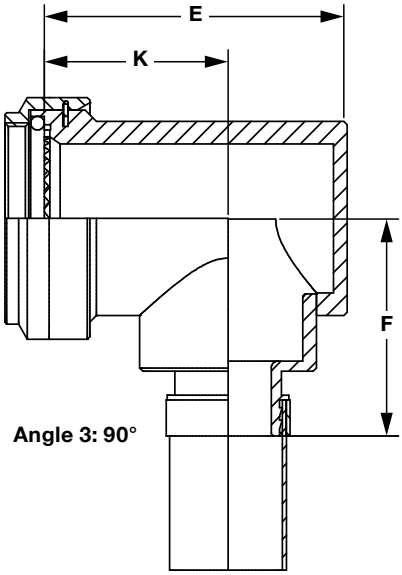


**Angle 3: 90°**

## 70F Series for 38999 Series I (Consult TE for Series II)

| Shell Size | A Thread (UNEF) | ØB Max. | ØT Min. | C Max. | D ±0.5 (0.020) | E Max. | F Max. | K ±0.5 (0.020) |
|---|---|---|---|---|---|---|---|---|
| **09** | 7/16-28 | **18.0**<br>0.709 | **6.8**<br>0.268 | **16.4**<br>0.646 | **17.1**<br>0.673 | **22.7**<br>0.894 | **24.0**<br>0.945 | **15.0**<br>0.591 |
| **11** | 9/16-24 | **21.0**<br>0.827 | **10.2**<br>0.402 | **17.2**<br>0.677 | **18.2**<br>0.717 | **26.2**<br>1.031 | **25.7**<br>1.012 | **17.0**<br>0.669 |
| **13** | 11/16-24 | **24.5**<br>0.965 | **13.1**<br>0.516 | **17.6**<br>0.693 | **18.6**<br>0.732 | **29.2**<br>1.150 | **27.2**<br>1.071 | **18.0**<br>0.709 |
| **15** | 13/16-20 | **27.8**<br>1.094 | **16.2**<br>0.638 | **18.5**<br>0.728 | **19.5**<br>0.768 | **32.2**<br>1.268 | **28.7**<br>1.130 | **20.0**<br>0.787 |
| **17** | 15/16-20 | **30.8**<br>1.213 | **19.3**<br>0.760 | **20.2**<br>0.795 | **20.3**<br>0.799 | **35.7**<br>1.406 | **30.4**<br>1.197 | **21.5**<br>0.846 |
| **19** | 1-1/16-18 | **34.1**<br>1.343 | **22.3**<br>0.878 | **19.6**<br>0.772 | **20.8**<br>0.819 | **39.7**<br>1.563 | **32.0**<br>1.260 | **23.0**<br>0.906 |
| **21** | 1-3/16-18 | **37.3**<br>1.469 | **25.8**<br>1.016 | **20.4**<br>0.803 | **21.7**<br>0.854 | **42.2**<br>1.661 | **33.6**<br>1.323 | **25.0**<br>0.984 |
| **23** | 1-5/16-18 | **41.0**<br>1.614 | **28.3**<br>1.114 | **20.8**<br>0.819 | **22.0**<br>0.866 | **45.2**<br>1.780 | **35.1**<br>1.382 | **26.0**<br>1.024 |
| **25** | 1-7/16-18 | **43.7**<br>1.720 | **31.5**<br>1.240 | **21.7**<br>0.854 | **22.9**<br>0.902 | **48.2**<br>1.898 | **36.6**<br>1.441 | **28.0**<br>1.102 |

**Millimeters** Inches

# POLAMCO 70 Series Memory Ring Adapters

## 70H Series for 38999 Series III and IV

| Shell Size | A Thread | ØB Max. | ØT Min. | C Max. | D ±0.5 (0.020) | E Max. | F Max. | K ±0.5 (0.020) |
|---|---|---|---|---|---|---|---|---|
| **09** | M12 x 1.0 | **18.0**<br>0.709 | **6.7**<br>0.264 | **13.1**<br>0.516 | **17.1**<br>0.673 | **25.7**<br>1.012 | **24.0**<br>0.945 | **17.5**<br>0.689 |
| **11** | M15 x 1.0 | **21.0**<br>0.827 | **10.2**<br>0.402 | **13.9**<br>0.547 | **18.2**<br>0.717 | **26.7**<br>1.051 | **25.7**<br>1.012 | **17.5**<br>0.689 |
| **13** | M18 x 1.0 | **24.5**<br>0.965 | **13.5**<br>0.531 | **14.5**<br>0.571 | **18.6**<br>0.732 | **31.2**<br>1.228 | **27.2**<br>1.071 | **20.0**<br>0.787 |
| **15** | M22 x 1.0 | **29.0**<br>1.142 | **16.2**<br>0.638 | **15.5**<br>0.610 | **19.5**<br>0.768 | **37.2**<br>1.465 | **28.7**<br>1.130 | **24.5**<br>0.965 |
| **17** | M25 x 1.0 | **32.5**<br>1.280 | **19.4**<br>0.764 | **16.1**<br>0.634 | **20.3**<br>0.799 | **40.2**<br>1.583 | **30.4**<br>1.197 | **26.7**<br>1.051 |
| **19** | M28 x 1.0 | **35.5**<br>1.398 | **21.8**<br>0.858 | **16.8**<br>0.661 | **20.8**<br>0.819 | **44.7**<br>1.760 | **32.0**<br>1.260 | **27.0**<br>1.063 |
| **21** | M31 x 1.0 | **37.0**<br>1.457 | **25.1**<br>0.988 | **17.1**<br>0.673 | **21.7**<br>0.854 | **49.2**<br>1.937 | **33.6**<br>1.323 | **30.5**<br>1.201 |
| **23** | M34 x 1.0 | **40.0**<br>1.575 | **28.2**<br>1.110 | **17.7**<br>0.697 | **22.0**<br>0.866 | **51.7**<br>2.035 | **35.1**<br>1.382 | **31.5**<br>1.240 |
| **25** | M37 x 1.0 | **43.5**<br>1.713 | **31.4**<br>1.236 | **18.4**<br>0.724 | **22.9**<br>0.902 | **53.2**<br>2.094 | **36.6**<br>1.441 | **28.5**<br>1.122 |

**Millimeters** Inches

## Entry Size Dimensions

| Entry Size | ØG Min. | ØH Max. | No. Of Optional Slots |
|---|---|---|---|
| **03** | **4.7**<br>0.185 | **13.9**<br>0.547 | 1 |
| **04** | **6.3**<br>0.248 | **13.9**<br>0.547 | 1 |
| **05** | **7.9**<br>0.311 | **15.5**<br>0.610 | 1 |
| **06** | **9.5**<br>0.374 | **17.2**<br>0.677 | 2 |
| **07** | **11.1**<br>0.437 | **18.7**<br>0.736 | 2 |
| **08** | **12.7**<br>0.500 | **20.3**<br>0.799 | 2 |
| **09** | **14.2**<br>0.559 | **21.9**<br>0.862 | 2 |
| **10** | **15.8**<br>0.622 | **23.5**<br>0.925 | 2 |
| **11** | **17.4**<br>0.685 | **25.1**<br>0.988 | 2 |
| **12** | **19.0**<br>0.748 | **26.7**<br>1.051 | 2 |
| **13** | **20.6**<br>0.811 | **28.3**<br>1.114 | 2 |

**Millimeters** Inches

| Entry Size | ØG Min. | ØH Max. | No. Of Optional Slots |
|---|---|---|---|
| **14** | **22.2**<br>0.874 | **29.9**<br>1.177 | 4 |
| **15** | **23.8**<br>0.937 | **31.5**<br>1.240 | 4 |
| **16** | **25.4**<br>1.000 | **33.1**<br>1.303 | 4 |
| **17** | **27.0**<br>1.063 | **34.7**<br>1.366 | 4 |
| **18** | **28.6**<br>1.126 | **36.3**<br>1.429 | 4 |
| **19** | **30.2**<br>1.189 | **37.9**<br>1.492 | 4 |
| **20** | **31.8**<br>1.252 | **39.5**<br>1.555 | 4 |
| **21** | **33.3**<br>1.311 | **41.1**<br>1.618 | 4 |
| **22** | **35.0**<br>1.378 | **42.7**<br>1.681 | 4 |
| **23** | **36.5**<br>1.437 | **44.3**<br>1.744 | 4 |
| **24** | **38.1**<br>1.500 | **45.9**<br>1.807 | 4 |

**Millimeters** Inches

## VERSATILE

- Interfaces with 38999 Series I, II, III and IV connectors
- Available in straight, 45°, and 90° angle mounting configurations
- Variety of finishes available

## LIGHTWEIGHT

- Aluminum alloy saves weight
- Low-profile shield termination

## HIGH RELIABILITY

- Constant force stainless steel spring enables fast, reliable termination

## EASY TO USE

- Tool-free screen termination
- Variety of shell sizes available from stock
- Heat-shrink boot option available for strain relief and cable sealing

# POLAMCO 91 Series Spring Adapters

The 91 Series adapters use a constant-force spring to help provide a fast, reliable shield termination without tools.

**Part Numbering System**

**91 F 1 - 17 - 08 - 1 - C - SL - HE200**

**SERIES**
**91** Spring Adapter

**CONNECTOR INTERFACE**
**F** 38999 Series I and II
**H** 38999 Series III and IV

**ANGLE**
**1** Straight
**2** 45°
**3** 90°

**SHELL SIZE**
**09, 11, 13, 15, 17, 19, 21, 23, 25**

**ENTRY SIZE**
See Entry Size Table

**MATERIAL**
**1** Aluminum Alloy

**FINISH**
**C** Electroless Nickel
**B** Cadmium Olive Drab over Electroless Nickel
**ZB** Zinc Cobalt Olive Drab over Electroless Nickel
**ZN** Zinc Nickel Black Passivate over Electroless Nickel

**SLOT OPTION**
Omit For Standard (No Slot)
**SL** With Slots

**SPRING REF**
See Entry Size Table
Omit If No Spring Required
**HE050, HE100, HE200, HE300, HE400**

# POLAMCO 91 Series Spring Adapters

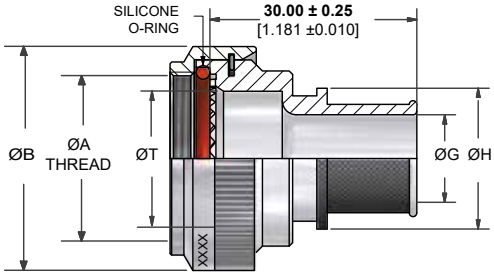


Angle 1: Straight

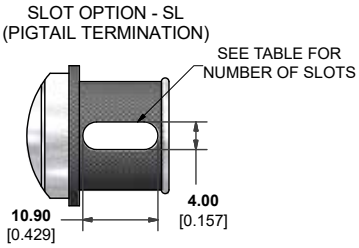


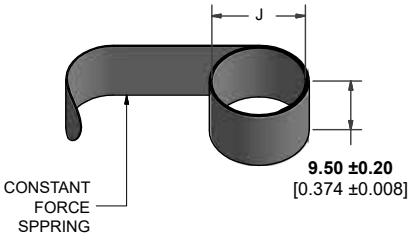


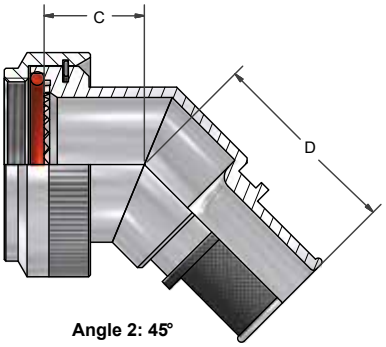


Angle 2: 45°

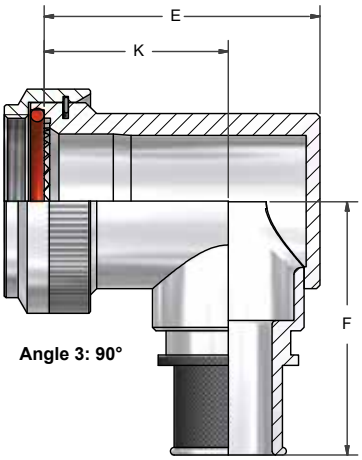


Angle 3: 90°

## 91F Series for 38999 Series I (Consult TE for Series II)

| Shell Size | A Thread (UNEF) | ØB Max. | ØT Min. | C ±0.5 (0.020) | D Max. | E Max. | F Max. | K ±0.5 (0.020) |
|---|---|---|---|---|---|---|---|---|
| **09** | 7/16-28 | **18.0**<br>0.709 | **6.8**<br>0.268 | **16.4**<br>0.646 | **25.7**<br>1.012 | **22.7**<br>0.894 | **30.5**<br>1.201 | **15.0**<br>0.591 |
| **11** | 9/16-24 | **21.0**<br>0.827 | **10.2**<br>0.402 | **17.2**<br>0.677 | **26.9**<br>1.059 | **26.2**<br>1.031 | **32.2**<br>1.268 | **17.0**<br>0.669 |
| **13** | 11/16-24 | **24.5**<br>0.965 | **13.1**<br>0.516 | **17.6**<br>0.693 | **27.3**<br>1.075 | **29.2**<br>1.150 | **33.7**<br>1.327 | **18.0**<br>0.709 |
| **15** | 13/16-20 | **27.8**<br>1.094 | **16.2**<br>0.638 | **18.5**<br>0.728 | **28.2**<br>1.110 | **32.2**<br>1.268 | **35.2**<br>1.386 | **20.0**<br>0.787 |
| **17** | 15/16-20 | **30.8**<br>1.213 | **19.3**<br>0.760 | **19.2**<br>0.756 | **29.0**<br>1.142 | **35.7**<br>1.406 | **36.9**<br>1.453 | **21.5**<br>0.846 |
| **19** | 1-1/16-18 | **34.1**<br>1.343 | **22.3**<br>0.878 | **19.6**<br>0.772 | **29.3**<br>1.154 | **39.7**<br>1.563 | **38.5**<br>1.516 | **23.0**<br>0.906 |
| **21** | 1-3/16-18 | **37.3**<br>1.469 | **25.8**<br>1.016 | **20.4**<br>0.803 | **30.1**<br>1.185 | **42.2**<br>1.661 | **41.1**<br>1.618 | **25.0**<br>0.984 |
| **23** | 1-5/16-18 | **41.0**<br>1.614 | **28.3**<br>1.114 | **20.8**<br>0.819 | **30.5**<br>1.201 | **45.2**<br>1.780 | **41.6**<br>1.638 | **26.0**<br>1.024 |
| **25** | 1-7/16-18 | **43.7**<br>1.720 | **31.5**<br>1.240 | **21.7**<br>0.854 | **31.4**<br>1.236 | **48.2**<br>1.898 | **43.1**<br>1.697 | **28.0**<br>1.102 |

**Millimeters** Inches

# POLAMCO 91 Series Spring Adapters

## 91H Series for 38999 Series III and IV

| Shell Size | A Thread | ØB Max. | ØT Min. | C ±0.5 (0.020) | D Max. | E Max. | F Max. | K ±0.5 (0.020) |
|---|---|---|---|---|---|---|---|---|
| **09** | M12 x 1.0 | **18.0**<br>0.709 | **6.7**<br>0.264 | **13.1**<br>0.516 | **25.7**<br>1.012 | **25.7**<br>1.012 | **30.5**<br>1.201 | **17.5**<br>0.689 |
| **11** | M15 x 1.0 | **21.0**<br>0.827 | **10.2**<br>0.402 | **13.9**<br>0.547 | **26.9**<br>1.059 | **26.7**<br>1.051 | **32.2**<br>1.268 | **17.5**<br>0.689 |
| **13** | M18 x 1.0 | **24.5**<br>0.965 | **13.5**<br>0.531 | **14.5**<br>0.571 | **27.3**<br>1.075 | **31.2**<br>1.228 | **33.7**<br>1.327 | **20.0**<br>0.787 |
| **15** | M22 x 1.0 | **29.0**<br>1.142 | **16.2**<br>0.638 | **15.5**<br>0.610 | **28.2**<br>1.110 | **37.2**<br>1.465 | **35.2**<br>1.386 | **24.5**<br>0.965 |
| **17** | M25 x 1.0 | **32.5**<br>1.280 | **19.4**<br>0.764 | **16.1**<br>0.634 | **29.0**<br>1.142 | **40.2**<br>1.583 | **36.9**<br>1.453 | **26.7**<br>1.051 |
| **19** | M28 x 1.0 | **35.5**<br>1.398 | **21.8**<br>0.858 | **16.8**<br>0.661 | **29.3**<br>1.154 | **44.7**<br>1.760 | **38.5**<br>1.516 | **27.0**<br>1.063 |
| **21** | M31 x 1.0 | **37.0**<br>1.457 | **25.1**<br>0.988 | **17.1**<br>0.673 | **30.1**<br>1.185 | **49.2**<br>1.937 | **40.1**<br>1.579 | **30.5**<br>1.201 |
| **23** | M34 x 1.0 | **40.0**<br>1.575 | **28.2**<br>1.110 | **17.7**<br>0.697 | **30.5**<br>1.201 | **51.7**<br>2.035 | **41.6**<br>1.638 | **31.5**<br>1.240 |
| **25** | M37 x 1.0 | **43.5**<br>1.713 | **31.4**<br>1.236 | **18.4**<br>0.724 | **31.4**<br>1.236 | **53.2**<br>2.094 | **43.1**<br>1.697 | **28.5**<br>1.122 |

**Millimeters** Inches

## Entry Size Dimensions

| Entry Size | ØG Min. | ØH Max. | No. Of Optional Slots | Spring Ref | J Max. (Uncon-strained) |
|---|---|---|---|---|---|
| **03** | **4.7**<br>0.185 | **13.9**<br>0.547 | 1 | HE050 | **7.5**<br>0.295 |
| **04** | **6.3**<br>0.248 | **13.9**<br>0.547 | 1 | | |
| **05** | **7.9**<br>0.311 | **15.5**<br>0.610 | 1 | HE100 | **9.1**<br>0.358 |
| **06** | **9.5**<br>0.374 | **17.2**<br>0.677 | 2 | | |
| **07** | **11.1**<br>0.437 | **18.7**<br>0.736 | 2 | | |
| **08** | **12.7**<br>0.500 | **20.3**<br>0.799 | 2 | HE200 | **12.8**<br>0.504 |
| **09** | **14.2**<br>0.559 | **21.9**<br>0.862 | 2 | | |
| **10** | **15.8**<br>0.622 | **23.5**<br>0.925 | 2 | | |
| **11** | **17.4**<br>0.685 | **25.1**<br>0.988 | 2 | | |

| Entry Size | ØG Min. | ØH Max. | No. Of Optional Slots | Spring Ref | J Max. (Uncon-strained) |
|---|---|---|---|---|---|
| **12** | **19.0**<br>0.748 | **26.7**<br>1.051 | 2 | HE300 | **17.9**<br>0.705 |
| **13** | **20.6**<br>0.811 | **28.3**<br>1.114 | 2 | | |
| **14** | **22.2**<br>0.874 | **29.9**<br>1.177 | 4 | | |
| **15** | **23.8**<br>0.937 | **31.5**<br>1.240 | 4 | | |
| **16** | **25.4**<br>1.000 | **33.1**<br>1.303 | 4 | | |
| **17** | **27.0**<br>1.063 | **34.7**<br>1.366 | 4 | HE400 | **21.8**<br>0.858 |
| **18** | **28.6**<br>1.126 | **36.3**<br>1.429 | 4 | | |
| **19** | **30.2**<br>1.189 | **37.9**<br>1.492 | 4 | | |
| **20** | **31.8**<br>1.252 | **39.5**<br>1.555 | 4 | | |
| **21** | **33.3**<br>1.311 | **41.1**<br>1.618 | 4 | | |
| **22** | **35.0**<br>1.378 | **42.7**<br>1.681 | 4 | | |
| **23** | **36.5**<br>1.437 | **44.3**<br>1.744 | 4 | | |
| **24** | **38.1**<br>1.500 | **45.9**<br>1.807 | 4 | | |

**Millimeters** Inches

## SAVE WEIGHT

- Lightweight open-frame cable clamp
- Backshell machined from solid aluminum to help maximize strength and reliability

## VERSATILE

- Interfaces with 38999 Series I, II, III and IV connectors
- Available in straight and 90° angle mounting configurations
- Variety of finishes available

# POLAMCO 96 Series Strain Relief Adapters

The 96 Series adapters provide stain relief in an open-frame cable clamp. The backshell is machined from solid aluminum alloy to support strength, reliability, and low weight.

### Part Numbering System

**96 F 1 - 16 - 1 - C**

**SERIES**
- **96** Strain Relief Adapter

**CONNECTOR INTERFACE**
- **F** 38999 Series I and II
- **H** 38999 Series III and IV

**ANGLE**
- **1** Straight
- **3** 90°

**DASH NUMBER (SHELL SIZE)**
**08** (09), **10** (11), **12** (13), **14** (15),
**16** (17), **18** (19), **20** (21), **22** (23), **24** (25)

**MATERIAL**
- **1** Aluminum Alloy

**FINISH**
- **C** Electroless Nickel
- **B** Cadmium Olive Drab over Electroless Nickel
- **G** Black Anodize, Sulphuric
- **ZB** Zinc Cobalt Olive Drab over Electroless Nickel
- **ZN** Zinc Nickel Black Passivate over Electroless Nickel

# POLAMCO 96 Series Strain Relief Adapters

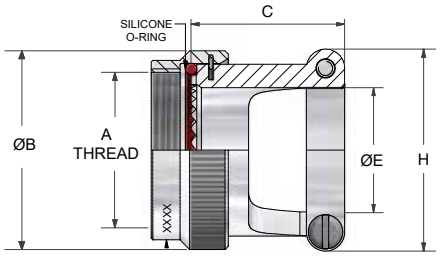


**Angle 1: Straight**

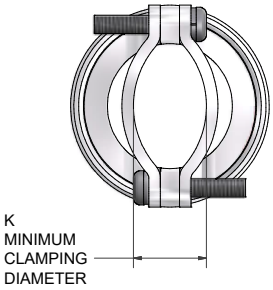


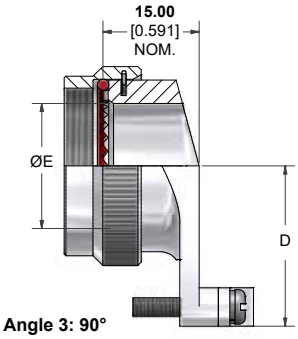


**Angle 3: 90°**

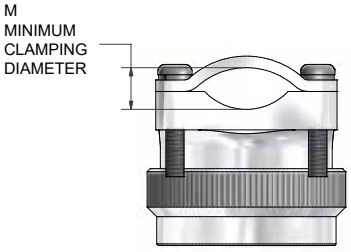

# POLAMCO 96 Series Strain Relief Adapters

## 96F Series for 38999 Series I and II

| Dash No. | Shell Size: Series I (Series II) | A Thread (UNEF) | ØB Max. | C Max. | D Max. | ØE Min. | H Max. | J Max. | K ±0.5 (0.020) Clamping Diameter | M ±0.5 (0.020) Clamping Diameter |
|---|---|---|---|---|---|---|---|---|---|---|
| **08** | 09 (08) | 7/16-28 | **18.3**<br>0.720 | **21.5**<br>0.846 | **18.8**<br>0.740 | **6.7**<br>0.264 | **19.0**<br>0.748 | **19.0**<br>0.748 | **5.7**<br>0.224 | **4.7**<br>0.185 |
| **10** | 11 (10) | 9/16-24 | **21.5**<br>0.846 | **21.5**<br>0.846 | **21.1**<br>0.831 | **10.1**<br>0.398 | **22.2**<br>0.874 | **22.2**<br>0.874 | **6.9**<br>0.272 | **5.3**<br>0.209 |
| **12** | 13 (12) | 11/16-24 | **24.5**<br>0.965 | **23.5**<br>0.925 | **23.1**<br>0.909 | **13.0**<br>0.512 | **25.2**<br>0.992 | **25.2**<br>0.992 | **8.5**<br>0.335 | **5.8**<br>0.228 |
| **14** | 15 (14) | 13/16-20 | **27.8**<br>1.094 | **23.5**<br>0.925 | **25.5**<br>1.004 | **16.1**<br>0.634 | **28.5**<br>1.122 | **28.5**<br>1.122 | **10.4**<br>0.409 | **7.7**<br>0.303 |
| **16** | 17 (16) | 15/16-20 | **30.8**<br>1.213 | **24.5**<br>0.965 | **29.1**<br>1.146 | **19.3**<br>0.760 | **31.7**<br>1.248 | **31.7**<br>1.248 | **11.4**<br>0.449 | **8.2**<br>0.323 |
| **18** | 19 (18) | 1-1/16-18 | **34.1**<br>1.343 | **27.5**<br>1.083 | **35.1**<br>1.382 | **21.8**<br>0.858 | **34.9**<br>1.374 | **34.9**<br>1.374 | **14.9**<br>0.587 | **9.7**<br>0.382 |
| **20** | 21 (20) | 1-3/16-18 | **37.3**<br>1.469 | **34.5**<br>1.358 | **37.7**<br>1.484 | **25.2**<br>0.992 | **38.0**<br>1.496 | **38.0**<br>1.496 | **16.8**<br>0.661 | **10.7**<br>0.421 |
| **22** | 23 (22) | 1-5/16-18 | **40.5**<br>1.594 | **34.5**<br>1.358 | **39.8**<br>1.567 | **28.1**<br>1.106 | **42.8**<br>1.685 | **41.2**<br>1.622 | **23.9**<br>0.941 | **11.8**<br>0.465 |
| **24** | 25 (24) | 1-7/16-18 | **43.7**<br>1.720 | **34.5**<br>1.358 | **42.0**<br>1.654 | **31.3**<br>1.232 | **46.0**<br>1.811 | **44.4**<br>1.740 | **22.8**<br>0.898 | **12.7**<br>0.500 |

**Millimeters** Inches

## 96H Series for 38999 Series III and IV

| Shell Size | A Thread | ØB Max. | C Max. | D Max. | ØE Min. | H Max. | J Max. | K ±0.5 Clamping Diameter | M ±0.5 Clamping Diameter |
|---|---|---|---|---|---|---|---|---|---|
| **09** | M12 x 1.0 | **18.0**<br>0.709 | **21.5**<br>0.846 | **20.4**<br>0.803 | **6.7**<br>0.264 | **19.0**<br>0.748 | **20.6**<br>0.811 | **5.7**<br>0.224 | **5.2**<br>0.205 |
| **11** | M15 x 1.0 | **21.0**<br>0.827 | **21.5**<br>0.846 | **21.4**<br>0.843 | **10.1**<br>0.398 | **22.2**<br>0.874 | **22.2**<br>0.874 | **6.9**<br>0.272 | **5.2**<br>0.205 |
| **13** | M18 x 1.0 | **24.5**<br>0.965 | **23.5**<br>0.846 | **22.4**<br>0.882 | **13.0**<br>0.512 | **25.2**<br>0.992 | **23.7**<br>0.933 | **8.5**<br>0.335 | **5.6**<br>0.220 |
| **15** | M22 x 1.0 | **27.5**<br>1.083 | **23.5**<br>0.925 | **23.4**<br>0.921 | **16.1**<br>0.634 | **28.5**<br>1.122 | **26.9**<br>1.059 | **10.4**<br>0.409 | **6.4**<br>0.252 |
| **17** | M25 x 1.0 | **31.0**<br>1.220 | **24.5**<br>0.925 | **25.4**<br>1.000 | **19.3**<br>0.760 | **31.7**<br>1.248 | **28.5**<br>1.122 | **11.4**<br>0.449 | **6.5**<br>0.256 |
| **19** | M28 x 1.0 | **34.0**<br>1.339 | **27.5**<br>0.965 | **27.9**<br>1.098 | **21.8**<br>0.858 | **34.9**<br>1.374 | **31.7**<br>1.248 | **14.9**<br>0.587 | **7.0**<br>0.276 |
| **21** | M31 x 1.0 | **37.0**<br>1.457 | **34.5**<br>1.083 | **31.9**<br>1.256 | **25.2**<br>0.992 | **38.0**<br>1.496 | **34.9**<br>1.374 | **16.8**<br>0.661 | **8.5**<br>0.335 |
| **23** | M34 x 1.0 | **40.0**<br>1.575 | **37.5**<br>1.358 | **35.4**<br>1.394 | **28.1**<br>1.106 | **42.8**<br>1.685 | **38.0**<br>1.496 | **23.9**<br>0.941 | **9.4**<br>0.370 |
| **25** | M37 x 1.0 | **43.5**<br>1.713 | **37.5**<br>1.476 | **36.4**<br>1.433 | **31.3**<br>1.232 | **46.0**<br>1.811 | **38.0**<br>1.496 | **22.8**<br>0.898 | **9.4**<br>0.370 |

**Millimeters** Inches

## HIGH PERFORMANCE

- Profile of backshell specifically designed to help optimize performance with heat shrink boot
- Optional heat-shrink boot available to help provide strain relief
- Alternative to M85049/62

## VERSATILE

- Interfaces with 38999 Series I, II, III and IV connectors
- Available in straight, 45°, and 90° angle mounting configurations
- Variety of finishes available
- Standard range - many sizes available from stock

# POLAMCO 97 Series Heat-Shrink Boot Adapters

The 97 Series adapters are designed to help provide high performance when used with an optional heat-shrink boot to provide strain relief. Many shell sizes are available from stock, providing an easy alternative to M85049/62 backshells.

### Part Numbering System

**97 F 1 - 17 - 1 - C**

**SERIES**
- **97** Heat-Shrink Boot Adapter

**CONNECTOR INTERFACE**
- **F** 38999 Series I and II
- **H** 38999 Series III and IV

**ANGLE**
- **1** Straight
- **2** 45°
- **3** 90°

**SHELL SIZE**
- **09, 11, 13, 15, 17, 19, 21, 23, 25**

**ENTRY SIZE**
- See Entry Size Table

**MATERIAL**
- **1** Aluminum Alloy

**FINISH**
- **C** Electroless Nickel
- **B** Cadmium Olive Drab over Electroless Nickel
- **G** Black Anodize, Sulphuric
- **ZB** Zinc Cobalt Olive Drab over Electroless Nickel
- **ZN** Zinc Nickel Black Passivate over Electroless Nickel

# POLAMCO 97 Series Heat-Shrink Boot Adapters

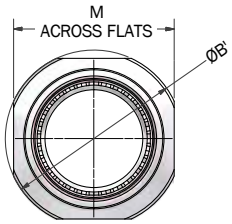


-FN OPTION

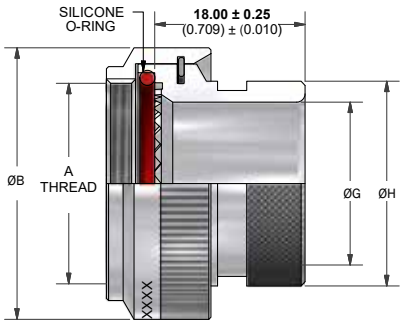


Angle 1: Straight

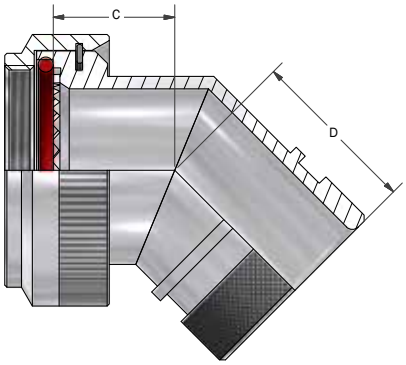


Angle 2: 45°

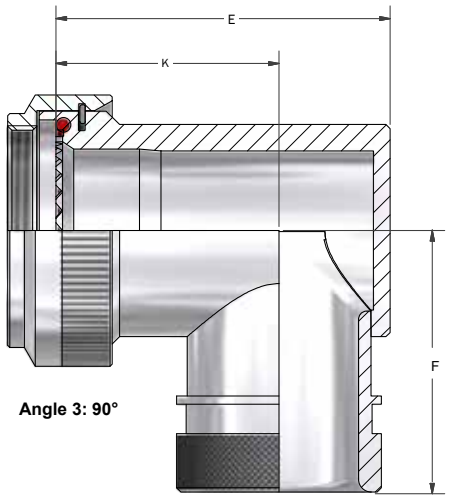


Angle 3: 90°

## 97F Series for 38999 Series I (Consult TE for Series II)

| Shell Size | A Thread | ØB Max. | ØG Max. | ØH Max. | C ±0.5 | D Max. | E Max. | F Max. | K ±0.5 (0.020) | Recommended Boot Size |
|---|---|---|---|---|---|---|---|---|---|---|
| **09** | 7/16-28 | **18.0**<br>0.709 | **6.8**<br>0.268 | **13.5**<br>0.531 | **16.4**<br>0.646 | **17.6**<br>0.693 | **22.7**<br>0.894 | **25.5**<br>1.004 | **15.0**<br>0.591 | 202K121 |
| **11** | 9/16-24 | **21.0**<br>0.827 | **10.2**<br>0.402 | **15.4**<br>0.606 | **17.2**<br>0.677 | **18.4**<br>0.724 | **26.2**<br>1.031 | **27.3**<br>1.075 | **17.0**<br>0.669 | 202K121 |
| **13** | 11/16-24 | **24.5**<br>0.965 | **13.1**<br>0.516 | **19.7**<br>0.776 | **17.6**<br>0.693 | **19.3**<br>0.760 | **29.2**<br>1.150 | **28.7**<br>1.130 | **18.0**<br>0.709 | 202K142 |
| **15** | 13/16-20 | **27.8**<br>1.094 | **16.2**<br>0.638 | **21.3**<br>0.839 | **18.5**<br>0.728 | **19.6**<br>0.772 | **32.2**<br>1.268 | **30.2**<br>1.189 | **20.0**<br>0.787 | 202K142 |
| **17** | 15/16-20 | **30.8**<br>1.213 | **19.3**<br>0.760 | **24.5**<br>0.965 | **19.2**<br>0.756 | **20.4**<br>0.803 | **35.7**<br>1.406 | **31.9**<br>1.256 | **21.5**<br>0.846 | 202K153 |
| **19** | 1-1/16-18 | **34.1**<br>1.343 | **22.3**<br>0.878 | **26.5**<br>1.043 | **19.6**<br>0.772 | **20.8**<br>0.819 | **39.7**<br>1.563 | **33.5**<br>1.319 | **23.0**<br>0.906 | 202K153 |
| **21** | 1-3/16-18 | **37.3**<br>1.469 | **25.8**<br>1.016 | **31.0**<br>1.220 | **20.4**<br>0.803 | **21.6**<br>0.850 | **42.2**<br>1.661 | **35.1**<br>1.382 | **25.0**<br>0.984 | 202K153 |
| **23** | 1-5/16-18 | **41.0**<br>1.614 | **28.3**<br>1.114 | **34.4**<br>1.354 | **20.8**<br>0.819 | **22.5**<br>0.886 | **45.2**<br>1.780 | **36.7**<br>1.445 | **26.0**<br>1.024 | 202K163 |
| **25** | 1-7/16-18 | **43.7**<br>1.720 | **31.5**<br>1.240 | **36.6**<br>1.441 | **21.7**<br>0.854 | **22.9**<br>0.902 | **48.2**<br>1.898 | **38.1**<br>1.500 | **28.0**<br>1.102 | 202K163 |

**Millimeters** Inches

# POLAMCO 97 Series Heat-Shrink Boot Adapters

## 97H Series for 38999 Series III and IV

| Shell Size | A Thread | ØB Max. | ØB' Max. | ØG Max. | ØH Max. | C ±0.5 | D Max. | E Max. | F Max. | K ±0.5 (0.020) | Recommended Boot Size | M |
|---|---|---|---|---|---|---|---|---|---|---|---|---|
| **09** | M12 x 1.0 | **18.0**<br>0.709 | **20.30**<br>0.799 | **6.8**<br>0.268 | **13.5**<br>0.531 | **13.1**<br>0.516 | **17.6**<br>0.693 | **25.7**<br>1.012 | **25.5**<br>1.004 | **17.5**<br>0.689 | 202K121 | **17.00**<br>0.669 |
| **11** | M15 x 1.0 | **21.0**<br>0.827 | **23.70**<br>0.933 | **9.9**<br>0.390 | **15.4**<br>0.606 | **13.9**<br>0.547 | **18.4**<br>0.724 | **26.7**<br>1.051 | **27.3**<br>1.075 | **17.5**<br>0.689 | 202K121 | **30.40**<br>1.197 |
| **13** | M18 x 1.0 | **24.5**<br>0.965 | **27.15**<br>1.069 | **13.6**<br>0.535 | **19.7**<br>0.776 | **14.5**<br>0.571 | **19.3**<br>0.760 | **31.2**<br>1.228 | **28.7**<br>1.130 | **20.0**<br>0.787 | 202K142 | **23.85**<br>0.939 |
| **15** | M22 x 1.0 | **29.0**<br>1.142 | **32.05**<br>1.262 | **15.9**<br>0.626 | **21.3**<br>0.839 | **15.5**<br>0.610 | **19.6**<br>0.772 | **37.2**<br>1.465 | **30.2**<br>1.189 | **24.5**<br>0.965 | 202K142 | **28.75**<br>1.132 |
| **17** | M25 x 1.0 | **32.5**<br>1.280 | **35.35**<br>1.392 | **18.9**<br>0.744 | **24.5**<br>0.965 | **16.1**<br>0.634 | **20.4**<br>0.803 | **40.2**<br>1.583 | **31.9**<br>1.256 | **26.7**<br>1.051 | 202K153 | **32.05**<br>1.262 |
| **19** | M28 x 1.0 | **35.5**<br>1.398 | **38.55**<br>1.518 | **21.9**<br>0.862 | **26.5**<br>1.043 | **16.8**<br>0.661 | **20.8**<br>0.819 | **44.7**<br>1.760 | **33.5**<br>1.319 | **27.0**<br>1.063 | 202K153 | **35.25**<br>1.388 |
| **21** | M31 x 1.0 | **37.0**<br>1.457 | **39.85**<br>1.569 | **25.2**<br>0.992 | **31.0**<br>1.220 | **17.1**<br>0.673 | **21.6**<br>0.850 | **49.2**<br>1.937 | **35.1**<br>1.382 | **30.5**<br>1.201 | 202K153 | **36.55**<br>1.439 |
| **23** | M34 x 1.0 | **40.0**<br>1.575 | **42.95**<br>1.691 | **27.4**<br>1.079 | **34.4**<br>1.354 | **17.7**<br>0.697 | **22.5**<br>0.886 | **51.7**<br>2.035 | **36.7**<br>1.445 | **31.5**<br>1.240 | 202K163 | **39.65**<br>1.561 |
| **25** | M37 x 1.0 | **43.5**<br>1.713 | **46.12**<br>1.816 | **30.4**<br>1.197 | **36.6**<br>1.441 | **18.4**<br>0.724 | **22.9**<br>0.902 | **53.2**<br>2.094 | **38.1**<br>1.500 | **28.5**<br>1.122 | 202K163 | **42.82**<br>1.686 |

**Millimeters** Inches

## Entry Size Dimensions

| Entry Size | ØG Min. | ØH Max. | No. Of Optional Slots |
|---|---|---|---|
| **03** | **4.7**<br>0.185 | **13.9**<br>0.547 | 1 |
| **04** | **6.3**<br>0.248 | **13.9**<br>0.547 | 1 |
| **05** | **7.9**<br>0.311 | **15.5**<br>0.610 | 1 |
| **06** | **9.5**<br>0.374 | **17.2**<br>0.677 | 2 |
| **07** | **11.1**<br>0.437 | **18.7**<br>0.736 | 2 |
| **08** | **12.7**<br>0.500 | **20.3**<br>0.799 | 2 |
| **09** | **14.2**<br>0.559 | **21.9**<br>0.862 | 2 |
| **10** | **15.8**<br>0.622 | **23.5**<br>0.925 | 2 |
| **11** | **17.4**<br>0.685 | **25.1**<br>0.988 | 2 |
| **12** | **19.0**<br>0.748 | **26.7**<br>1.051 | 2 |
| **13** | **20.6**<br>0.811 | **28.3**<br>1.114 | 2 |

**Millimeters** Inches

| Entry Size | ØG Min. | ØH Max. | No. Of Optional Slots |
|---|---|---|---|
| **14** | **22.2**<br>0.874 | **29.9**<br>1.177 | 4 |
| **15** | **23.8**<br>0.937 | **31.5**<br>1.240 | 4 |
| **16** | **25.4**<br>1.000 | **33.1**<br>1.303 | 4 |
| **17** | **27.0**<br>1.063 | **34.7**<br>1.366 | 4 |
| **18** | **28.6**<br>1.126 | **36.3**<br>1.429 | 4 |
| **19** | **30.2**<br>1.189 | **37.9**<br>1.492 | 4 |
| **20** | **31.8**<br>1.252 | **39.5**<br>1.555 | 4 |
| **21** | **33.3**<br>1.311 | **41.1**<br>1.618 | 4 |
| **22** | **35.0**<br>1.378 | **42.7**<br>1.681 | 4 |
| **23** | **36.5**<br>1.437 | **44.3**<br>1.744 | 4 |
| **24** | **38.1**<br>1.500 | **45.9**<br>1.807 | 4 |

**Millimeters** Inches

## HIGH PERFORMANCE

- Mesh tape bundle creates windowless EMI barrier, even without overall screen braid
- 360° termination of multiple or individual screens
- Optional heat-shrink boot available for sealing and strain relief

## EASY TO USE

- Tool-free termination
- Reworkable

# KMA Series Mesh Tape Backshells

The KMA Series backshells are a mesh tape bundle system that creates a windowless EMI barrier, even without overall screen braid by using 360° termination of multiple individual screens.

### Part Numbering System

**KMA F 1 - 17 - 1 - C - S1 - HE**

**SERIES**
- **KMA** Mesh Tape Backshell

**CONNECTOR INTERFACE**
- **F** 38999 Series I and II
- **H** 38999 Series III and IV

**ANGLE**
- **1** Straight
- **2** 45°
- **3** 90°

**SHELL SIZE**
- **09, 11, 13, 15, 17, 19, 21, 23, 25**

**MATERIAL**
- **1** Aluminum Alloy

**FINISH**
- **C** Electroless Nickel
- **B** Cadmium Olive Drab over Electroless Nickel
- **ZB** Zinc Cobalt Olive Drab over Electroless Nickel
- **ZN** Zinc Nickel Black Passivate over Electroless Nickel

**SLOT OPTION**
- **S1** 12 mm (0.472") Width
- **S2** 20 mm (0.787") Width

**TERMINATION OPTION**
- **HE** Constant-Force Spring
- Omit For Supplied Without Spring

# KMA Series Mesh Tape Backshells

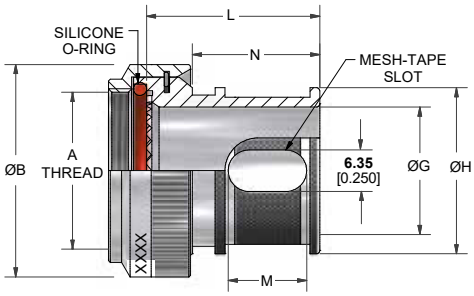


Angle A: Straight

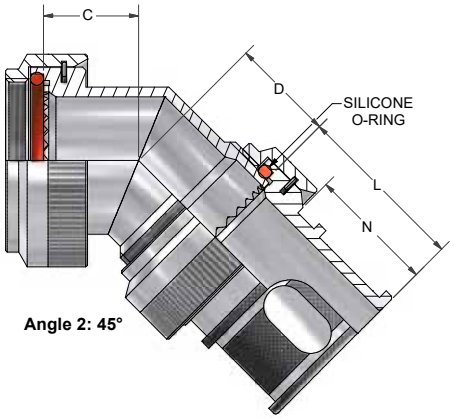


Angle 2: 45°

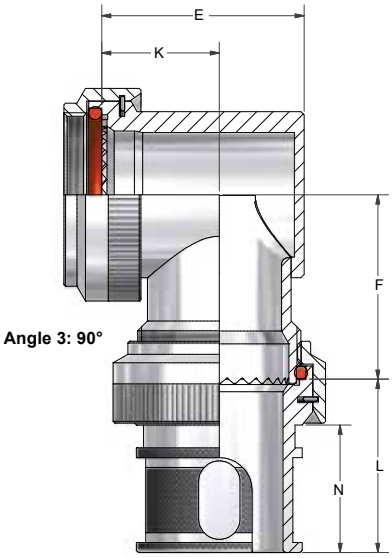


Angle 3: 90°

## KMAF Series for 38999 Series I (Consult TE for Series II)

| Shell Size | A Thread (UNEF) | ØB Max. | C Max. | D Max. | E Max. | F Max. | K ±0.5 (0.020) | ØG Min. | ØH Max. |
|---|---|---|---|---|---|---|---|---|---|
| **09** | 7/16-28 | **18.0** 0.709 | **12.5** 0.492 | **14.5** 0.571 | **20.0** 0.787 | **21.5** 0.846 | **13.7** 0.539 | **6.8** 0.268 | **13.2** 0.520 |
| **11** | 9/16-24 | **21.0** 0.827 | **13.0** 0.512 | **15.0** 0.591 | **23.0** 0.906 | **23.0** 0.906 | **14.7** 0.579 | **10.2** 0.402 | **16.7** 0.657 |
| **13** | 11/16-24 | **24.5** 0.965 | **13.6** 0.535 | **15.5** 0.610 | **27.0** 1.063 | **24.5** 0.965 | **17.2** 0.677 | **13.1** 0.516 | **20.0** 0.787 |
| **15** | 13/16-20 | **27.8** 1.094 | **14.0** 0.551 | **16.0** 0.630 | **28.0** 1.102 | **28.5** 1.122 | **16.7** 0.657 | **16.2** 0.638 | **22.7** 0.894 |
| **17** | 15/16-20 | **30.8** 1.213 | **15.0** 0.591 | **17.0** 0.669 | **31.0** 1.220 | **30.0** 1.181 | **18.2** 0.717 | **19.3** 0.760 | **25.4** 1.000 |
| **19** | 1-1/16-18 | **34.1** 1.343 | **16.0** 0.630 | **18.0** 0.709 | **36.0** 1.417 | **31.5** 1.240 | **21.2** 0.835 | **22.3** 0.878 | **28.3** 1.114 |
| **21** | 1-3/16-18 | **37.3** 1.469 | **16.6** 0.654 | **18.5** 0.728 | **39.0** 1.535 | **33.0** 1.299 | **22.2** 0.874 | **25.8** 1.016 | **31.6** 1.244 |
| **23** | 1-5/16-18 | **41.0** 1.614 | **17.0** 0.669 | **19.0** 0.748 | **41.0** 1.614 | **34.5** 1.358 | **23.2** 0.913 | **28.3** 1.114 | **34.7** 1.366 |
| **25** | 1-7/16-18 | **43.7** 1.720 | **17.4** 0.685 | **19.5** 0.768 | **47.0** 1.850 | **36.0** 1.417 | **27.7** 1.091 | **31.5** 1.240 | **37.9** 1.492 |

**Millimeters** Inches

# KMA Series Mesh Tape Backshells

## KMAH Series for 38999 Series III and IV

| Shell Size | A Thread | ØB Max. | C Max. | D Max. | E Max. | F Max. | K ±0.5 (0.020) | ØG Min. | ØH Max. |
|---|---|---|---|---|---|---|---|---|---|
| **09** | M12 x 1.0 | **18.0**<br>0.709 | **12.5**<br>0.492 | **14.5**<br>0.571 | **20.0**<br>0.787 | **21.5**<br>0.846 | **13.5**<br>0.531 | **6.8**<br>0.268 | **13.2**<br>0.520 |
| **11** | M15 x 1.0 | **21.0**<br>0.827 | **13.0**<br>0.512 | **15.0**<br>0.591 | **23.0**<br>0.906 | **23.0**<br>0.906 | **14.5**<br>0.571 | **10.3**<br>0.406 | **16.7**<br>0.657 |
| **13** | M18 x 1.0 | **24.5**<br>0.965 | **13.6**<br>0.535 | **15.5**<br>0.610 | **27.0**<br>1.063 | **24.5**<br>0.965 | **17.0**<br>0.669 | **13.6**<br>0.535 | **20.0**<br>0.787 |
| **15** | M22 x 1.0 | **29.0**<br>1.142 | **14.0**<br>0.551 | **16.0**<br>0.630 | **28.0**<br>1.102 | **28.5**<br>1.122 | **16.5**<br>0.650 | **16.3**<br>0.642 | **22.7**<br>0.894 |
| **17** | M25 x 1.0 | **32.5**<br>1.280 | **15.0**<br>0.591 | **17.0**<br>0.669 | **31.0**<br>1.220 | **30.0**<br>1.181 | **18.0**<br>0.709 | **19.5**<br>0.768 | **25.4**<br>1.000 |
| **19** | M28 x 1.0 | **35.5**<br>1.398 | **16.0**<br>0.630 | **18.0**<br>0.709 | **36.0**<br>1.417 | **31.5**<br>1.240 | **21.0**<br>0.827 | **21.9**<br>0.862 | **28.3**<br>1.114 |
| **21** | M31 x 1.0 | **37.0**<br>1.457 | **16.6**<br>0.654 | **18.5**<br>0.728 | **39.0**<br>1.535 | **33.0**<br>1.299 | **22.0**<br>0.866 | **25.2**<br>0.992 | **31.6**<br>1.244 |
| **23** | M34x1.0 | **40.0**<br>1.575 | **17.0**<br>0.669 | **19.0**<br>0.748 | **41.0**<br>1.614 | **34.5**<br>1.358 | **23.0**<br>0.906 | **28.3**<br>1.114 | **34.7**<br>1.366 |
| **25** | M37x1.0 | **43.5**<br>1.713 | **17.4**<br>0.685 | **19.5**<br>0.768 | **47.0**<br>1.850 | **36.0**<br>1.417 | **27.5**<br>1.083 | **31.5**<br>1.240 | **37.9**<br>1.492 |

**Millimeters** Inches

## INDUSTRY STANDARD

- Meets AS85049 NAVAIR standards

## RELIABLE

- Self-coupling locking nut provides excellent mechanical protection against loosening under vibration
- Corrosion resistant stainless steel

## EASY TO USE

- Band straps available flat for side entry or precoiled for end entry
- Side-entry band straps allow easier installation and repair

## VERSATILE

- Three band strap widths

# Raychem AS85049 Band Straps

The AS85049 industry standard is used on most military circular connectors, including M38999. The band strap termination system provides ease of installation and repair. TE offers the corrosion-resisting steel bands in three styles to help meet your shield termination needs and termination tool of your choice.

## APPLICATION TOOLING

- M85049/128-7 & 8 AS81306/1-02
- M85049/128-3 & 4 AS81306/1-01
- M85049/128-1 & 2 AS81306/2-01

## Part Numbering System

**M85049/128 - X**

### CONFIGURATION

**1** Flat, 6.22 (0.245) Width
**2** Precoiled, 6.22 (0.245) Width
**3** Flat, 6.35 (0.250) Width
**4** Precoiled, , 6.35 (0.250) Width
**7** Flat, 3.05 (0.120) Width
**8** Precoiled, 3.05 (0.120) Width

# Raychem AS85049 Band Straps

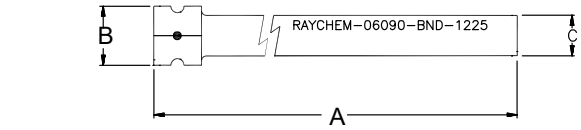

**FIGURE 1**
**CONFIGURATION 1**
**FLAT**

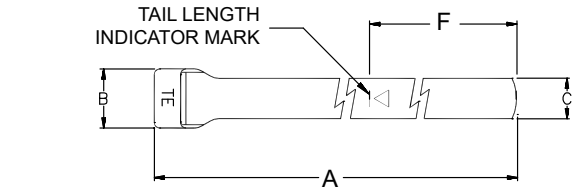


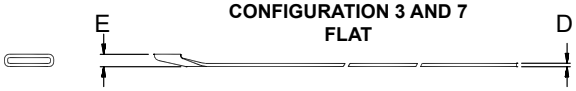


**FIGURE 3**
**CONFIGURATION 3 AND 7**
**FLAT**

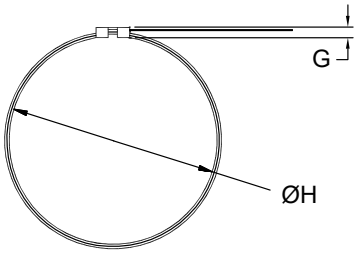


**FIGURE 2**
**CONFIGURATION 2**
**PRECOILED**

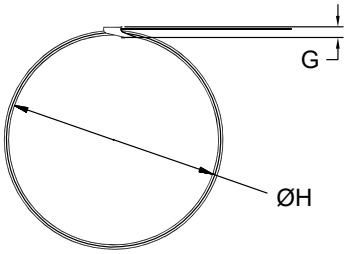


**FIGURE 4**
**CONFIGURATION 4 AND 8**
**PRECOILED**

## Configurations and Dimensions

| Configuration | Figure | A± 1.52 (.060) | B± 0.79 (.031) | C± 0.25 (.010) | D Ref. | E Ref. | F Ref. | G Max. | H Ref. |
|---|---|---|---|---|---|---|---|---|---|
| 1 | 1 | **355.6**<br>14.0 | **8.33**<br>0.328 | **6.22**<br>0.245 | **0.48**<br>0.019 | **2.54**<br>0.100 | — | — | — |
| 2 | 2 | — | — | — | — | — | — | **3.56**<br>0.140 | **44.46**<br>1.750 |
| 3 | 3 | **362.10**<br>14.526 | **8.89**<br>0.350 | **6.35**<br>0.250 | **0.51**<br>0.020 | **3.30**<br>0.130 | **51.59**<br>2.031 | — | — |
| 4 | 4 | — | — | — | — | — | — | **3.81**<br>0.150 | **44.45**<br>1.750 |
| 7 | 3 | **206.38**<br>8.125 | **4.95**<br>0.195 | **3.05**<br>0.120 | **0.38**<br>0.015 | **1.35**<br>0.053 | **51.59**<br>2.031 | — | — |
| 8 | 4 | — | — | — | — | — | — | **1.85**<br>0.073 | **21.8**<br>0.860 |

**Millimeters** Inches

## INDUSTRY STANDARD

- Meets AS85049 NAVAIR standards
- Terminates a shielded cable

## RELIABLE

- Detented self-locking coupling nut with audible click
- Sealed adapter-to-connector interface
- Accepts lipped heat-shrinkable boots

## VERSATILE

- Straight, 45°, and 90° configurations
- Cadmium, electroless nickel, or black zinc nickel plating

## APPLICATIONS

- Aerospace
- Marine
- Military Ground Vehicles
- Space-Based Systems

# Raychem AS85049 Adapters and Bandstraps

Meeting NAVAIR requirements, Raychem AS85049 adapters help provide a reliable termination of shielded cables. The detented self-locking coupling nut helps provide mechanical protection against loosening under vibration and provides audible indication of proper engagement.

## MATERIALS

- **Adapters:** Aluminum
- **Plating:** Olive drab cadmium, electroless nickel, or black zinc nickel

## Part Numbering System

**M85049/ 88 13 - 15 Z 02**

### PRODUCT DESIGNATOR
**M85049** AS85049 Adapters

### SPECIFICATION SHEET
**D38999 Series I and II**
**85** Straight Adapter
**86** 90° Adapter
**87** 45° Adapter

**D38999 Series I and II**
**88** Straight Adapter
**89** 90° Adapter
**90** 45° Adapter

### CONFIGURATION
Use dash for detented self-locking
Omit otherwise

### SHELL SIZE
**09, 11, 13, 15, 17, 19, 21, 23, 25**

### FINISH
**W** Cadmium
**N** Nickel
**Z** Black Zinc Nickel

### ENTRY SIZE
**02** Small
**03** Large

# Raychem AS85049 Adapters and Bandstraps

## Straight Adapters
## AS85049/85 Adapters for 38999 Series I and II
## AS85049/88 Adapters for 38999 Series III and IV

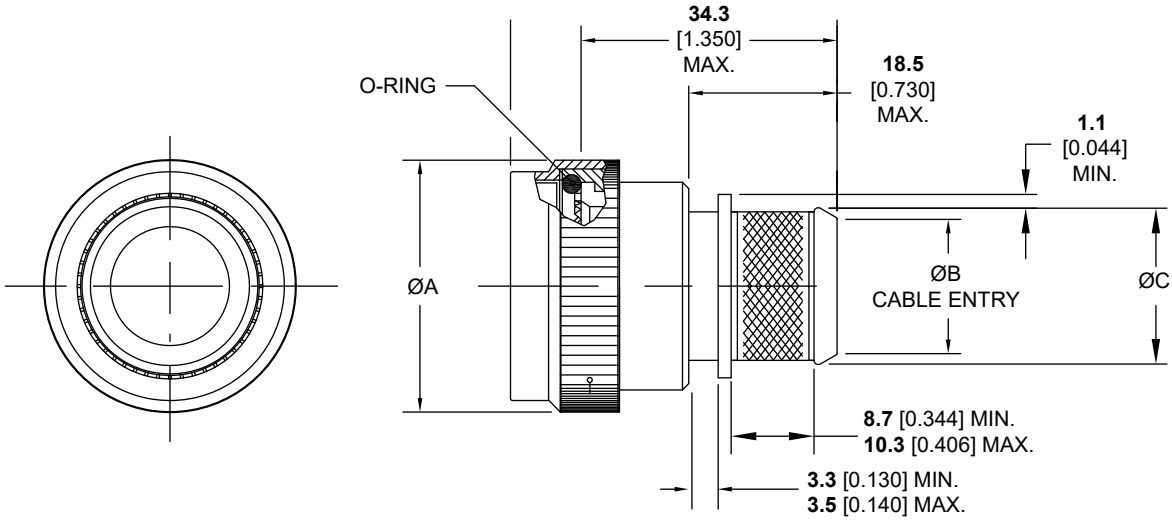


| Shell Size | | A Dia. Max. | B Dia. ±.010 | | C Dia. Ref | |
|---|---|---|---|---|---|---|
| | | | 02 | 03 | 02 | 03 |
| **9** | A | **21.8**<br>0.858 | N/A | **6.4**<br>0.250 | N/A | **10.0**<br>0.395 |
| **11** | B | **25.0**<br>0.984 | N/A | **7.9**<br>0.312 | N/A | **11.6**<br>0.457 |
| **13** | C | **29.4**<br>1.157 | **7.9**<br>0.312 | **11.1**<br>0.438 | **11.6**<br>0.457 | **14.8**<br>0.583 |
| **15** | D | **32.5**<br>1.279 | **11.1**<br>0.438 | **14.3**<br>0.562 | **14.8**<br>0.583 | **18.0**<br>0.707 |
| **17** | E | **35.7**<br>1.406 | **12.7**<br>0.500 | **15.9**<br>0.625 | **16.4**<br>0.645 | **19.6**<br>0.770 |
| **19** | F | **38.5**<br>1.516 | **15.9**<br>0.625 | **19.1**<br>0.750 | **19.6**<br>0.770 | **22.7**<br>0.895 |
| **21** | G | **41.7**<br>1.642 | **15.9**<br>0.625 | **20.6**<br>0.812 | **19.6**<br>0.770 | **24.3**<br>0.957 |
| **23** | H | **44.9**<br>1.768 | **17.5**<br>0.688 | **23.8**<br>0.938 | **21.1**<br>0.829 | **27.5**<br>1.083 |
| **25** | J | **48.0**<br>1.889 | **19.1**<br>0.750 | **25.4**<br>1.000 | **22.7**<br>0.895 | **29.1**<br>1.145 |

**Millimeters** Inches

# Raychem AS85049 Adapters and Bandstraps

## 45° Adapters
## AS85049/86 Adapters for 38999 Series I and II
## AS85049/89 Adapters for 38999 Series III and IV

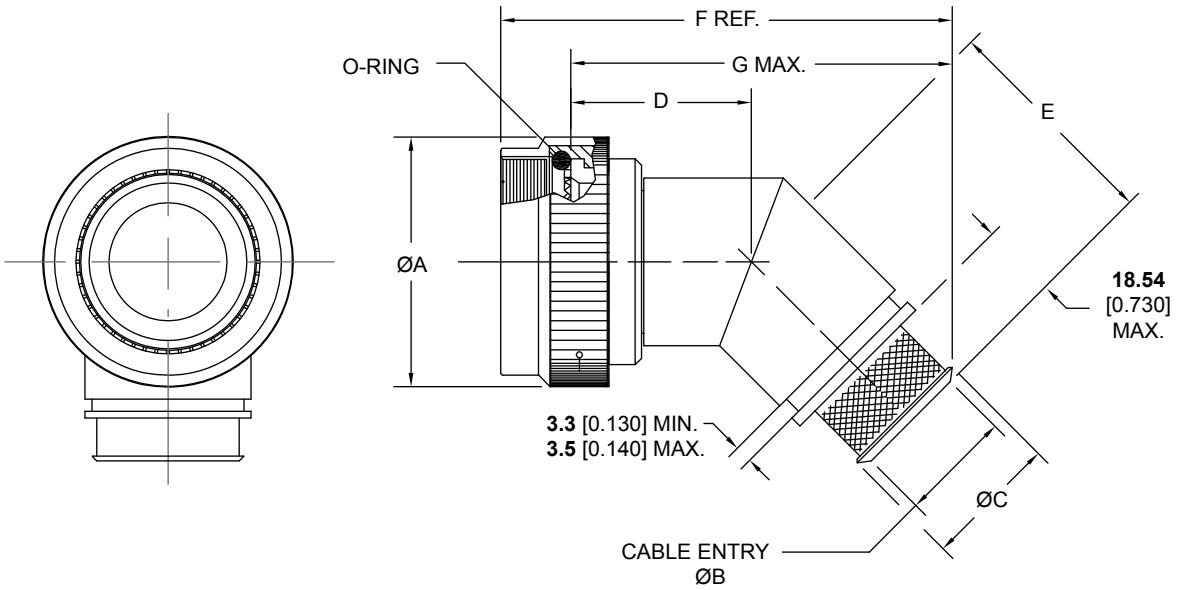


| Shell Size | | A Dia. Max. | B Dia. ±.010 | | C Dia. Ref | | D | E | F Ref. | | G Max. | |
|---|---|---|---|---|---|---|---|---|---|---|---|---|
| | | | 02 | 03 | 02 | 03 | | | 02 | 03 | 02 | 03 |
| **9** | A | **21.8**<br>0.858 | N/A | **6.4**<br>0.250 | N/A | **10.0**<br>0.395 | **25.7**<br>1.01 | **29.5**<br>1.16 | N/A | **56.3**<br>2.22 | N/A | **50.0**<br>1.97 |
| **11** | B | **25.0**<br>0.984 | N/A | **7.9**<br>0.312 | N/A | **11.6**<br>0.457 | **26.2**<br>1.03 | **30.2**<br>1.19 | N/A | **57.9**<br>2.28 | N/A | **51.6**<br>2.03 |
| **13** | C | **29.4**<br>1.157 | **7.9**<br>0.312 | **11.1**<br>0.438 | **11.6**<br>0.457 | **14.8**<br>0.583 | **26.9**<br>1.06 | **30.7**<br>1.21 | **59.1**<br>2.33 | **60.2**<br>2.37 | **52.8**<br>2.08 | **53.9**<br>2.12 |
| **15** | D | **32.5**<br>1.279 | **11.1**<br>0.438 | **14.3**<br>0.562 | **14.8**<br>0.583 | **18.0**<br>0.707 | **27.4**<br>1.08 | **31.5**<br>1.24 | **61.2**<br>2.41 | **62.4**<br>2.46 | **54.9**<br>2.16 | **56.1**<br>2.21 |
| **17** | E | **35.7**<br>1.406 | **12.7**<br>0.500 | **15.9**<br>0.625 | **16.4**<br>0.645 | **19.6**<br>0.770 | **28.2**<br>1.11 | **32.0**<br>1.26 | **62.9**<br>2.48 | **64.0**<br>2.52 | **56.6**<br>2.23 | **57.7**<br>2.27 |
| **19** | F | **38.5**<br>1.516 | **15.9**<br>0.625 | **19.1**<br>0.750 | **19.6**<br>0.770 | **22.7**<br>0.895 | **28.4**<br>1.12 | **32.3**<br>1.27 | **64.5**<br>2.54 | **65.6**<br>2.58 | **58.2**<br>2.29 | **59.3**<br>2.33 |
| **21** | G | **41.7**<br>1.642 | **15.9**<br>0.625 | **20.6**<br>0.812 | **19.6**<br>0.770 | **24.3**<br>0.957 | **29.2**<br>1.15 | **33.0**<br>1.30 | **65.8**<br>2.59 | **67.5**<br>2.66 | **59.5**<br>2.34 | **61.2**<br>2.41 |
| **23** | H | **44.9**<br>1.768 | **17.5**<br>0.688 | **23.8**<br>0.938 | **21.1**<br>0.829 | **27.5**<br>1.083 | **29.7**<br>1.17 | **33.8**<br>1.33 | **67.4**<br>2.65 | **69.6**<br>2.74 | **61.1**<br>2.40 | **63.3**<br>2.49 |
| **25** | J | 48.0<br>1.889 | **19.1**<br>0.750 | **25.4**<br>1.000 | **22.7**<br>0.895 | **29.1**<br>1.145 | **30.5**<br>1.20 | **34.3**<br>1.35 | **69.1**<br>2.72 | **71.3**<br>2.81 | **62.8**<br>2.47 | **65.0**<br>2.56 |

**Millimeters** Inches

# Raychem AS85049 Adapters and Bandstraps

## 90° Adapters
## AS85049/87 Adapters for 38999 Series I and II
## AS85049/90 Adapters for 38999 Series III and IV

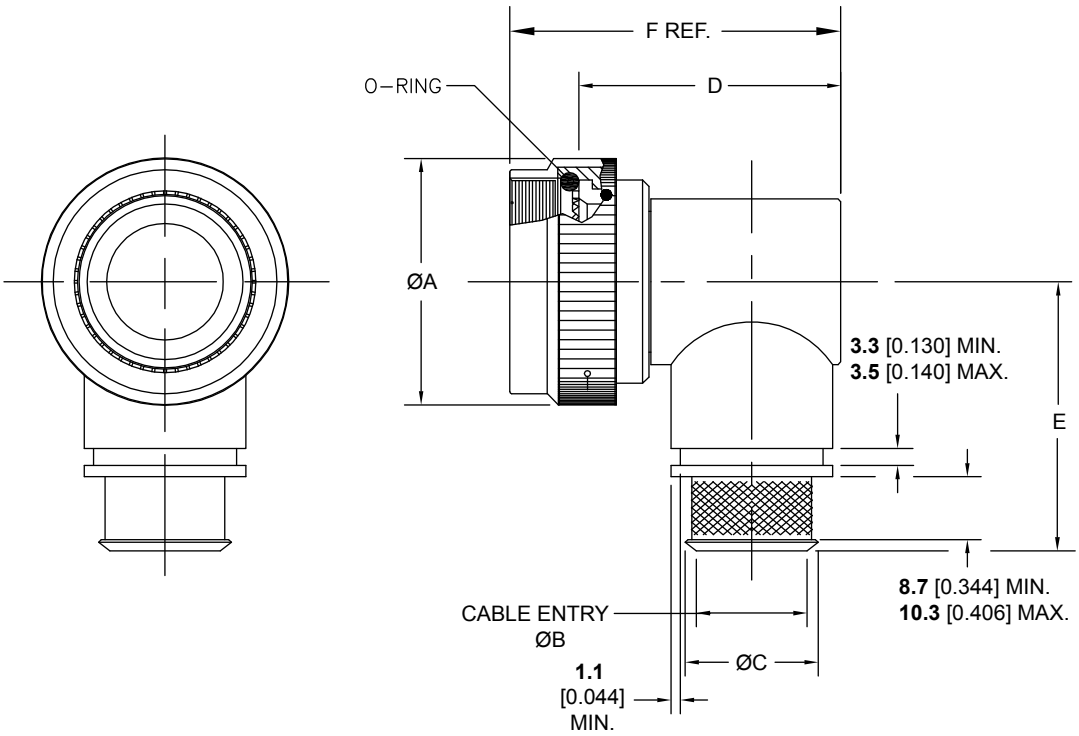


| Shell Size | | A Dia. Max. | B Dia. ±.010 | | C Dia. Ref | | D | E | F Ref. |
|---|---|---|---|---|---|---|---|---|---|
| | | | 02 | 03 | 02 | 03 | | | |
| **9** | A | **21.8** 0.858 | N/A | **6.4** 0.250 | N/A | **10.0** 0.395 | **34.9** 1.375 | **36.0** 1.417 | **41.2** 1.623 |
| **11** | B | **25.0** 0.984 | N/A | **7.9** 0.312 | N/A | **11.6** 0.457 | **36.5** 1.437 | **37.6** 1.480 | **42.8** 1.685 |
| **13** | C | **29.4** 1.157 | **7.9** 0.312 | **11.1** 0.438 | **11.6** 0.457 | **14.8** 0.583 | **39.7** 1.562 | **39.4** 1.553 | **46.0** 1.810 |
| **15** | D | **32.5** 1.279 | **11.1** 0.438 | **14.3** 0.562 | **14.8** 0.583 | **18.0** 0.707 | **42.8** 1.687 | **41.0** 1.614 | **49.1** 1.935 |
| **17** | E | **35.7** 1.406 | **12.7** 0.500 | **15.9** 0.625 | **16.4** 0.645 | **19.6** 0.770 | **44.4** 1.750 | **42.6** 1.678 | **50.8** 1.998 |
| **19** | F | **38.5** 1.516 | **15.9** 0.625 | **19.1** 0.750 | **19.6** 0.770 | **22.7** 0.895 | **47.6** 1.875 | **45.0** 1.773 | **53.9** 2.123 |
| **21** | G | **41.7** 1.642 | **15.9** 0.625 | **20.6** 0.812 | **19.6** 0.770 | **24.3** 0.957 | **49.2** 1.938 | **45.6** 1.796 | **55.5** 2.186 |
| **23** | H | **44.9** 1.768 | **17.5** 0.688 | **23.8** 0.938 | **21.1** 0.829 | **27.5** 1.083 | **52.4** 2.062 | **47.2** 1.859 | **58.7** 2.310 |
| **25** | J | **48.0** 1.889 | **19.1** 0.750 | **25.4** 1.000 | **22.7** 0.895 | **29.1** 1.145 | **54.0** 2.125 | **48.7** 1.919 | **60.3** 2.373 |

**Millimeters** Inches

# Raychem AS85049 Adapters and Bandstraps

## AS85049/128 Band Straps

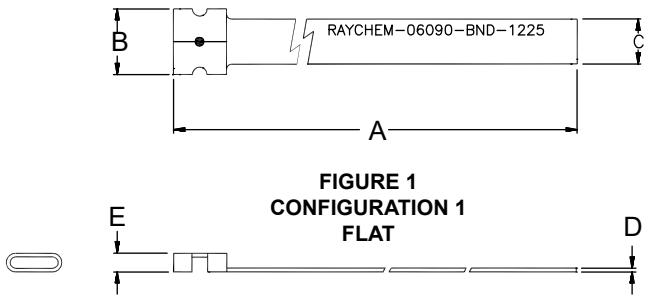


**FIGURE 1**
**CONFIGURATION 1**
**FLAT**

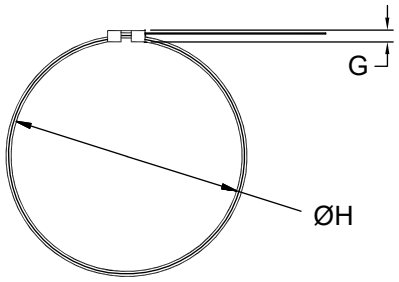


**FIGURE 2**
**CONFIGURATION 2**
**PRECOILED**

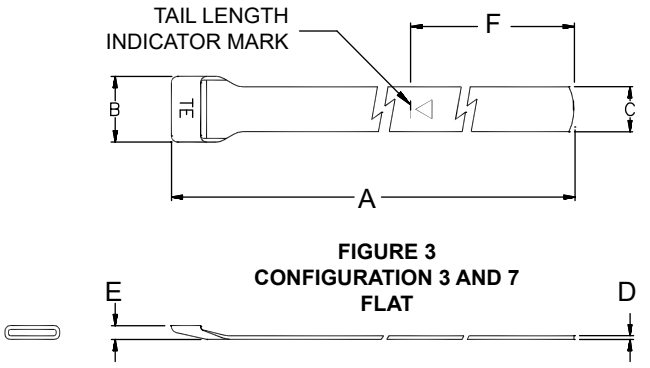


**FIGURE 3**
**CONFIGURATION 3 AND 7**
**FLAT**

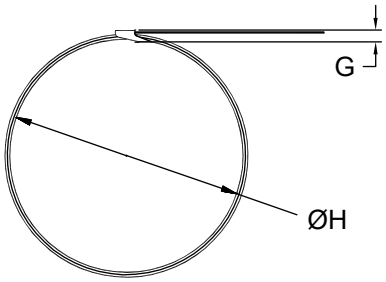


**FIGURE 4**
**CONFIGURATION 4 AND 8**
**PRECOILED**

### HIGH PERFORMANCE

- Excellent EMC shielding performance
- Excellent mechanical and environmental resistance
- Provides strain relief on each individual cable

### EASY TO USE

- One-piece assembly for simple installation
- Easy reentry
- Simplified maintenance and repair

### VERSATILE

- Accommodates up to four shielded cables per ferrule
- Compact size for easy installation in confined areas
- Available for circular connectors in straight, 45°, and 90° assemblies, plus swept and long bodies.

### APPLICATIONS

- Civilian and military aircraft
- Avionics
- Missiles and launch support systems
- Armored and military support vehicles
- Military ships (total shipboard hardening)
- Military communications
- Engines (FADEC harness hardening)

# Raychem HexaShield EMC Adaptors

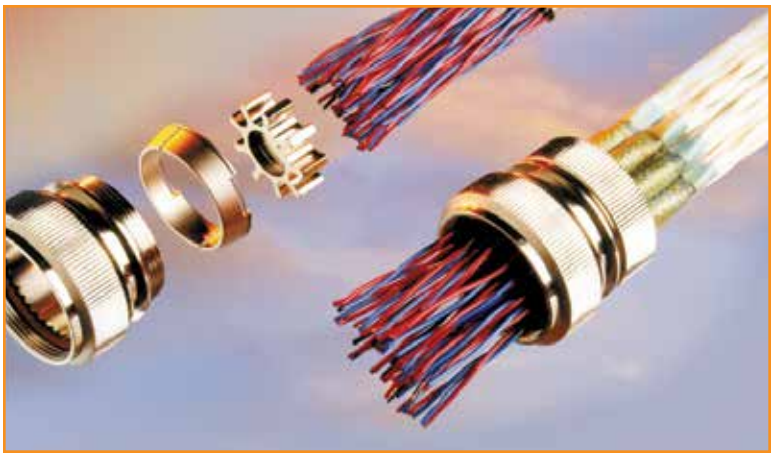

## High-Performance EMC Protection for Harsh Military and Commercial Environments

Raychem HexaShield high-performance adaptors help provide excellent EMC protection and reliability in a variety of military and commercial applications.

Easy to install, maintain and repair, HexaShield adaptors help provide outstanding shielding effectiveness by providing 360-degree EMC shielding on the termination area of each individual cable. They are available for circular connectors in a variety of angles, plus swept and long body configurations.

HexaShield adaptors outperform traditional pigtail terminations, especially in HIRF application. They provide excellent EMC protection with minimal degradation of shielding performance. The adaptors also help provide excellent mechanical and environmental protection.

# Specifications

### MATERIALS

- **Shell:** Aluminum alloy
- **Platings:** Electroless nickel (MIL-DTL-26074) or olive drab cadmium (QQ-P-416 Type II, Class 3)

### INSTALLATION PROCEDURES

- **RPIP-696-00:** HEX-A-02X and HET-A-04X
- **RPIP-696-03:** HET-03X

### GENERAL PROCEDURES

- **RPIP-696-07:** Cylindrical connectors, right-angle body
- **RPIP-696-04:** Cylindrical connectors, straight body

# Raychem HexaShield EMC Adaptors

## HexaShield Adaptors for Circular Connectors

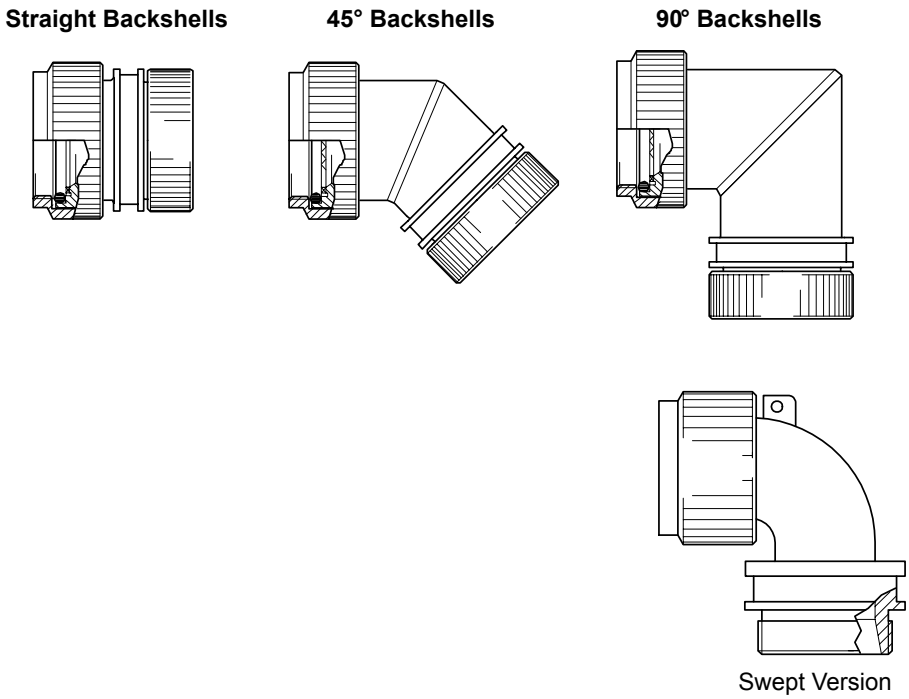


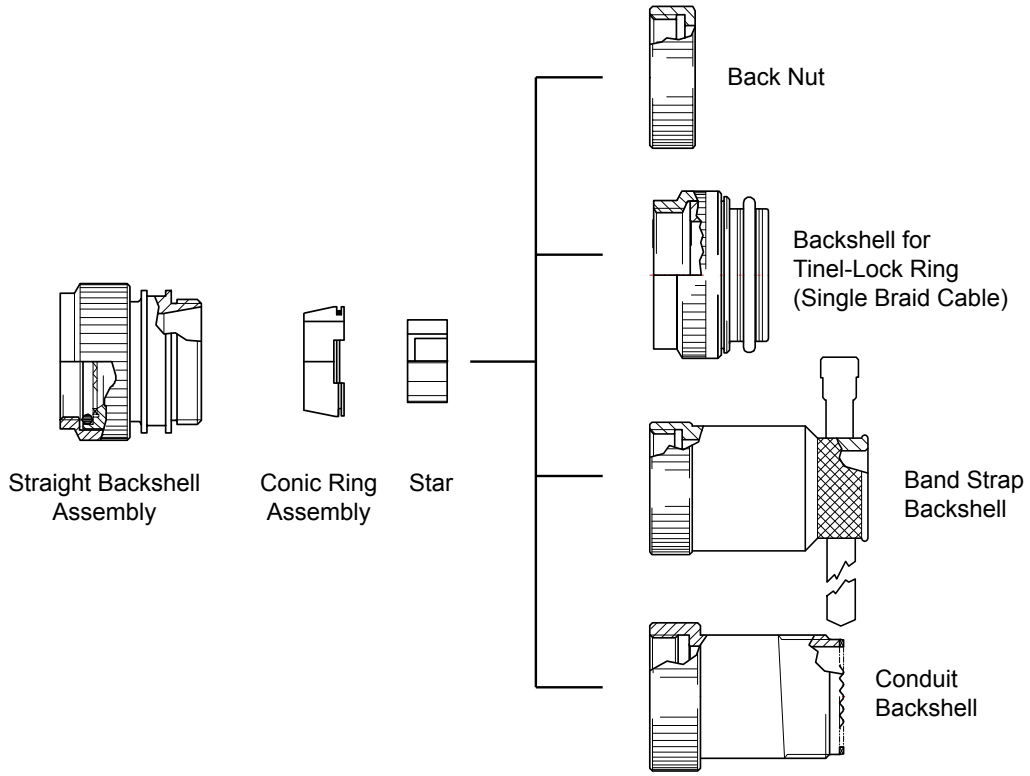

# Raychem HexaShield EMC Adaptors

## HexaShield Adaptor for Circular Connectors

### Part Numbering System

**HEXYY L - AY - 00 S - YY - AY - Y - DS**

**CONNECTOR CODE NUMBER**
- **40** MIL-DTL-38999 Series 3 and 4
- **41** MIL-DTL-38999 Series 1 and 2

**L** Long Body (Optional)
See SCD for Availability

**PLATING**
- **B** Cadmium
- **C** Electroless Nickel

**CONFIGURATION**
- **00** Straight Body
- **45** 45-Degree Angle Body
- **90** 90-Degree Angle Body

**S** Swept Version

**HEXASHIELD SIZE CODE**
**09, 11, 13, 15, 17, 19, 21, 23, 25**

**AXIMUM NUMBER OF FERRULES**
See Applicable SCD for Availability

**BACK NUT TYPE**
- **1** Standard
- **2** Clamping Nut for Tinel Ring
- **3** Clamping Nut with Bandstrap
- **C** Clamping Nut for Conduit Applicator

**DRILLED STAR**
See Applicable SCD for Star Options

## HexaShield Ferrule Kits

| Use | Part No. | |
|---|---|---|
| | Cadmium Finish | Electroless Nickel Finish |
| Small-Size Cable with SolderShield Terminator | HET-A-02B | HET-A-02C |
| Ferrules with Heat-Shrinkable Tubing for Unshielded Cables | HET-A-03B | HET-A-03C |
| Large-Size Cable with SolderShield Terminator | HET-A-04B | HET-A-04C |
| Ferrule, Solid Blank for Use When HET-A Is Not Needed | HEX07-AB | HEX07-AC |

# Raychem HexaShield EMC Adaptors

**Generalized System Performance**
(Actual system performance
in any one test method may differ.)

Transfer Impedance

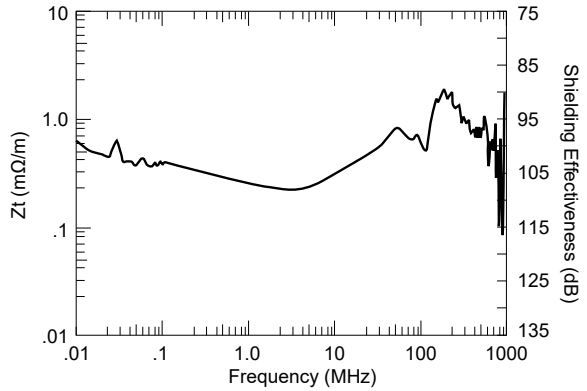


Protection Level

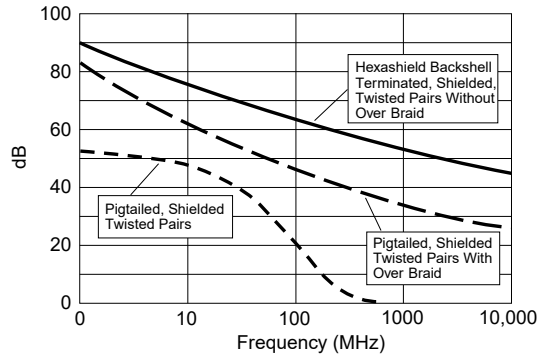


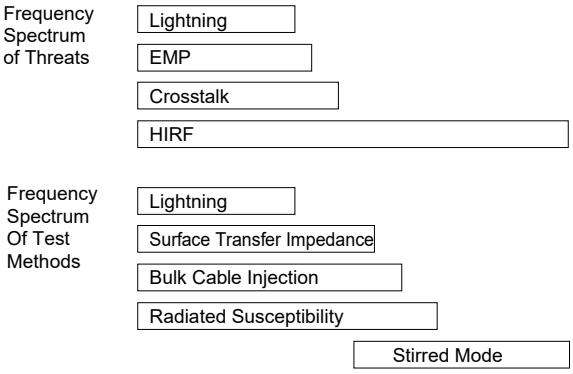

## WEIGHT-SAVING DESIGN

- Lightweight composite materials
- Simple design helps to minimize amount of material
- Well suited to light-duty applications

## SEALED

- Grommets provide sealing of individual wires

# ACT00 Lightweight Composite Tie-Style Strain Relief Adapters

ACT00 strain relief adapters offer composite bodies to help provide a simple, lightweight strain relief for cable uses in light-duty application. Cable can be secured to the body adapter with a tie wrap. Body adapters are available with various conductive platings to help support grounding, while a secondary grommet provides wire sealing.

The adapters are available with inserts to match the insert arrangement of the connector on which it is used.

## MATERIALS

- Coupling Nut and Body Adapter: Composite
- Body Adapter Finish: Nickel, tin, or olive drab cadmium
- Secondary Grommet: Silicone elastomer

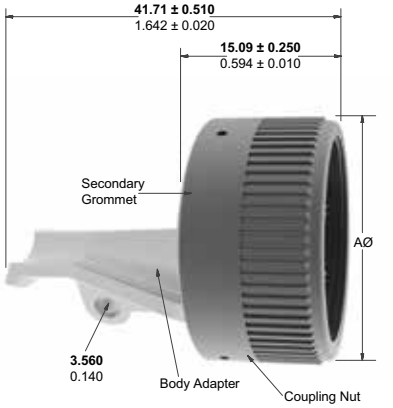


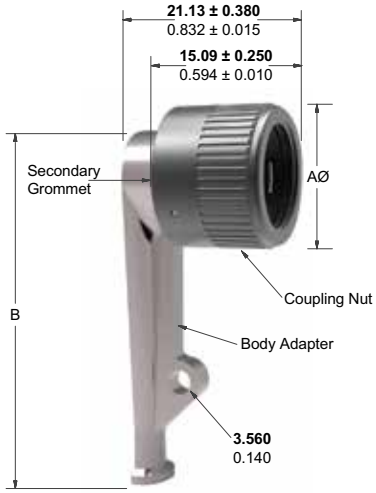


| Shell Size | ØA ±0.15 (0.006) | B ±0.80 (0.031) | Strength Bending Moment, Min. (kg, lb.) |
|---|---|---|---|
| 9 (A) | **0.650**<br>0.026 | **1.948**<br>0.077 | **11**<br>25 |
| 11 (B) | **0.775**<br>0.031 | **2.010**<br>0.079 | **11**<br>25 |
| 13 (C) | **0.905**<br>0.036 | **2.075**<br>0.082 | **11**<br>25 |
| 15 (D) | **1.030**<br>0.041 | **2.135**<br>0.084 | **22**<br>50 |
| 17 (E) | **1.160**<br>0.046 | **2.198**<br>0.087 | **22**<br>50 |
| 19 (F) | **1.270**<br>0.050 | **2.258**<br>0.089 | **22**<br>50 |
| 21 (G) | **1.400**<br>0.055 | **2.320**<br>0.091 | **34**<br>75 |
| 23 (H) | **1.525**<br>0.060 | **2.383**<br>0.094 | **34**<br>75 |
| 25 (J) | **1.655**<br>0.065 | **2.445**<br>0.096 | **45**<br>100 |

**Millimeters** Inches

# ACT00 Lightweight Composite Tie-Style Strain Relief Adapters

## Part Numbering System

**ACT00 U B - A - EL 38 P**

**SERIES**
**ACT00**

**FINISH**
- **A** Unplated Composite, Black
- **M** Nickel-Plated Body Adapter
- **R** Tin-Plated Body Adapter
- **W** Olive Drab Cadmium-Plated Body Adapter

**CONFIGURATION**

**SHELL SIZE**
**A, B, C, D, E, F, G, H, J**

**TYPE**
- **EL** Environmental, Straight, Light Duty
- **EN** Environmental, 90 Degree, Light Duty

**CABLE INSERT ARRANGEMENT**
- **00** No Insert Required
- See Cable Code Table

**INSERT TYPE**
- **P** Pin
- **S** Socket
- **N** No Insert Required

## Cable Code Table: Use to Specify the Insert Arrangement

| Cable Code | Insert Arrangement |
|---|---|
| 38 | 09–35 |
| 39 | 09–98 |
| 40 | 11–05 |
| 41 | 11–35 |
| 42 | 11–99 |
| 43 | 13–04 |
| 44 | 13–35 |
| 45 | 13–98 |
| 46 | 15–05 |
| 47 | 15–18 |
| 48 | 15–35 |
| 49 | 15–97 |
| 50 | 17–06 |
| 51 | 17–08 |
| 52 | 17–26 |

| Cable Code | Insert Arrangement |
|---|---|
| 53 | 17–35 |
| 54 | 19–11 |
| 55 | 19–32 |
| 56 | 19–35 |
| 57 | 21–11 |
| 58 | 21–16 |
| 59 | 21–35 |
| 60 | 21–41 |
| 61 | 23–21 |
| 62 | 23–35 |
| 63 | 23–53 |
| 64 | 23–55 |
| 65 | 25–04 |
| 66 | 25–19 |
| 67 | 25–20 |

| Cable Code | Insert Arrangement |
|---|---|
| 68 | 25–24 |
| 69 | 25–29 |
| 70 | 25–35 |
| 71 | 25–61 |
| 92 | 11–98 |
| 93 | 15–19 |
| 94 | 13–08 |
| 95 | 17–99 |
| 96 | 21–39 |
| 97 | 25–43 |
| 98 | 15–23 |
| 99 | 17–19 |
| 100 | 15–26 |

## ACT00 Lightweight Composite Tie-Style Strain Relief Adapters

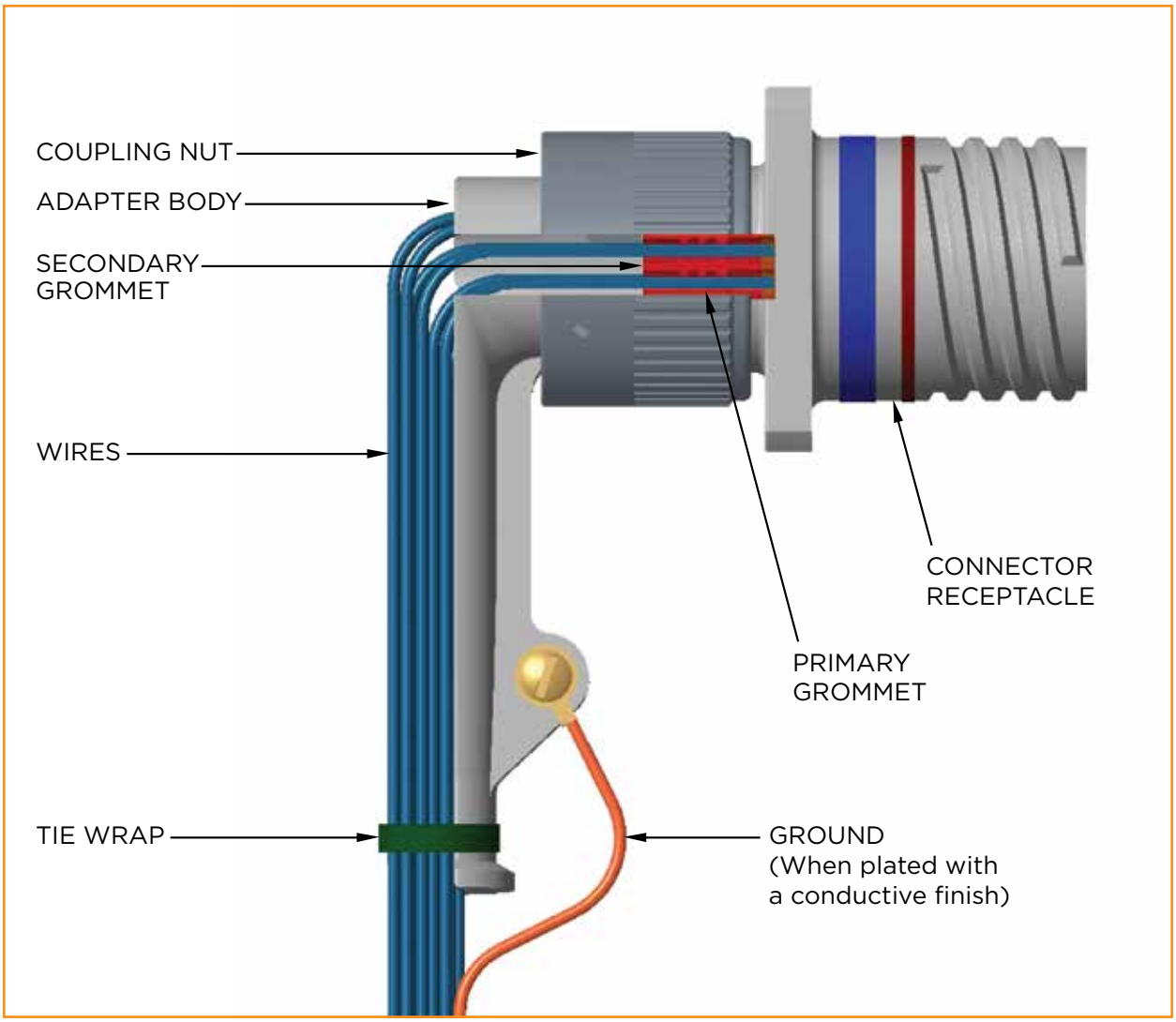

# 38999-Style Accessories

## Metal Protective Covers

**Series III**
**Plug Cap**
(with attachment)

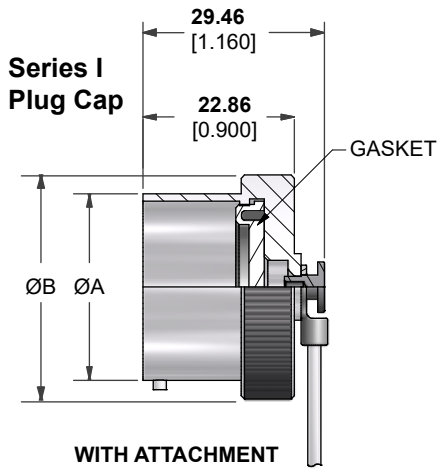


| Shell Size | A Max. | B Max. |
|---|---|---|
| 09 | **14.56**<br>0.573 | **20.83**<br>0.820 |
| 11 | **17.81**<br>0.701 | **23.88**<br>0.940 |
| 13 | **21.62**<br>0.851 | **27.18**<br>1.070 |
| 15 | **24.84**<br>0.978 | **30.23**<br>1.190 |
| 17 | **28.02**<br>1.103 | **33.53**<br>1.320 |
| 19 | **30.73**<br>1.210 | **36.58**<br>1.440 |
| 21 | **33.91**<br>1.335 | **39.88**<br>1.570 |
| 23 | **37.08**<br>1.460 | **42.92**<br>1.690 |
| 25 | **40.26**<br>1.585 | **46.23**<br>1.820 |

**Millimeters** Inches

**Series I**
**Receptacle Cap**
(with attachment)

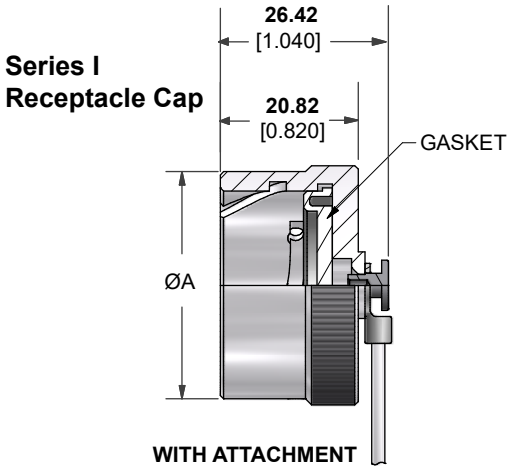


| Shell Size | A Max. |
|---|---|
| 09 | **21.84**<br>0.860 |
| 11 | **24.89**<br>0.980 |
| 13 | **29.46**<br>1.160 |
| 15 | **32.51**<br>1.280 |
| 17 | **35.81**<br>1.410 |
| 19 | **38.61**<br>1.520 |
| 21 | **41.91**<br>1.650 |
| 23 | **44.96**<br>1.770 |
| 25 | **48.00**<br>1.890 |

**Millimeters** Inches

# 38999-Style Accessories

## Metal Protective Covers

**Series III**
**Plug Cap**
(with attachment)

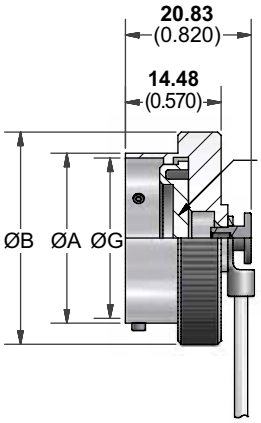


| Shell Size | ØA +0.03/-0.13 (0.001/0.005) | ØB Max. | ØG Min. |
|---|---|---|---|
| 08 | **12.00** 0.472 | **18.28** 0.720 | **10.60** 0.417 |
| 10 | **14.99** 0.590 | **21.59** 0.850 | **13.72** 0.540 |
| 12 | **19.05** 0.750 | **25.40** 1.000 | **17.50** 0.689 |
| 14 | **22.23** 0.875 | **28.70** 1.130 | **20.67** 0.814 |
| 16 | **25.40** 1.000 | **31.75** 1.250 | **24.00** 0.945 |
| 18 | **28.58** 1.125 | **35.05** 1.380 | **26.39** 1.039 |
| 20 | **31.75** 1.250 | **38.10** 1.500 | **29.60** 1.165 |
| 22 | **34.93** 1.375 | **41.40** 1.630 | **32.74** 1.289 |
| 24 | **38.10** 1.500 | **44.45** 1.750 | **35.92** 1.414 |

**Millimeters** Inches

# 38999-Style Accessories

## Metal Protective Covers

### Series III
### Plug Cap
(with attachment)

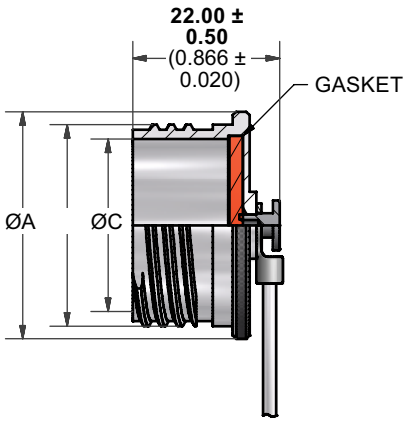


| Shell Size | ØA Max. | ØC Min. |
|---|---|---|
| 09 | **21.0** 0.827 | **12.6** 0.496 |
| 11 | **24.5** 0.965 | **15.8** 0.622 |
| 13 | **28.0** 1.102 | **19.4** 0.764 |
| 15 | **30.0** 1.181 | **22.6** 0.890 |
| 17 | **34.0** 1.339 | **25.8** 1.016 |
| 19 | **37.0** 1.457 | **28.6** 1.126 |
| 21 | **40.0** 1.575 | **31.8** 1.252 |
| 23 | **43.0** 1.693 | **34.8** 1.370 |
| 25 | **47.0** 1.850 | **38.1** 1.500 |

**Millimeters** Inches

### Series III
### Receptacle Cap
(with attachment)

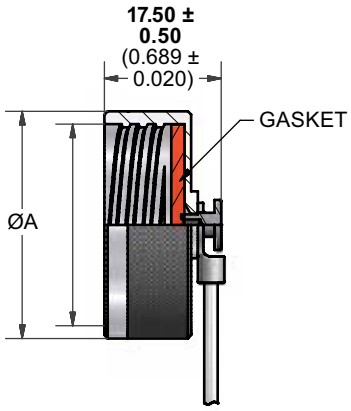


| Shell Size | ØA Max. |
|---|---|
| 09 | **18.0** 0.709 |
| 11 | **21.4** 0.843 |
| 13 | **25.8** 1.016 |
| 15 | **28.8** 1.134 |
| 17 | **32.0** 1.260 |
| 19 | **35.0** 1.378 |
| 21 | **38.3** 1.508 |
| 23 | **41.7** 1.642 |
| 25 | **44.6** 1.756 |

**Millimeters** Inches

# 38999-Style Accessories

## Metal Protective Covers

### Series III
### Anti-Decoupling Cap
(with attachment)

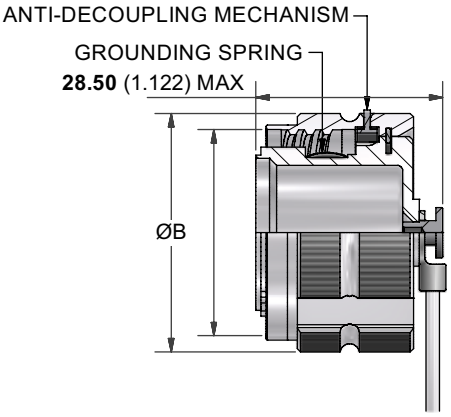


| Shell Size | ØB Max. |
|---|---|
| 09 | **21.8** 0.858 |
| 11 | **25.0** 0.984 |
| 13 | **29.4** 1.157 |
| 15 | **32.5** 1.280 |
| 17 | **35.7** 1.406 |
| 19 | **38.5** 1.516 |
| 21 | **41.7** 1.642 |
| 23 | **44.9** 1.768 |
| 25 | **48.0** 1.890 |

**Millimeters** Inches

### Series III
### Anti-Tamper Cap
(with attachment)

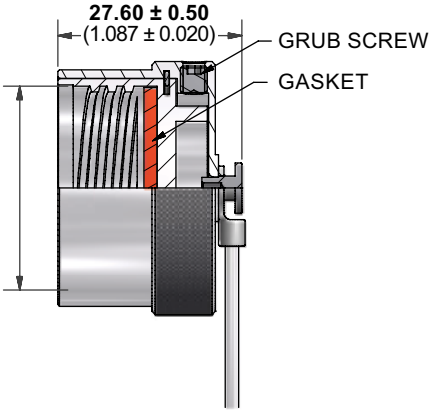


| Shell Size | ØB Max. |
|---|---|
| 09 | **22.6** 0.890 |
| 11 | **26.1** 1.028 |
| 13 | **29.3** 1.154 |
| 15 | **32.5** 1.280 |
| 17 | **37.9** 1.492 |
| 19 | **38.8** 1.528 |
| 21 | **42.0** 1.654 |
| 23 | **45.5** 1.791 |
| 25 | **50.3** 1.980 |

**Millimeters** Inches

# 38999-Style Accessories

## Metal Protective Covers

### Series III
### Arctic Grip Plug Cap
(with attachment)

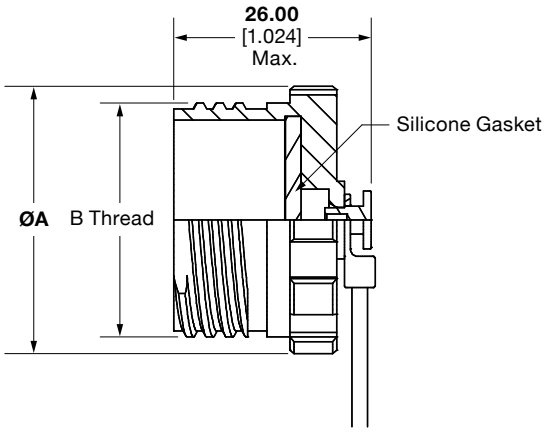


| Shell Size | ØA Max. |
|---|---|
| 09 | **21.0** 0.827 |
| 11 | **25.0** 0.984 |
| 13 | **28.0** 1.102 |
| 15 | **31.0** 1.220 |
| 17 | **35.0** 1.378 |
| 19 | **37.0** 1.457 |
| 21 | **40.0** 1.575 |
| 23 | **43.0** 1.693 |
| 25 | **47.0** 1.850 |

**Millimeters** Inches

### Series III
### Arctic Grip Receptacle Cap
(with attachment)

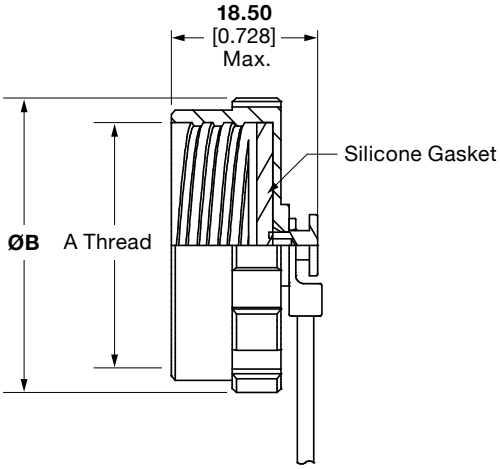


| Shell Size | ØB Max. |
|---|---|
| 09 | **23.7** 0.933 |
| 11 | **27.2** 1.071 |
| 13 | **30.7** 1.209 |
| 15 | **32.7** 1.287 |
| 17 | **36.7** 1.445 |
| 19 | **39.7** 1.563 |
| 21 | **42.7** 1.681 |
| 23 | **45.7** 1.799 |
| 25 | **49.7** 1.957 |

**Millimeters** Inches

# Metal Protective Covers for 38999 Series III

## POLAMCO Protective Caps – Lanyard Options

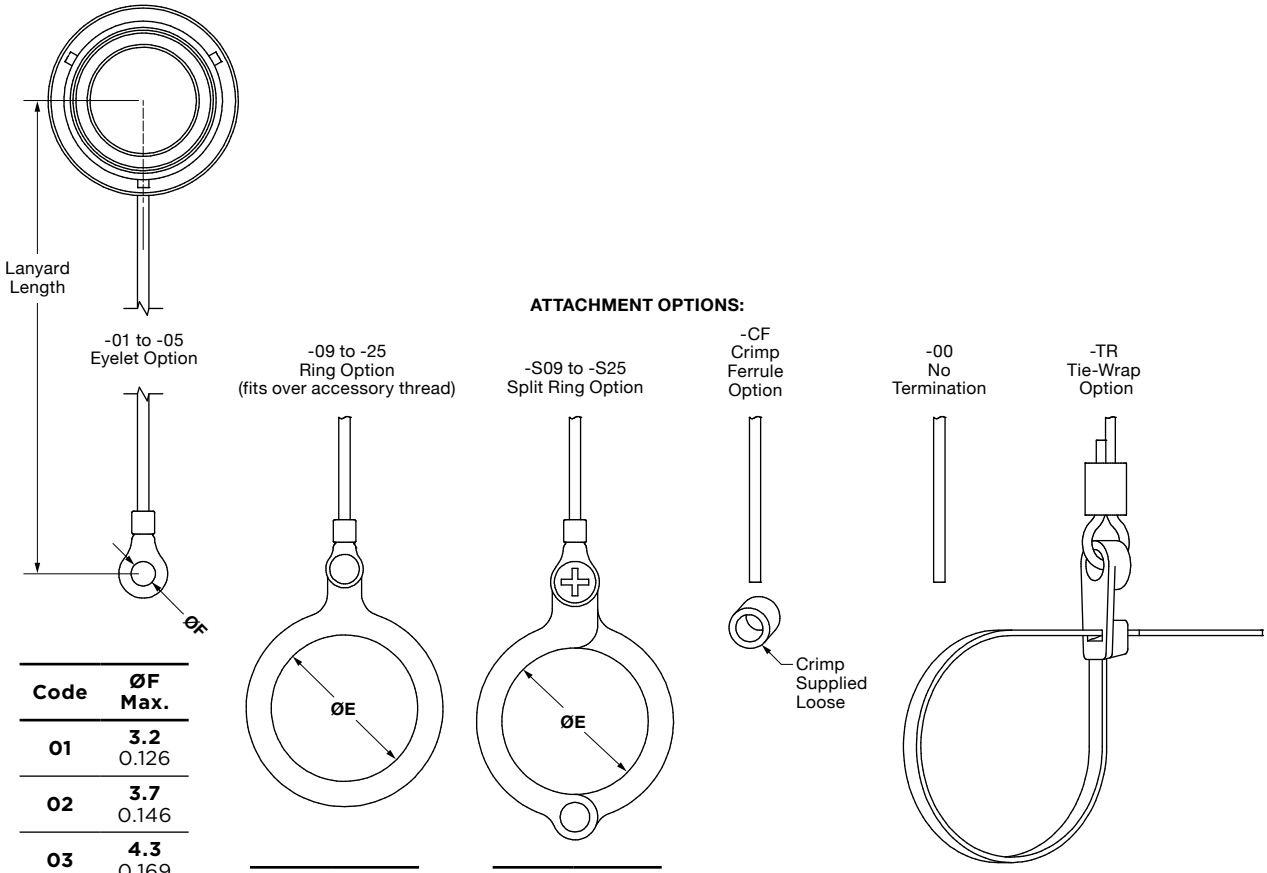


| Code | ØF Max. |
|---|---|
| 01 | **3.2** 0.126 |
| 02 | **3.7** 0.146 |
| 03 | **4.3** 0.169 |
| 04 | **5.3** 0.209 |
| 05 | **6.4** 0.252 |

**Millimeters** Inches

| Code | ØE Max. |
|---|---|
| 09 | **18.0** 0.709 |
| 11 | **21.4** 0.843 |
| 13 | **25.8** 1.016 |
| 15 | **28.8** 1.134 |
| 17 | **32.0** 1.260 |

**Millimeters** Inches

| Code | ØE Max. |
|---|---|
| 19 | **35.0** 1.378 |
| 21 | **38.3** 1.508 |
| 23 | **41.7** 1.642 |
| 25 | **44.6** 1.756 |

**Millimeters** Inches

**RUGGED**

- Helps protect connectors that are mated and unmated frequently
- Serves as an intermediary between plug and receptacle connector
- Available in MIL-DTL-38999 Series III and IV styles

**VERSATILE**

- One-piece connectors with plug and receptacle interfaces
- Choice of aluminum, stainless steel, or marine bronze shells
- Wide range of plating options

# POLAMCO Connector Savers

## 38999-Style Series III and Series IV Connectors

POLAMCO Connector Savers help protect connectors that are mated and unmated frequently. The one-piece connectors use plug interface on one end and a receptacle interface on the other to allow them to serve as an intermediary between plug and receptacle connector. This helps allow the connector saver to take the wear and tear of repeated mating cycles. In particular, this helps allow box-mounted receptacles to be more protected from wear and the eventual need to be replaced.

POLAMCO connector savers are available in both MIL-DTL-38999 Series III and IV styles. Options include aluminum, stainless steel, or marine bronze shells with a wide range of plating options.

- **Shell Material:** Aluminum, stainless steel, or nickel aluminum bronze
- **Finish:** See part numbering description
- **Seals:** Silicone elastomer
- **Insert:** Thermoset plastic
- **Contacts:** Copper alloy, gold plated

# POLAMCO Connector Savers

## 38999-Style Series III and Series IV Connectors

### Series III Connector Saver

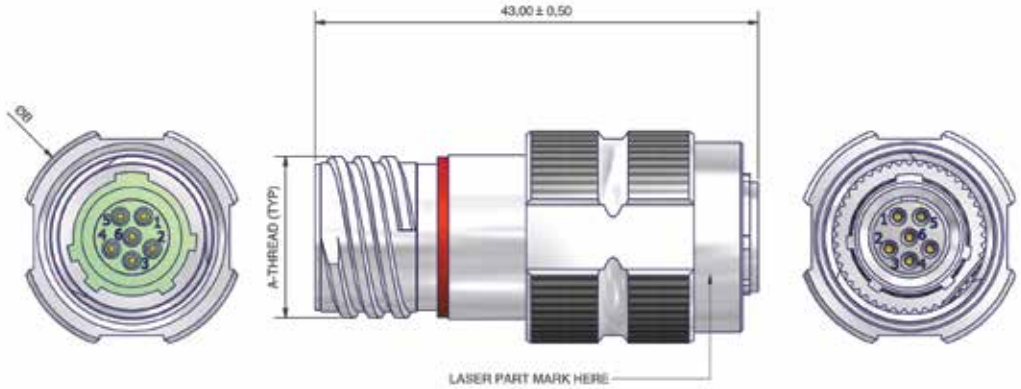


### Series IV Connector Saver

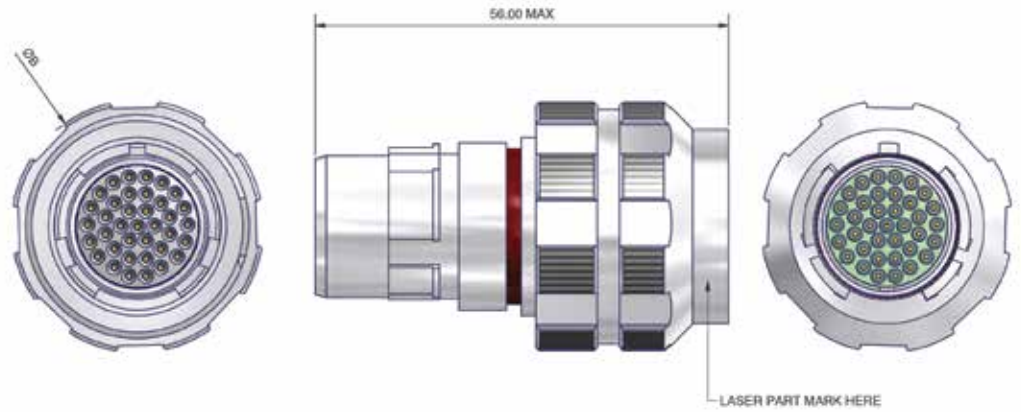


| Shell Size | Ø B | |
|---|---|---|
| | Series III | Series IV |
| 9 | **21.8**<br>0.858 | — |
| 11 | **25.0**<br>0.984 | **26.6**<br>1.047 |
| 13 | **29.4**<br>1.157 | **31.0**<br>1.220 |
| 15 | **32.5**<br>1.280 | **34.2**<br>1.346 |
| 17 | **35.7**<br>1.406 | **37.4**<br>1.472 |
| 19 | **38.5**<br>1.516 | **40.2**<br>1.583 |
| 21 | **41.7**<br>1.642 | **43.3**<br>1.705 |
| 23 | **44.9**<br>1.768 | **46.5**<br>1.831 |
| 25 | **48.0**<br>1.890 | **49.7**<br>1.957 |

**Millimeters** Inches

# POLAMCO Connector Savers

## 38999-Style Series III and Series IV Connectors

### Part Numbering System

**PC44CS - 15 35 - S N - 1-C**

**SERIES**
- **PC43CS** Series III
- **PC44CS** Series IV

**SHELL SIZE**
- **9, 11, 13, 15, 17, 19, 21, 23, 25**

**INSERT ARRANGEMENT**

**CONTACT RECEPTACLE END**
- **P** Pin
- **S** Socket

**KEYING**
- **N, A, B, C, D, E**

**MATERIAL/PLATING**
- **1-C** Aluminum/Electroless Nickel
- **1-B** Aluminum/Cadmium Olive Drab over Electroless Nickel
- **1-ZB** Aluminum/Zinc Cobalt Olive Drab over Electroless Nickel
- **1-ZK** Aluminum/Zinc Cobalt Black over Electroless Nickel
- **1-ZN** Aluminum/Zinc Nickel Black Passivate Over Electroless Nickel
- **4-J** Stainless Steel/Passivate
- **2-Z** Nickel Aluminum Bronze/Shot Blast

**SIMPLE, RELIABLE WIRE BUSSING**

- Internal pc board connects contacts for grounding distribution and power distribution
- Range of standard and custom bussing configurations

**WEIGHT AND SPACE SAVING**

- Composite and aluminum shells
- Eliminates external bussing components
- Shell sizes 9 through 25

# DEUTSCH CBC Series Circuit Board Connectors

### 38999 Series III Style Connectors with Bussed Contacts

DEUTSCH CBC connectors contain an internal printed circuit board used to bus contacts. A number of bussing arrangements are available. The lightweight connectors are available with either composite or aluminum shells. They offer an integrated solution for bussing needs by eliminating the need for external components.

## Specifications

- **Current:** Traces and sockets carry current levels up to the threshold of a:
  MS22073-3 circuit breaker for contact size 22
  MS22073-5 circuit breaker for contact size 20
  MS22073-7.5 circuit breaker for contact size 16
- **Conformal Coating:** per MIL-I-46058 and able to withstand 100 VDC for two seconds
- **Insulation Resistance:** greater than 100 megohms when tested at 45 VDC
- **Applicable Specifications:**
  IPC-600C
  IPC 0-275
  MIL-P-55110
  MS22073
  MIL-I-46058
  MIL-STD-1560
- **Frequency:** maximum of 3200 Hz (analog circuit) and 100 kb/s (for ARINC 429 signals)
- **Circuit-to-Circuit Crosstalk Rejection:** minimum of 60 dB, nominal 80 dB
- **Temperature:** 125°C maximum continuous operating temperature for finished circuit board

# DEUTSCH CBC Series Circuit Board Connectors

| | CBC Connector Base Typical Part No. | | | |
|---|---|---|---|---|
| | **59052** | **59108** | **66363** | **59091** |
| **Shell Sizes** | 13, 15, 19, 25 | 15 | 9, 11, 13, 15, 17, 19, 23, 25 | 25 |
| **Shell Material** | Composite | Composite | Aluminum | Nickel-Plated Composite |
| **Backpack Cover** | Composite or Aluminum | | | Nickel-Plated Composite |
| **Contacts** | Copper Alloy | | | Copper Alloy |
| **Contact Plating** | DEUTSCH COAT V | | | Gold over Nickel |
| **Resilient Inserts** | Silicone Elastomers | | | |
| **Plastic Inserts** | Thermoplastic | | | |

## Dimensions

| Shell Size | ØA Max. | ØB Max. |
|---|---|---|
| **9** | **21.79**<br>0.858 | **18.29**<br>0.720 |
| **11** | **24.99**<br>0.984 | **21.21**<br>0.835 |
| **13** | **29.39**<br>1.157 | **24.21**<br>0.953 |
| **15** | **32.49**<br>1.279 | **28.19**<br>1.110 |
| **17** | **35.69**<br>1.405 | **31.19**<br>1.228 |
| **19** | **38.48**<br>1.515 | **34.21**<br>1.347 |
| **23** | **44.91**<br>1.768 | **40.21**<br>1.583 |
| **25** | **47.98**<br>1.889 | **43.18**<br>1.700 |

**Millimeters** Inches

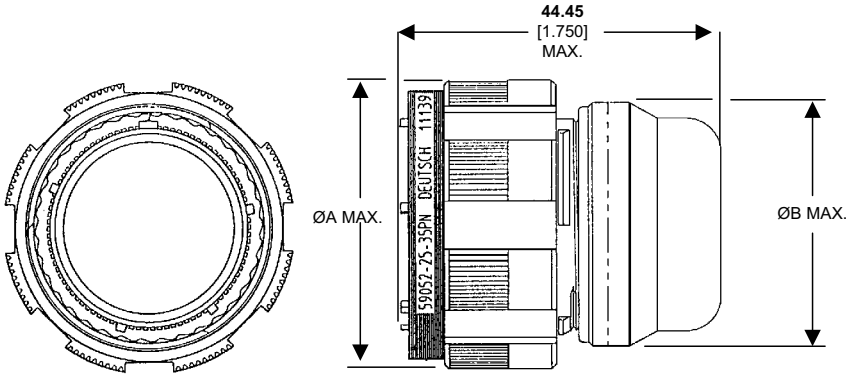


### Part Numbering

See each product family for availability of different options.
Consult TE for configurations not shown here.

**66363 W 11 A 35 P N**

**BASIC IDENTIFIER**
**59052** Composite Shell
**59108** Composite Shell
**66363** Aluminum Shell

**PLATING**
**- (Dash)** Nickel
**W** Olive Drab Cadmium

**SHELL SIZE**
**09, 11, 13, 15, 17, 19, 23, 25**

**TRACE PATTERN**
**– (Dash), A, B, C, . . .**

**KEYING POSITION**
**N, A, B, C, D, or E**

**CONTACT**
**P** Pin
**S** Socket

**INSERT ARRANGEMENT**
**(See tables)**

# 59052 Composite Plug

| Insert Arrangement 13-98<br>Trace Pattern A<br>Typical Part No. 59052-13A98PN | |
|---|---|
| **Buss Size** | **Contact Numbers** |
| 2 Bussed Contacts | A, B<br>C, F<br>D, E |
| Spare | G, H, J, K |

| Insert Arrangement 13-98<br>Trace Pattern B<br>Typical Part No. 59052-13B98PN | |
|---|---|
| **Buss Size** | **Contact Numbers** |
| 2 Bussed Contacts | E, H<br>F, G |
| 3 Bussed Contacts | A, B, J |
| Spare | C, D, K |

| Insert Arrangement 19-32<br>Trace Pattern A<br>Typical Part No. 59052-19A32SN | |
|---|---|
| **Buss Size** | **Contact Numbers** |
| 3 Bussed Contacts | D, E, F |
| 4 Bussed Contacts | U, V, W, X |
| 5 Bussed Contacts | d, e, f, g, h |
| Spare | A, B, C, G, H<br>J, K, L, M, N<br>P, R, S, T, Y<br>Z, a, b, c, j |

| Insert Arrangement 25-04<br>Trace Pattern C<br>Typical Part No. 59052-25C04SA | |
|---|---|
| **Buss Size** | **Contact Numbers** |
| 3 Bussed Contacts | M, N, P |
| 4 Bussed Contacts | A, B, C, D<br>DD, EE, FF, JJ |
| 6 Bussed Contacts | E, F, G, J, K, L |
| Spare | H, R, S, T, U, V<br>W, X, Y, Z, a, b<br>c, d, e, l, g, h<br>k, m, n, p, q, r<br>s, l, u, v, w, x<br>y, z, AA, BB, CC<br>GG, HH, KK, LL |

| Insert Arrangement 25-35<br>Trace Pattern – (Dash)<br>Typical Part No. 59052-25-35PN | |
|---|---|
| **Buss Size** | **Contact Numbers** |
| 3 Bussed Contacts | 1, 2, 3<br>4, 5, 6<br>8, 9, 10<br>11, 12, 13<br>14, 24, 35<br>23, 34, 46<br>47, 57, 58<br>59, 60, 61<br>62, 63, 64<br>65, 66, 67<br>68, 69, 70<br>80, 81, 93<br>92, 103, 113<br>104, 114, 121<br>115, 116, 117<br>118, 119, 120<br>122, 123, 124<br>125, 126, 127 |
| 4 Bussed Contacts | 15, 16, 17, 18<br>19, 20, 21, 22<br>26, 27, 28, 29<br>30. 31, 32, 33<br>95, 96, 97, 98<br>99, 100, 101, 102<br>105, 106, 107, 108<br>109, 110, 111, 112 |
| 5 Bussed Contacts | 25, 37, 38, 39, 40<br>41, 42, 43, 44, 45<br>36, 48, 49, 50, 51<br>52, 53, 54, 55, 56<br>82, 71, 72, 73, 74<br>75, 76, 77, 78, 79<br>94, 83, 84, 85, 86<br>87, 88, 89, 90, 91 |
| Spare | 7, 28 |

| Insert Arrangement 25-61<br>Trace Pattern – (Dash)<br>Typical Part No. 59052-25-61PN | |
|---|---|
| **Buss Size** | **Contact Numbers** |
| 4 Bussed Contacts | G, H, g, h<br>J, I, y, z<br>P, m, CC, MM<br>R, n, DD, EE<br>S, T, U, V<br>W, X, Y, I<br>Z, u, HH, JJ<br>a, v, w, x<br>p, q, r, s |
| 5 Bussed Contacts | A, B, C, D, E,<br>b, c, d, e, f<br>K, L, j, AA, KK<br>M, N, k, BB, LL |
| Spare | F |

## 59108 Composite Plug

| Insert Arrangement 15-35<br>Trace Pattern C<br>59108-15C35PN Bussing Arrangements | |
|---|---|
| **Buss Size** | **Contact Numbers** |
| 21 Bussed Contacts | 1, 2, 3, 4, 5, 6, 7, 8, 9, 10, 11, 12, 13, 14, 15, 16, 17, 18, 32, 33, 34 |
| 15 Bussed Contacts | 19, 20, 21, 22, 23, 24, 25, 26, 27, 28, 29, 30, 31, 36, 37 |
| Spare | 35 |

## 66363 Aluminum

| Insert Arrangement 09-35<br>Trace Pattern A<br>Typical Part No. 66363W09A35PA | |
|---|---|
| **Buss Size** | **Contact Numbers** |
| 2 Bussed Contacts | 1, 2<br>3, 4 |
| Spare | 5, 6 |

| Insert Arrangement 09-35<br>Trace Pattern B<br>Typical Part No. 66363W09B35PN | |
|---|---|
| **Buss Size** | **Contact Numbers** |
| 2 Bussed Contacts | 1, 2<br>3, 4 |
| Spare | 5, 6 |

| Insert Arrangement 09-35<br>Trace Pattern C<br>Typical Part No. 66363W09C35PN | |
|---|---|
| **Buss Size** | **Contact Numbers** |
| 2 Bussed Contacts | 5, 6 |
| Spare | 1, 2, 3, 4 |

| Insert Arrangement 11-35<br>Trace Pattern A<br>Typical Part No. 66363W11A35PN | |
|---|---|
| **Buss Size** | **Contact Numbers** |
| 3 Bussed Contacts | 1, 3, 6<br>2, 4, 5<br>9, 10, 11 |
| Spare | 7, 8, 12, 13 |

| Insert Arrangement 11-35<br>Trace Pattern B<br>Typical Part No. 66363W11B35PN | |
|---|---|
| **Buss Size** | **Contact Numbers** |
| 3 Bussed Contacts | 1, 6, 8<br>2, 5, 7 |
| 2 Bussed Contacts | 9, 10<br>11, 12 |
| Spare | 3, 4, 13 |

| Insert Arrangement 11-35<br>Trace Pattern C<br>Typical Part No. 66363W11C35PN | |
|---|---|
| **Buss Size** | **Contact Numbers** |
| 2 Bussed Contacts | 3, 7<br>4, 8<br>6, 10<br>5, 9 |
| Spare | 1, 2, 11, 12, 13 |

| Insert Arrangement 11-35<br>Trace Pattern D<br>Typical Part No. 66363W11D35PN | |
|---|---|
| **Buss Size** | **Contact Numbers** |
| 3 Bussed Contacts | 1, 7, 9<br>2, 8, 19 |
| Spare | 3, 4, 5, 6, 11, 12, 13 |

| Insert Arrangement 11-35<br>Trace Pattern E<br>Typical Part No. 66363W11E35PN | |
|---|---|
| **Buss Size** | **Contact Numbers** |
| 2 Bussed Contacts | 4, 10<br>5, 9 |
| Spare | 1, 2, 3, 6, 7, 8, 11, 12, 13 |

## 66363 Aluminum (continued)

| Insert Arrangement 11-35<br>Trace Pattern F<br>Typical Part No. 66363W11F35PN | |
|---|---|
| **Buss Size** | **Contact Numbers** |
| 2 Bussed Contacts | 1, 10<br>2, 9<br>3, 8<br>4, 7<br>5, 6 |
| Spare | 11, 12, 13 |

| Insert Arrangement 15-35<br>Trace Pattern A<br>Typical Part No. 66363W15A35PN | |
|---|---|
| **Buss Size** | **Contact Numbers** |
| 2 Bussed Contacts | 1, 7<br>2, 11<br>3, 15 |
| 4 Bussed Contacts | 4, 8, 12, 16<br>5, 9, 13, 17<br>6, 10, 14, 18 |
| Spare | 19 through 37 |

| Insert Arrangement 15-35<br>Trace Pattern B<br>Typical Part No.66363W15B35PN | |
|---|---|
| **Buss Size** | **Contact Numbers** |
| 2 Bussed Contacts | 4, 8, 12, 16<br>5, 9, 13, 17<br>6, 10, 14, 18 |
| 4 Bussed Contacts | 4, 8, 12, 16<br>5, 9, 13, 17<br>6, 10, 14, 18 |
| Spare | 21 through 37 |

| Insert Arrangement 17-35<br>Trace Pattern A<br>Typical Part No. 66363W17A35PN | |
|---|---|
| **Buss Size** | **Contact Numbers** |
| 2 Bussed Contacts | 1, 33<br>5, 34<br>9, 35<br>13, 36<br>17, 37<br>21, 38<br>25, 39<br>29, 40 |
| 9 Bussed Contacts | 2, 6, 10, 14, 18, 22, 26, 30, 41<br>3, 7, 11, 15, 19, 23, 27, 31, 42<br>4, 8, 12, 16, 20, 24, 28, 32, 43 |
| Spare | 44 through 55 |

| Insert Arrangement 23-55<br>Trace Pattern A<br>Typical Part No. 66363W23A55PN | |
|---|---|
| **Buss Size** | **Contact Numbers** |
| 2 Bussed Contacts | D, V<br>E, U<br>F, T<br>G, S<br>H, R<br>J, P<br>K, N<br>L, M<br>w, z<br>x, y |
| Spare | A, B, C, W, X, Y, Z, a, b, c, d, e, f, g, h, j, k, m, n, p. q, u, v, AA, BB, CC, DD, EE, FF, GG, HH, i, r, s, l, u |

| Insert Arrangement 23-55<br>Trace Pattern B<br>Typical Part No. 66363W23B55PN | |
|---|---|
| **Buss Size** | **Contact Numbers** |
| 2 Bussed Contacts | A, C<br>M, d<br>N, c<br>S, b<br>T, o<br>P, Z<br>R, Y<br>U, X<br>V, W<br>e. p<br>y, AA<br>z, BB |
| Spare | B, D, E, F, G, H, J, K, L, q, n, r, h, u, w, x, CC, DD, FF, GG, HH, EE, m, s, k, l, j, v, f, g, i |

| Insert Arrangement 25-35<br>Trace Pattern A<br>Typical Part No. 66363W25A35PN | |
|---|---|
| **Buss Size** | **Contact Numbers** |
| 3 Bussed Contacts | 54, 66, 77<br>55, 67, 78<br>61, 62, 63<br>72, 73, 74 |
| 4 Bussed Contacts | 52, 64, 75, 87<br>53, 65, 76, 88 |
| Spare | 1 through 51, 56, 57, 58, 59, 60, 68, 69, 70, 71, 79 through 86, 89 through 128 |

# Assembly Instructions

## Contact Crimping

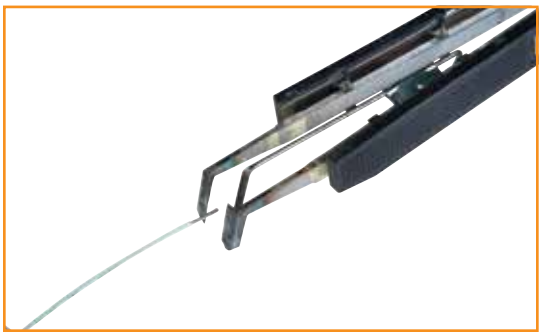

**1** Burn through the insulation with a hot wire stripper or use other approved stripping method. Do not remove the insulation at this point. This will help protect the wire strands from splaying. Refer to contact information sheet for proper wire insulation strip length.

**2** Set the dial of the crimp to the proper setting for wire gage and contact as noted on the contact information sheet or on the tool. Be sure that the proper locator is used. See contact information sheet for proper locator.

**3** Drop the contact into the crimping tool with the contact crimp barrel facing up.

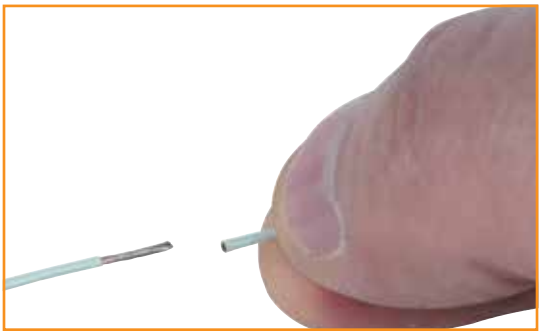

**4** Remove the small piece of insulation from the wire. Do not pinch the insulation with the fingernails during this procedure. The wire is now ready to be crimped to the contact.

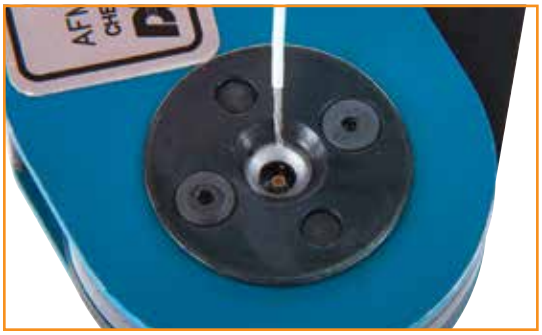

**5** Insert the bare wire into the open end of the contact and squeeze the handles of the tool together. The crimping tool will not release until the full crimping cycle has been performed. Remove the crimped contact and wire from the tool.

**6** Two series of 4 indents grip the wire and secure the contact to the wire. Visibility of the wire in the contact inspection hole (arrow) indicates that the wire is crimped into the contact at the proper depth. Inspect to make sure there are no loose or nicked strands.

# Assembly Instructions

## Contact Insertion

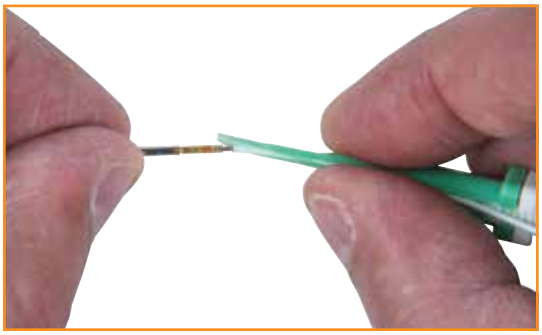

**1** Hold the insertion half of the tool between the thumb and forefinger and lay the wire against the slot of the tool, then snap the wire into the slot.

**2** After the wire snaps into the tool, seat the retention shoulder against the tip of the tool.

**3** Holding the connector with the rear grommet facing you, slowly push the contact straight into the grommet cavity. Do not twist the tool. Note: Some wire constructions may not require the use of an insertion tool.

**4** A firm stop will be evident when the contact positively seats in the connector. Remove the tool by sliding it back on the wire. The contact will now be securely locked in place.

# Assembly Instructions

## Contact Removal

**1** With the rear of the connector facing you, lay the wire of the contact along the slot of the tool, leaving about 1/2" from the end of the tool to the rear of the connector. Squeeze the wire firmly into the tool between the thumb and forefinger about 1/2" from the tip and quickly pull the tool away from the connector.

**2** The wire will now have snapped into place. Slide the tool down along the wire and into the rear cavity and slowly into the connector until a positive resistance is felt. At this time, the contact retaining mechanism is in the unlocked position.

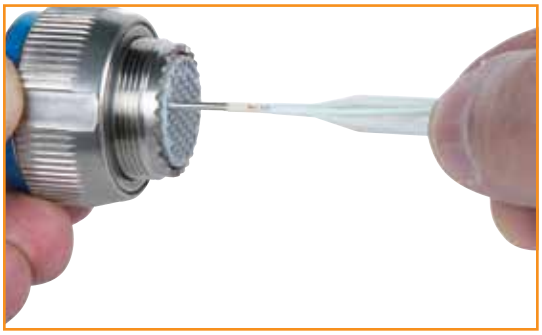

**3** Press the wire of the contact against the serrations of the plastic tool and pull both the tool and the contact/wire assembly out of the connector.

**Caution**: When using minimum diameter wire, the tool may have a tendency to stop against the rear of the contact crimp barrel. If this should occur, careful manipulation of the tool will help permit it to ride over the crimp barrel and into the proper position to unlock the contact.

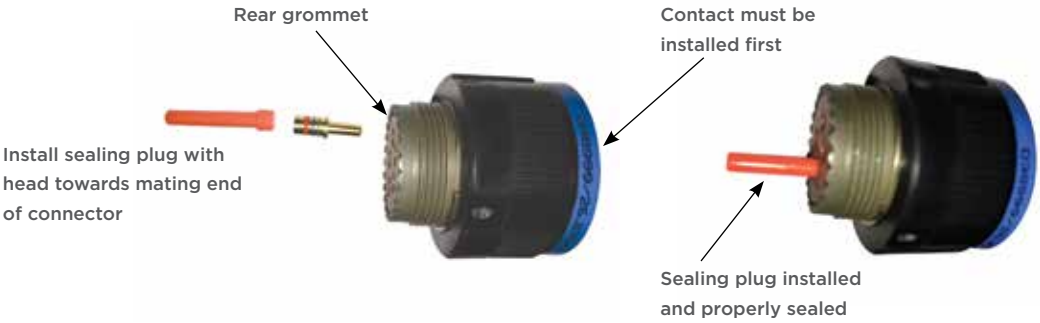

# Notes

## LET'S CONNECT

We make it easy to connect with our experts and are ready to provide all the support you need. Just call your local support number or visit www.te.com/industrial to chat with a Product Information Specialist.

## Technical Support

te.com/support-center

| | | | |
|---|---|---|---|
| North America | +1 800 522 6752 | Asia Pacific | +86 400 820 6015 |
| North America (Toll) | +1 717 986 7777 | Japan | +81 044 844 8180 |
| EMEA/South Africa | +800 0440 5100 | Australia | +61 2 9554 2695 |
| EMEA (Toll) | +31 73 624 6999 | New Zealand | +64 (0) 9 634 4580 |
| India (Toll-Free) | +800 440 5100 | | |

Withstand Harsh Environments with Rugged, Capable Connectors for Signal, Power, Control, and Optical Needs

# te.com/38999

AMP, AGASTAT, CeeLok FAS-X, CII, DEUTSCH, HARTMAN, HexaShield, KILOVAC, MICRODOT, NANONICS, POLAMCO, PRO BEAM, Raychem, SEACON, TE, TE Connectivity and the TE connectivity (logo) are trademarks of TE Connectivity. Other products, logos, and company names mentioned herein may be trademarks of their respective owners.

While TE Connectivity (TE) has made every reasonable effort to ensure the accuracy of the information herein, nothing herein constitutes any guarantee that such information is error-free, or any other representation, warranty or guarantee that the information is accurate, correct, reliable or current. The TE entity issuing this publication reserves the right to make any adjustments to the information contained herein at any time without notice. All implied warranties regarding the information contained herein, including, but not limited to, any implied warranties of merchantability or fitness for a particular purpose are expressly disclaimed. The dimensions herein are for reference purposes only and are subject to change without notice. Specifications are subject to change without notice.

Consult TE for the latest dimensions and design specifications.

© 2018 TE Connectivity. All Rights Reserved.

**1-1773922-9 01/18**