Pomona®

Model 6717
Dual Output, 50 Ohm BNC Circuit Board Mount, White Valox Case

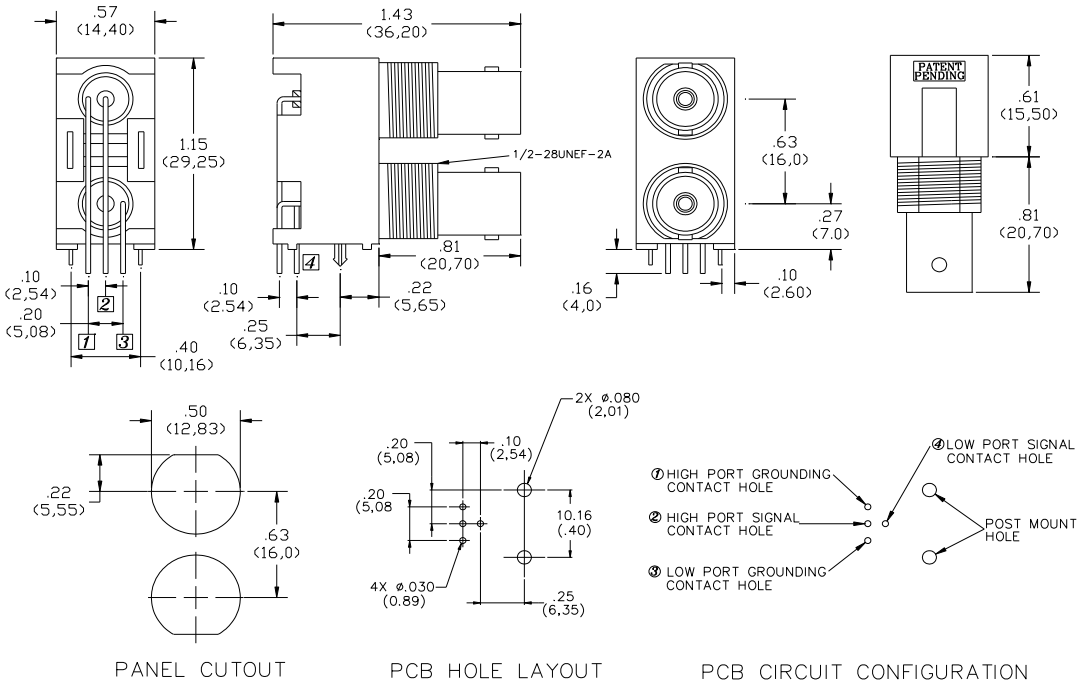

Materials:

Case	White Valox
BNC Body	Nickel plated brass
Center Contact Pin	Gold plated brass
Center Contact Socket	Gold plated phosphor bronze
Insulator	Polybutylene Terephthalate

Ratings:

Impedance:	50 Ohms
Frequency:	0 to 4 GHz
VSWR:	1.30 max
Contact Resistance:	3 Milliohms max.
Voltage	* 500 V
Insulation Resistance:	5,000 Megohms min.
Insertions:	500
Temperature:	-40 to +85 C
Shock	50 G
Vibration	20 G from 80 to 2000 Hz

* *Hands free testing* in controlled voltage environment: *For CE compliance:* not intended for hand held use at voltages above 33 Vrms / 70 Vdc.

All dimensions are in inches. Tolerances (except noted): .xx = ±.02” (,51 mm), .xxx = ± .005” (,127 mm).
All specifications are to the latest revisions. Specifications are subject to change without notice.
Registered trademarks are the property of their respective companies. Made in USA

Sales: 800-490-2361 Fax: 888-403-3360 Technical Assistance: 800-241-2060
For “Where to Buy” information, visit the Pomona web site at www.pomonaelectronics.com