DO NOT SCALE	METRIC	THIRD ANGLE PROJECTION
DIMENSIONS IN mm		

WIRE RANGE :
1,0–2,6 mm²

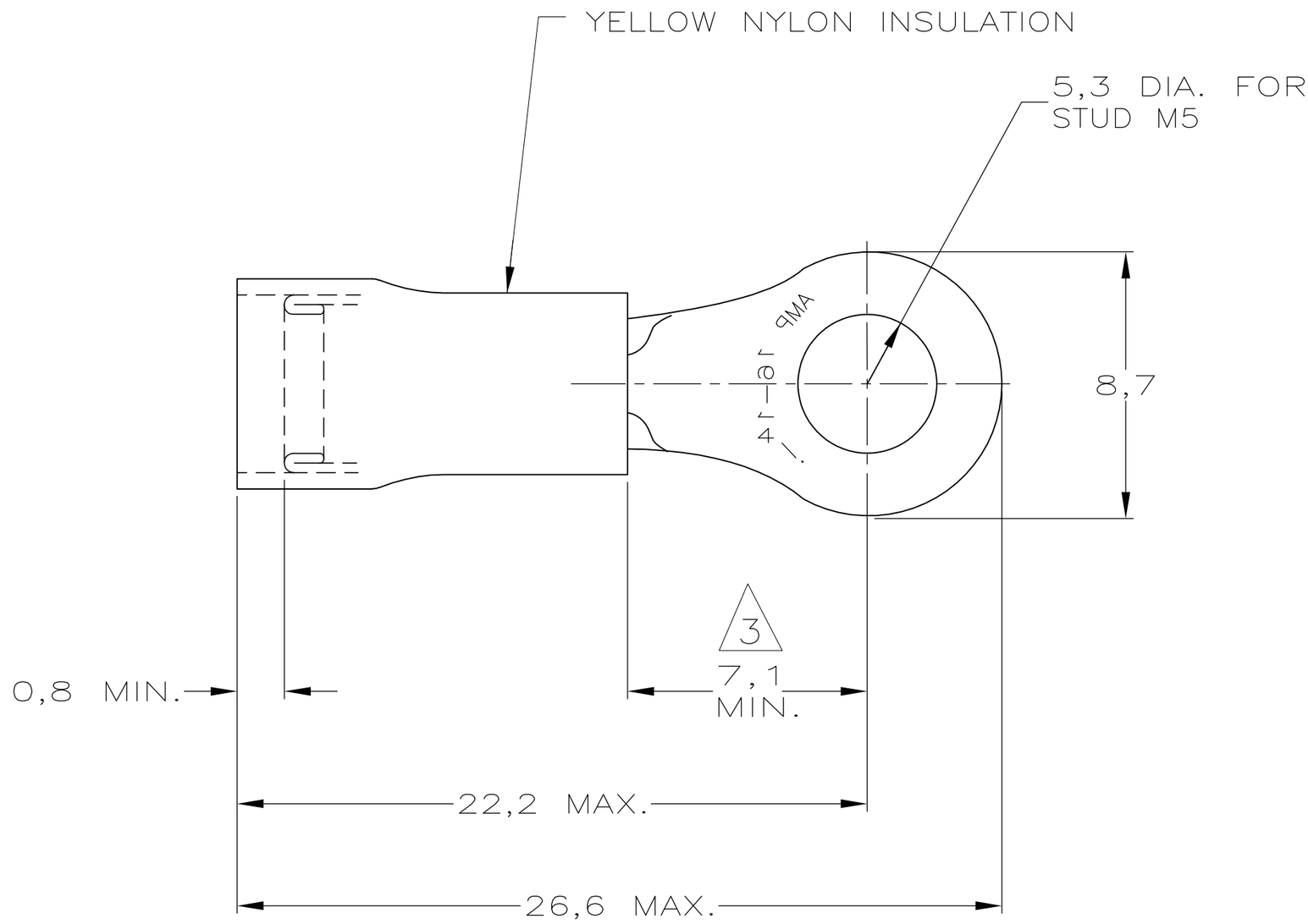

1 TONGUE MATERIAL THICKNESS 1,2mm

2 WIRE INS. DIA IS 3.8–5.8

3 FROM EDGE OF METAL WIRE BBL TO CENTER OF STUD HOLE

OBSOLETE	160011 MOUNTED ON TAPE		~~2-160011-1~~
TOL. ±0.2	TIN	COPPER	160011
	FINISH	MATERIAL	PARTNUMBER

LTR.	REVISION RECORD	DR.	CHK.	DATE
—	—	–	–	–
—	—	–	–	–
—	—	–	–	–
—	—	–	–	–
—	—	–	–	–
C1	ECO–09–024717	KK	AEG	06NOV09
C	0G3A–0002–04	JR	TM	02MAR04

CUSTOMER DRAWING — FOR REFERENCE ONLY WILL NOT BE UPDATED

© COPYRIGHT 19 – BY AMP HOLLAND B.V.
ALL INTERNATIONAL RIGHTS RESERVED.AMP PRODUCTS MAY BE COVERED BY U.S. AND FOREIGN AND/OR PATENTS PENDING.

THIS DRAWING IS UNPUBLISHED
~~RELEASED FOR PUBLICATION – ,19 –~~

AMP HOLLAND B.V.
's–Hertogenbosch,
The Netherlands.

NAME
PIDG
RINGTONGUE

DR.: J.v.LIEMPT	CHK.: A.BIJNEN	APP.: M.v.DRIEL	DWG.No. 160011	REV.LTR. C1	SHEET 1 OF 1	A4
DATE: 30 JAN 97	DATE: –	DATE: –				