THIS DRAWING IS UNPUBLISHED. RELEASED FOR PUBLICATION APRIL ,2004.
© COPYRIGHT 2004 BY TYCO ELECTRONICS CORPORATION. ALL RIGHTS RESERVED.

LOC	DIST
E	B

REVISIONS

P	LTR	DESCRIPTION	DATE	DWN	APVD
	A	EBD0-0035-03	30JAN04	RS	FWK

NOTES:

1. SINGLE PACK IN ACCORDANCE WITH SPEC 107-3275
2. 100 TRAY PACK IN ACCORDANCE WITH SPEC 107-3275
3. 0.08µm Au PLATING OVER 1.27µm Ni PLATING
4. 0.08µm Au PLATING OVER 1.27µm Ni PLATING OVER 0.76µm Cu PLATING
5. 0.76µm Au PLATING OVER 1.27µm Ni PLATING OVER 0.76µm Cu PLATING
6. FOR TECHNICAL DATA REFER TO YOUR LOCAL TYCO ELECTRONICS SALES OFFICE
7. ALL DIMENSIONS ARE NOMINAL FOR REFERENCE ONLY UNLESS OTHERWISE STATED

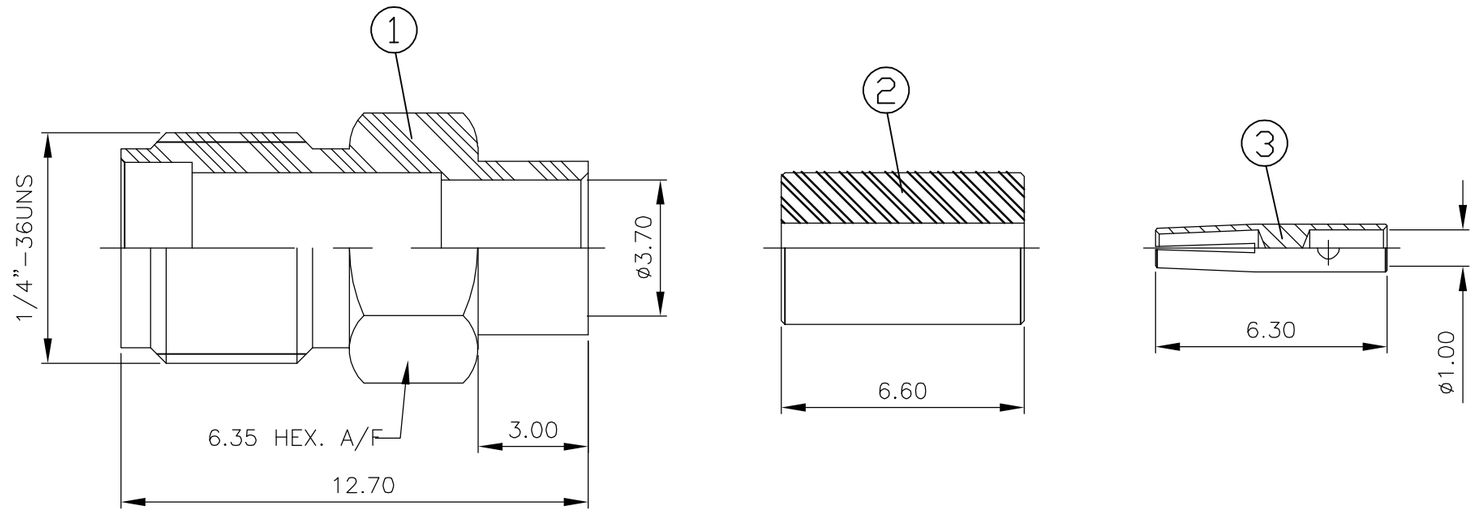

RECOMMENDED
CABLE STRIPPING DIM'S

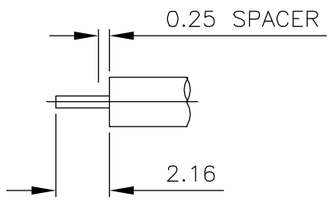

				1	1	1	1	PTFE	INSULATOR	3
				1	1	1	1	BERYLLIUM COPPER (5)	SOCKET	2
				1	1	–	–	BRASS (4)	BODY	1
				–	–	1	1	STAINLESS STEEL (3)	BODY	1
				3--1	3--0	1--1	1--0	MATERIAL	DESCRIPTION	ITEM
				(2)	(1)	(2)	(1)			
QUANTITY PER ASSY								PARTS LIST		

THIS DRAWING IS A CONTROLLED DOCUMENT.

DIMENSIONS: mm

TOLERANCES UNLESS OTHERWISE SPECIFIED:
0 PLC ± –
1 PLC ± –
2 PLC ± –
3 PLC ± –
4 PLC ± –
ANGLES ± –

MATERIAL: SEE TABLE

FINISH: –

DWN R.SMITH 30JAN04
CHK S.PARLOW 30JAN04
APVD F.WHEELER-KING 30JAN04
PRODUCT SPEC 108-3460
APPLICATION SPEC 411-3276
WEIGHT –

tyco Electronics
Tyco Electronics Corporation
Bideford, UK, EX39 4HE

NAME: SMA STRAIGHT JACK DIRECT SOLDER NON CAPTIVE CENTRE CONTACT RG402/U

SIZE	CAGE CODE	DRAWING NO	RESTRICTED TO
A3	00779	C-1478928	–

CUSTOMER DRAWING | SCALE 1:1 | SHEET 1 OF 1 | REV A