NO.	REVISION	DATE
N/A		5/96

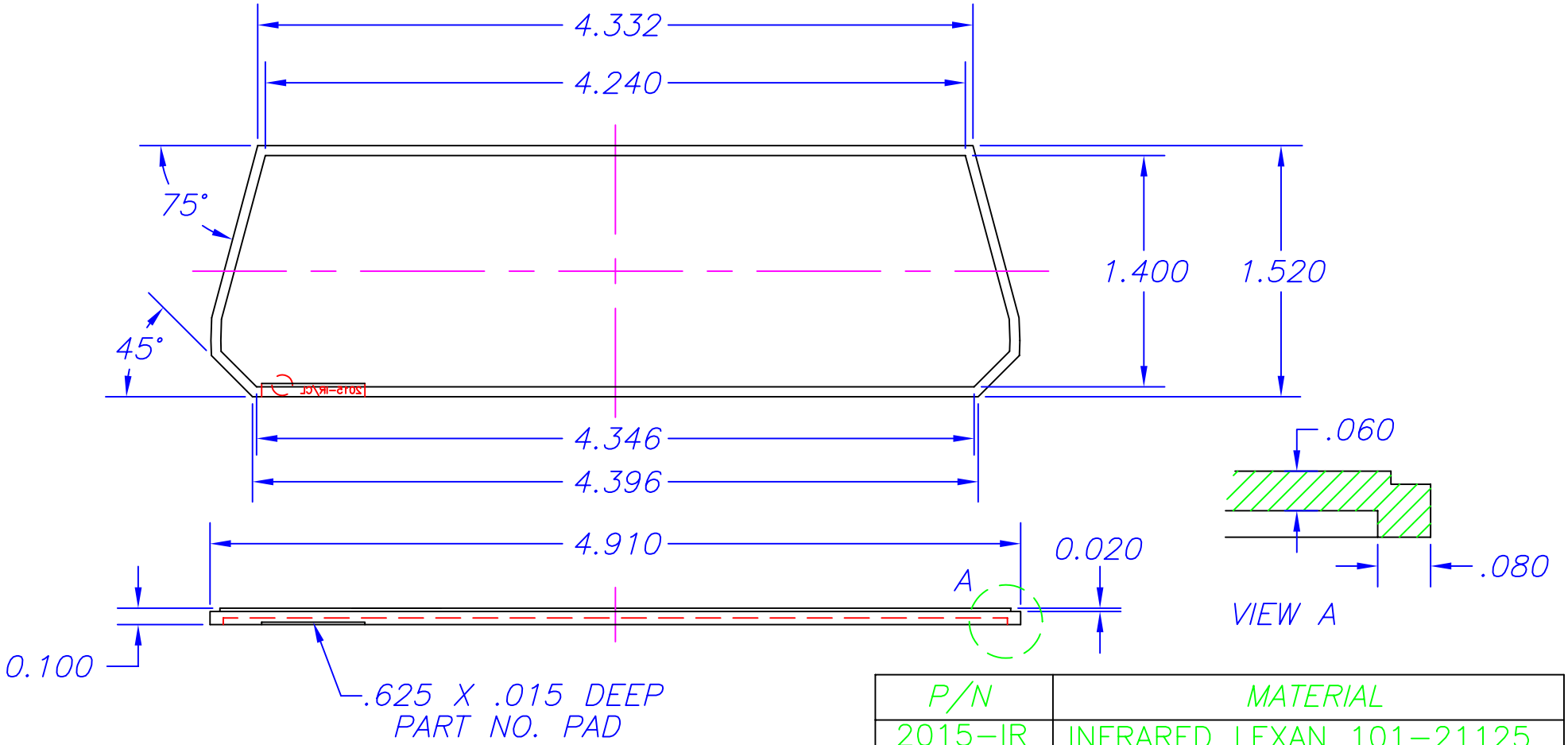

P/N	MATERIAL
2015-IR	INFRARED LEXAN 101-21125
2015-CL	CLEAR TERLUX 2802TR(BASF)

TITLE	A-31 END PANEL IR/CL				DES. D.CHAMBERS	6/93	P/N 2015,IR or CL
TOLERANCE				MAT'L		DRWN.	
DECIMAL		FRAC.	ANG.	SHEET NO. 1	SCALE 1=1	CKD.	
.XX ±.010	.XXX ±.005	±1/64	±1/2°	NO. OF SHTS. 1	DWG NO. A-31IRCL	APPR.	

SERPAC
612 COMMERCIAL AVE., COVINA, CA. 91723
(818) 331-0517 FAX: (818) 331-8584