Features

- Formerly *J.W.Miller* model
- Available in E12 values
- Height of 4.5 mm maximum
- Current rating to 6.35 amps
- Lead free
- RoHS compliant*

Applications

- Input/output of DC/DC converters
- Power supplies for:
  - Portable communication equipment
  - Camcorders
  - LCD TVs
  - Car radios

PM124SH Series - Shielded SMD Power Inductors

Electrical Specifications

Bourns Part No.	Inductance 100 kHz (µH)	Inductance 100 kHz Tol. %	Q Typ.	Test Frequency (MHz)	SRF Typ. (MHz)	RDC Max. (mΩ)	I rms Max. (A)	I sat Typ. (A)
PM124SH-3R9Y-RC	3.9	± 30	14	7.96	39	15.0	6.35	6.20
PM124SH-4R7M-RC	4.7	± 20	16	7.96	33	18.0	6.00	5.60
PM124SH-6R8M-RC	6.8	± 20	14	7.96	34	23.0	5.20	4.70
PM124SH-8R2M-RC	8.2	± 20	10	7.96	32	27.0	4.50	4.30
PM124SH-100M-RC	10	± 20	17	2.52	27	32.0	4.00	4.00
PM124SH-120M-RC	12	± 20	16	2.52	25	38.0	3.80	3.60
PM124SH-150M-RC	15	± 20	16	2.52	22	47.0	3.50	3.20
PM124SH-180M-RC	18	± 20	14	2.52	20	55.0	3.20	3.00
PM124SH-220M-RC	22	± 20	18	2.52	16	67.5	3.00	2.60
PM124SH-270M-RC	27	± 20	16	2.52	15.5	85.0	2.55	2.35
PM124SH-330M-RC	33	± 20	19	2.52	15	97.0	2.30	2.10
PM124SH-390M-RC	39	± 20	14	2.52	14	120.0	2.15	2.00
PM124SH-470M-RC	47	± 20	19	2.52	13	135.0	2.00	1.80
PM124SH-560M-RC	56	± 20	16	2.52	12	170.0	1.80	1.65
PM124SH-680M-RC	68	± 20	19	2.52	11	200.0	1.50	1.50
PM124SH-820M-RC	82	± 20	16	2.52	10	250.0	1.35	1.35
PM124SH-101M-RC	100	± 20	14	0.796	8	300.0	1.25	1.20
PM124SH-121M-RC	120	± 20	12	0.796	7.8	370.0	1.20	1.15
PM124SH-151M-RC	150	± 20	12	0.796	7.5	440.0	1.10	1.05
PM124SH-181M-RC	180	± 20	12	0.796	7.0	550.0	0.98	0.95
PM124SH-221M-RC	220	± 20	12	0.796	6.6	660.0	0.92	0.90
PM124SH-271M-RC	270	± 20	10	0.796	6.0	780.0	0.80	0.80
PM124SH-331M-RC	330	± 20	12	0.796	5.5	950.0	0.75	0.75

General Specifications

Test Voltage ..... 0.1 V
Reflow Soldering .. 230 °C, 50 sec. max.
Operating Temperature
..... -40 °C to +125 °C
(Temperature rise included)
Storage Temperature .. -40 °C to +125 °C
Resistance to Soldering Heat
..... 260 °C for 10 sec.

Materials

Core ..... Ferrite DR and RI
Wire ..... Enameled copper wire 130
Terminal ..... Cu/Ni/Sn
Rated Current
..... Ind. drop 25 % typ. at Isat
Temperature Rise ..... 40 °C max.
at rated Irms
Packaging..... 500 pcs. per reel

Product Dimensions

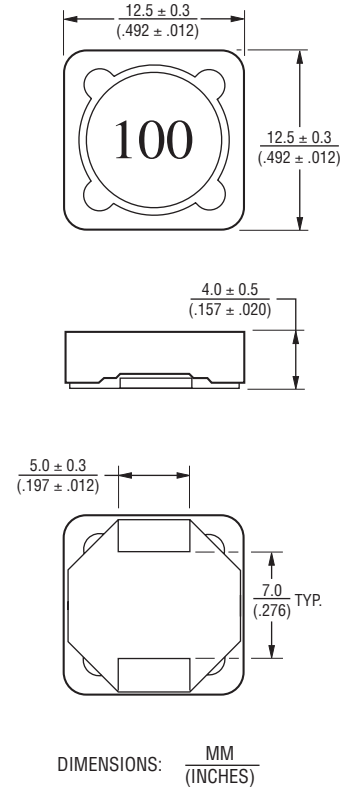

Electrical Schematic

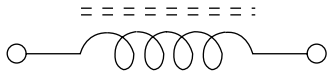

Recommended Layout

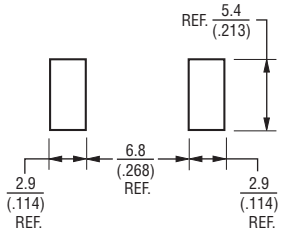

*RoHS Directive 2002/95/EC Jan 27 2003 including Annex.
Specifications are subject to change without notice.
Customers should verify actual device performance in their specific applications

Packaging Specifications

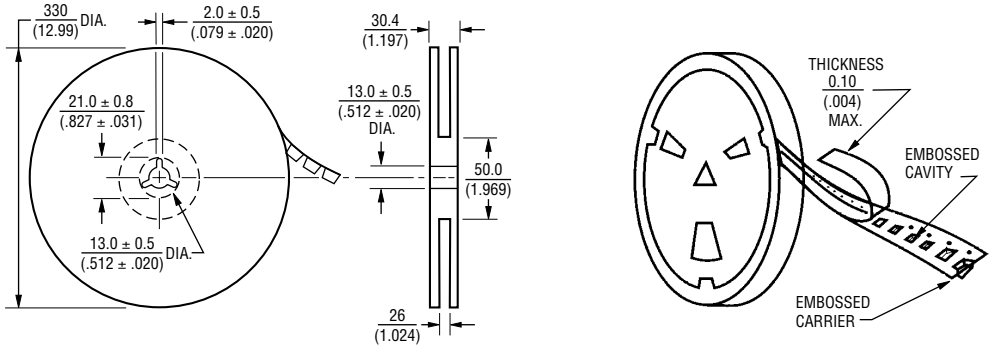

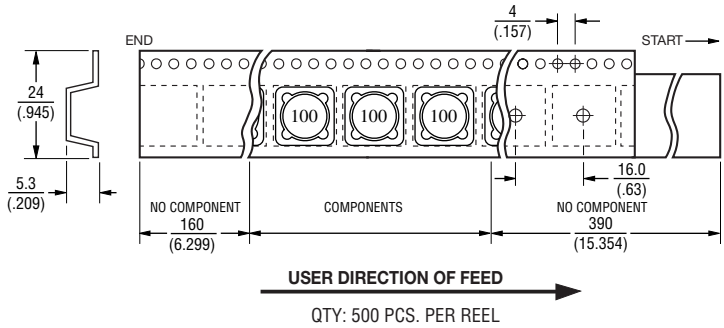

QTY: 500 PCS. PER REEL

DIMENSIONS: MM (INCHES)

Specifications are subject to change without notice.
Customers should verify actual device performance in their specific applications