THIS DRAWING IS UNPUBLISHED. RELEASED FOR PUBLICATION - ,- .
© COPYRIGHT - BY TYCO ELECTRONICS CORPORATION. ALL RIGHTS RESERVED.

LOC	DIST
CM	0

REVISIONS

P	LTR	DESCRIPTION	DATE	DWN	APVD
	D	EC 0G3B 1113 04	30DEC05	BSV	DB
	D1	REVISED PER ECO-10-000443	12JAN10	KK	AEG

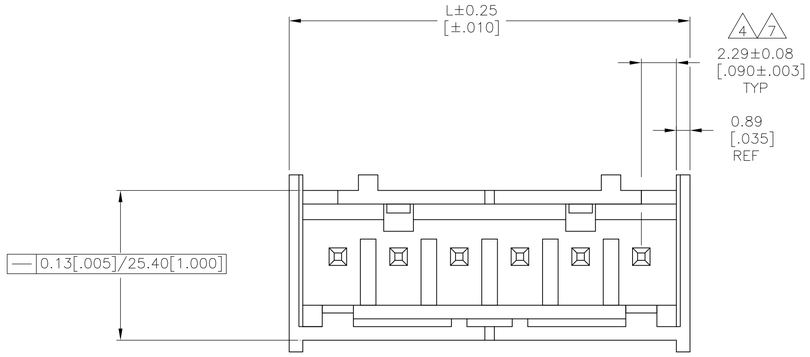

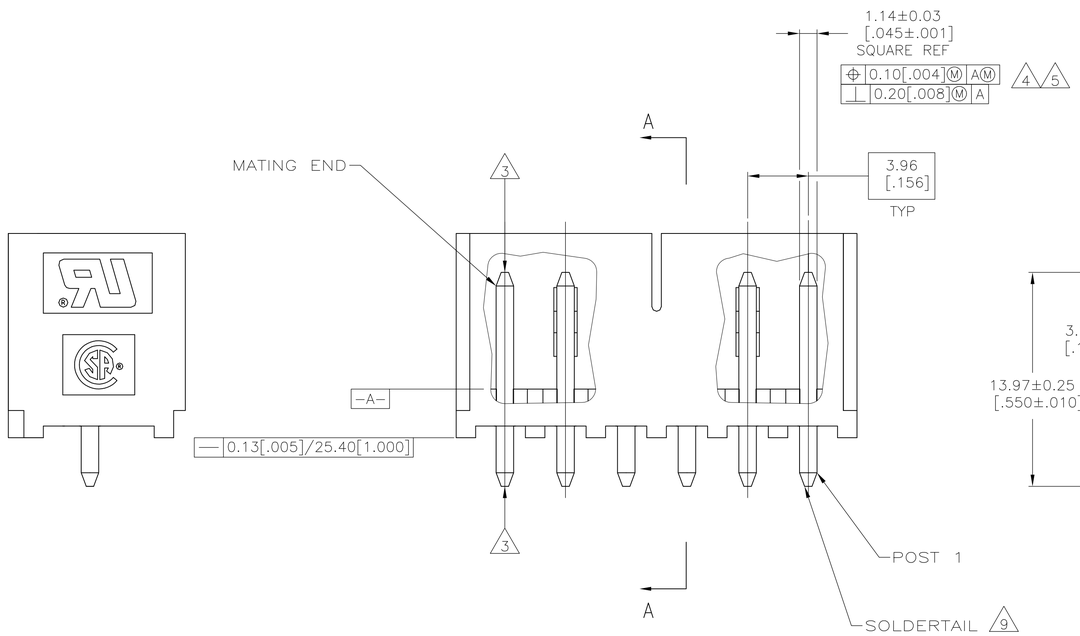

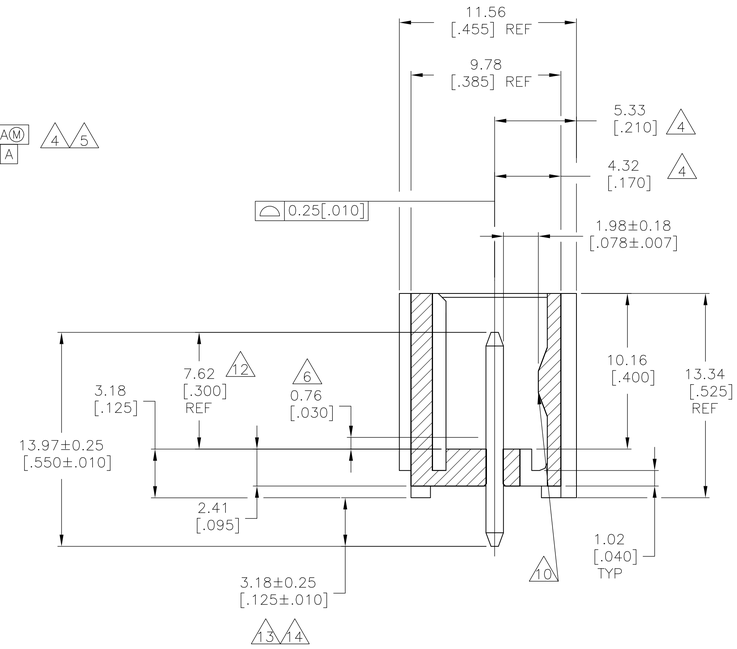

SECTION A—A

1. MATERIAL:
HOUSING – THERMOPLASTIC POLYESTER,GLASS FILLED,UL94-0.
POST – COPPER ALLOY

2. FINISH:
HOUSING – BLACK
POST – SEE NOTES 12, 13 AND 14 FOR PLATING.

3. POST TO WITHSTAND 3LBS (16N) MIN AXIAL FORCE IN THIS DIRECTION WITHOUT DISLODGING.

4. APPLIES AT -A- .

5. APPLIES WHEN HEADER IS STRAIGHT .

6. PLASTIC PROJECTIONS PERMITTED IN THIS ZONE.

7. COORDINATE DIMENSIONS APPLIES FROM CENTER OF ACTUAL FEATURE.

8. SOLDER SIDE OF BOARD IS SHOWN.

9. POST SOLDERTAIL MUST COMPLY WITH AMP SOLDERABILITY SPEC 109-11-2.

10. LATCH DETENT FEATURE APPEARS 1 PLACE ON EACH END OF PART (MAX OF 2 PER PART) ON ALL POSITIONS 4 THRU 12. THE LATCH APPEARS ONLY ONE PLACE ON 2 & 3 POSITION PARTS.

11. DIMENSIONS IN BRACKETS ARE IN INCHES.

12. GOLD PLATE AREA, 0.000381 [.000015] MIN ALL SIDES : OVER NICKEL UNDERPLATE, 0.00127 [.000050] MIN ALL SIDES AND ENTIRE LENGTH OF POST.

13. BRIGHT TIN LEAD (93/7) PLATE AREA 0.00381 – 0.0089 [.000150 – .000350] ALL FOUR SIDES, 3.18 [.125] MIN..

14. MATTE TIN PLATE AREA 0.00381 – 0.0089 [.000150 – .000350] ALL FOUR SIDES, 3.18 [.125] MIN..

15. OBSOLETE PARTS: OBSOLETE CIS STREAMLINING PER D.RENAUD/D.SINISI

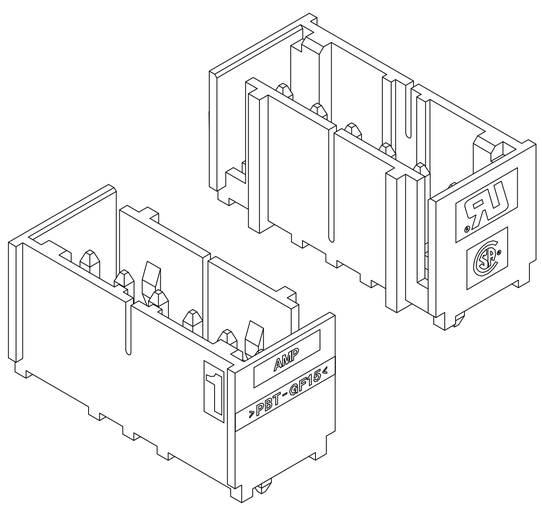

3-DIMENSIONAL MODEL
NTS

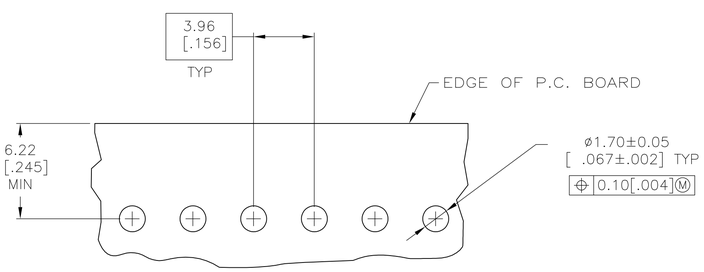

RECOMMENDED MOUNTING HOLE PATTERN
FOR 1.57[.062] THICK P.C. BOARD 8

647139-6 SHOWN

	PLATING	MM	IN	NO OF POSN	PART NUMBER
	12 14	49.94	1.966	12	3-647139-2
		45.97	1.810	11	3-647139-1
		42.01	1.654	10	3-647139-0
		38.05	1.498	9	2-647139-9
		34.09	1.342	8	2-647139-8
		30.12	1.186	7	2-647139-7
		26.16	1.030	6	2-647139-6
		22.20	.874	5	2-647139-5
		18.24	.718	4	2-647139-4
		14.27	.562	3	2-647139-3
		10.31	.406	2	2-647139-2
15 SUPERSEDED BY 3-647139-2	12 13	49.94	1.966	12	~~1-647139-2~~
15 SUPERSEDED BY 3-647139-1		45.97	1.810	11	~~1-647139-1~~
15 SUPERSEDED BY 3-647139-0		42.01	1.654	10	~~1-647139-0~~
15 SUPERSEDED BY 2-647139-9		38.05	1.498	9	~~647139-9~~
15 SUPERSEDED BY 2-647139-8		34.09	1.342	8	~~647139-8~~
15 SUPERSEDED BY 2-647139-7		30.12	1.186	7	~~647139-7~~
		26.16	1.030	6	647139-6
15 SUPERSEDED BY 2-647139-5		22.20	.874	5	~~647139-5~~
15 SUPERSEDED BY 2-647139-4		18.24	.718	4	~~647139-4~~
15 SUPERSEDED BY 2-647139-3		14.27	.562	3	~~647139-3~~
15 SUPERSEDED BY 2-647139-2		10.31	.406	2	~~647139-2~~

L DIM

THIS DRAWING IS A CONTROLLED DOCUMENT.

DIMENSIONS: mm [INCHES]

TOLERANCES UNLESS OTHERWISE SPECIFIED:
0 PLC ± –
1 PLC ± –
2 PLC ± –
3 PLC ± .005
4 PLC ± –
ANGLES ± –

MATERIAL –
FINISH –

METRIC

DWN B. LEWIS 17JUN98
CHK R. SWING 17JUN98
APVD D. CLARK 17JUN98

Tyco Electronics
Tyco Electronics Corporation
Harrisburg, PA 17105-3608

NAME
MTA-156 SHROUDED HEADER
ASSEMBLY,STRAIGHT .045 SQUARE
POST,.000015 GOLD,W/O RETENTION PEG

PRODUCT SPEC –
APPLICATION SPEC –
WEIGHT –

SIZE	CAGE CODE	DRAWING NO	RESTRICTED TO
A1	00779	C-647139	–

CUSTOMER DRAWING | SCALE 5:1 | SHEET 1 OF 1 | REV D1

AMP 4805 REV 31MAR2000