# HK Time Totalizer

***Totalizes running time of electrically operated equipment... synchronous motor driven models for display of hours, minutes, or seconds***

RECOGNIZED CERTIFIED



The HK5 series totalizes the "ON" or running time of electrically operated equipment. Its features include:

- Large, easy to read digits
- Dust proof dial cover
- Maintenance free
- High impact plastic case
- Can be mounted in any position

## OPERATION

The Eagle Signal brand HK5 series time totalizer has a synchronous motor which drives a set of digit readout wheels to indicate the total time the unit is energized. Six digit-wheels, including a 1/10 digit on hours and minutes, provide a fine, wide range of time measurement. The HK5 features a front mounted reset wheel. It can be reset to zero at any time during its operation.

## SPECIFICATIONS

**Time Ranges:**
**Non-Reset**

| Sym. | Time Range |
|---|---|
| HK400 | 99999.9 Min. |
| HK410 | 99999.9 Hr. |
| HK420 | 999999 Sec. |

**Reset**

| Sym. | Time Range |
|---|---|
| HK500 | 9999.9 Min. |
| HK510 | 9999.9 Hr. |
| HK520 | 99999 Sec. |

**Voltage/Frequency:** 120V (+10, -15%), 50/60 Hz
240V (+10, -15%), 50/60 Hz

**Burden:** 3W max.

**Temperature Range:** 0˚ to 140˚F (-17˚ to +60˚C)

**Agency Approvals:** UL Recognition E59290
CSA Certification LR27967

## MOUNTING

Requires 2 3/8 diameter panel cutout for mounting. 1/2 maximum mounting panel thickness.

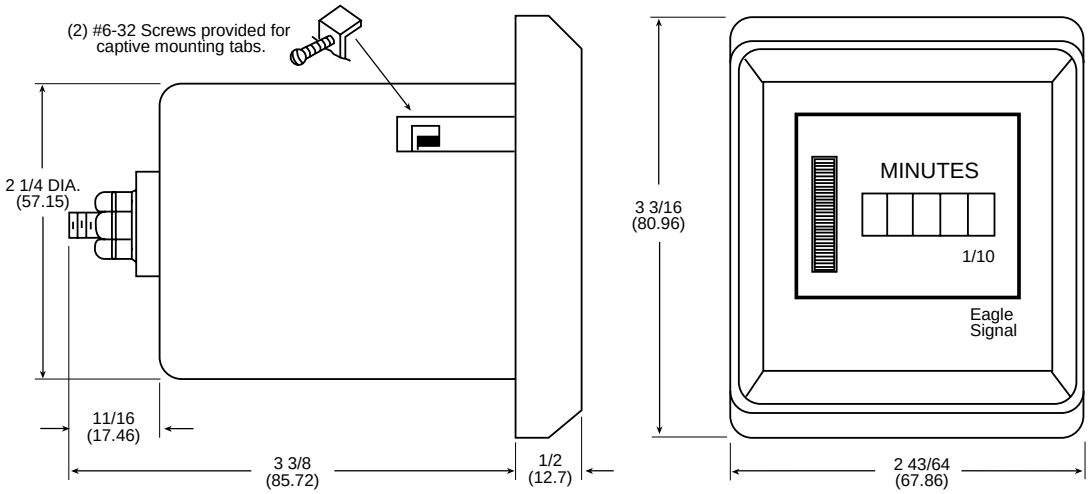


CAUTION: When resetting the HK5 unit, adjust odometer to position 00000 at top of window, as shown.

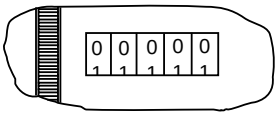


**Typcial Applications:**

- Electronic Equipment
- Computers and Office Machines
- Machine Tool Lubrication
- Maintenance Programs
- Industrial Ovens
- Electrical Equipment Rental
- Industrial Cost Analysis
- Nuclear Control Systems
- Recording Machine Down Time
- Radio Transmitters

## ENCLOSURES

| Model No. | Description |
|---|---|
| **1701-0673** | Surface Mounting Box NEMA 1 |

## ACCESSORIES

| Model No. | Description |
|---|---|
| **HK500-07** | Key Lock Cover |

## ORDERING INFORMATION

Consult Customer Service for availability of other voltages and frequencies.

**HK 4 20 A6**

| Sym. | Description |
|---|---|
| 4* | Non-Reset |
| 5 | Reset |

*HK420 not available in A5 or B5 versions.

| Sym. | Description |
|---|---|
| 00 | Minutes |
| 10 | Hours |
| 20 | Seconds |

| Sym. | Description |
|---|---|
| A5 | 120V, 50 Hz |
| A6 | 120V, 60 Hz |
| B5 | 240V, 50 Hz |
| B6 | 240V, 60 Hz |