Harmony™ 9001K/SK/KX 30 mm push buttons

Catalog
2011

Schneider Electric™

Contents

Harmony™ 9001K/SK/KX 30 mm push buttons

Introduction 4

9001K heavy-duty operators with chrome-plated bezels:

Product range 5

Specifications 7

References

- Push buttons and mushroom operators 10
- Multi-function operators 12
- Selector switches 13
- Pilot lights 17
- Specialty operators 18
- Contact blocks 20
- Light modules 24
- Legend plates 25
- Accessories 27
- Replacement parts 29

Dimensions 30

9001SK corrosion-resistant operators with black plastic bezels:

Product range 36

Specifications 38

References

- Push buttons and mushroom operators 41
- Multi-function operators 43
- Selector switches 44
- Pilot lights 48
- Specialty operators 49
- Contact blocks 50
- Light modules 54
- Legend plates 55
- Accessories 57
- Replacement parts 59

Dimensions 60

9001KX multi-function operators with chrome-plated square-head bezels:

Product range 66

Specifications 67

References

- Push buttons with contacts 70
- Push buttons without contacts 71
- Selector switches 72
- Contact blocks 72
- Pilot lights 73
- Legend plates 74
- Accessories 75

Dimensions 76

Index 78

Harmony™ 9001K/SK/KX 30 mm push buttons

Introduction

Schneider Electric's Harmony™ 9001 30 mm push buttons, pilot lights, selector switches and mushroom head operators provide robust and reliable solutions for a wide range of heavy industry applications.

- **9001K** operators are rugged and include chrome-plated bezels. (See page 5.)
- **9001SK** operators include black plastic bezels for corrosion-resistant applications. (See page 36.)
- **9001KX** operators include chrome-plated square bezels and provide multi-function operation. (See page 66.)

Product features:

- Heavy duty, oil-tight, dust-tight, and water-tight without boots. Most units are IP66 rated and are UL types 4, 4X and 13.
- FINGERSAFE™ contact blocks and light modules for improved safety
- Interchangeable light modules, contact blocks, color caps, pilot light lenses and mushroom heads reduce inventory
- Integrated earth ground connection (no ground wires required)
- Easy installation with octagonal ring nut
- Metal or plastic legend plates

Contact block features:

- Clear window for status of contact operation and troubleshooting
- Color coded for easy identification
- Single screw mounting for quick installation
- Side-by-side and/or stacked mounting to minimize enclosure space requirements

Light module features:

- Low-cost incandescent lamps or energy-efficient, long-life LED lamps
- Wide range of voltages from 24V to 600V

All products are:

- UL listed and CSA certified
- CE declaration of conformity
- RoHS compliant

Harmony™ 9001K/SK/KX 30 mm push buttons

9001K – Complete units

Complete units

Contact functions

Push buttons, spring return

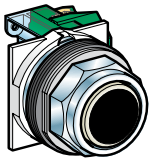

Full guard
9001KR1●●● See page 10

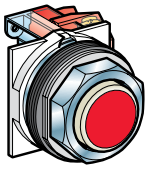

No guard
9001KR3●●● See page 10

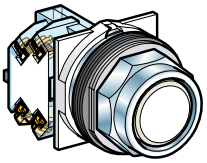

Extended guard
9001KR2●●● See page 10

Mushroom head push buttons

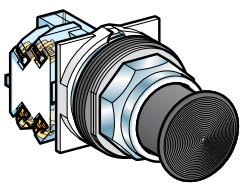

Spring return 1-3/8 or 2-1/4 in (35 or 57 mm)
9001KR2●●H13 See page 10

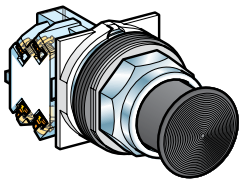

Push-pull 1-5/8 in (41 mm)
9001KR●●● See page 10

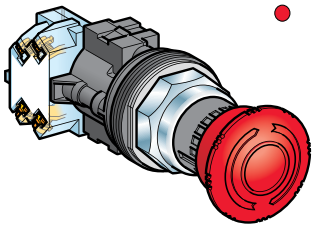

Turn-to-release, trigger action
9001KR16 *(1)* See page 12

Selector switches, key switches and joystick controllers

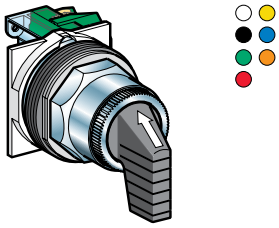

Selector switches
9001KS●●FBH●● See pages 13 to 15

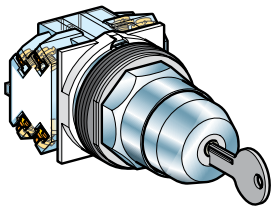

Key switches
9001KS●●K●H●● See pages 13 to 15

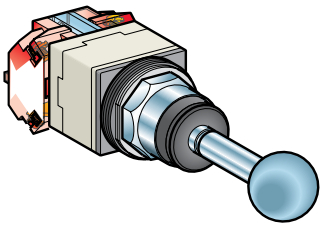

Joystick controllers
9001K●●H● See page 18

Light functions

Pilot lights

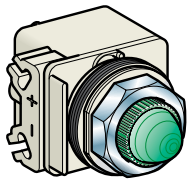

BA 9s base mounted super bright LED
9001KP●●● See page 17

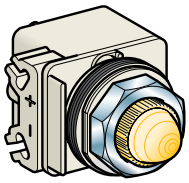

BA 9s incandescent bulb
9001KP●●● See page 17

(1) Complies with EN418/ISO13850 standards for Emergency Stop push buttons when used with circular Legend Plate 9001KN8330 (90 mm diameter) or 9001KN9330 (60 mm diameter). See page 26.

Harmony™ 9001K/SK/KX 30 mm push buttons

9001K – Complete units, components and accessories

Complete units

Combined contact and light functions

Illuminated push buttons, spring return

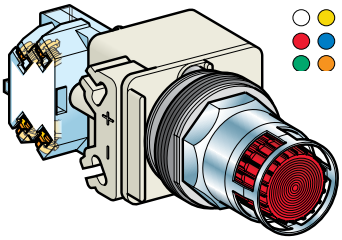

Full guard, super bright LED

9001K●L●●● See page 11

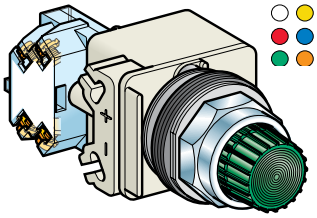

No guard

9001K2L●●● See page 11

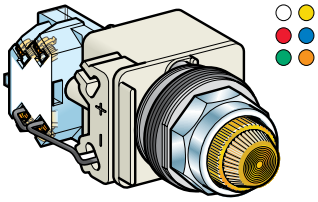

Push-to-test, no guard, super bright LED

9001KT●●●31 See page 11

1-5/8 in (41 mm) mushroom head illuminated push buttons, super bright LED

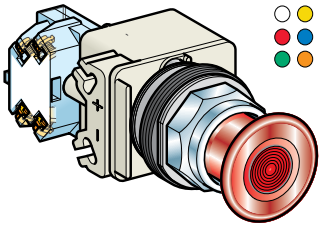

2-Position, push-pull

9001KR9P●●● See page 12

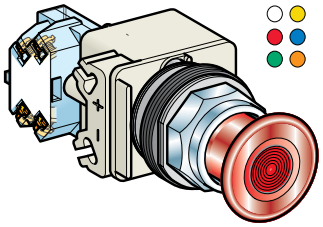

3-Position, push-pull

9001KR8P●●● See page 12

Separate components and accessories

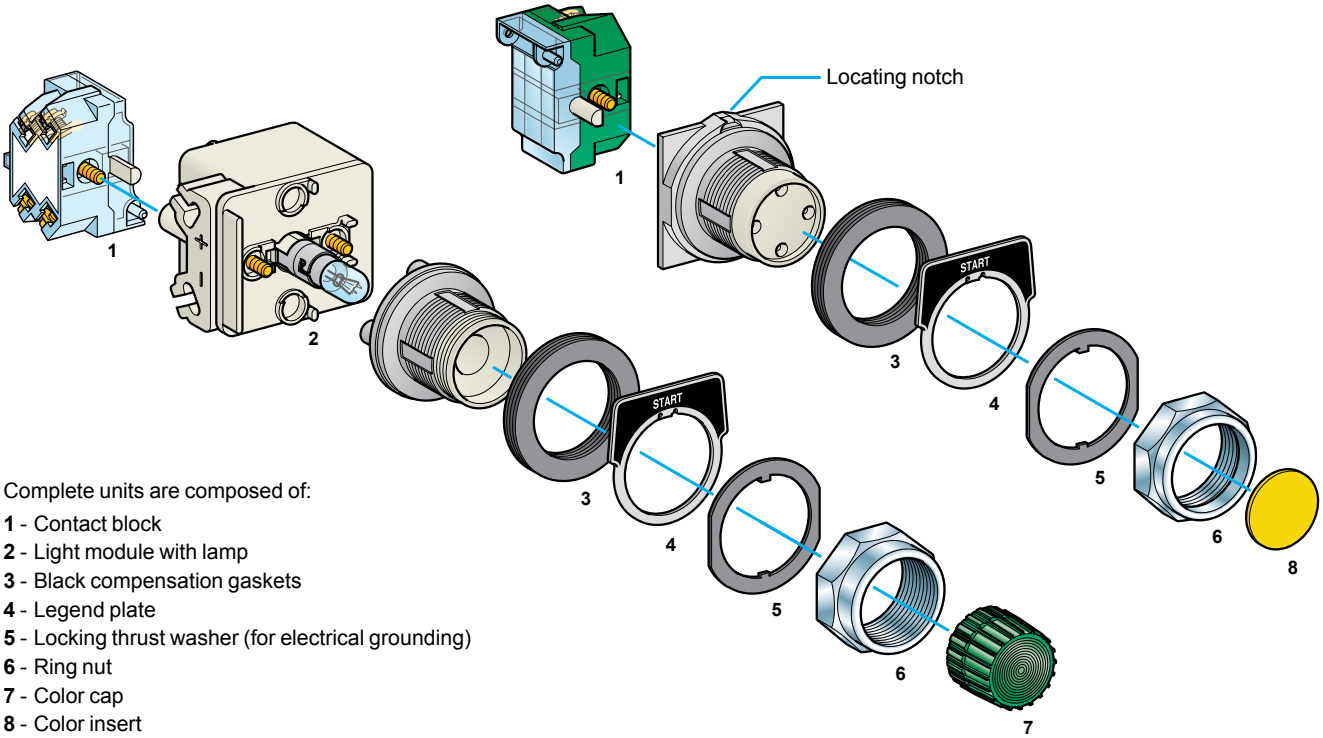

Complete units are composed of:

1 - Contact block
2 - Light module with lamp
3 - Black compensation gaskets
4 - Legend plate
5 - Locking thrust washer (for electrical grounding)
6 - Ring nut
7 - Color cap
8 - Color insert

Specifications: page 7
References: page 10
Dimensions: page 30
Mounting: page 31

Schneider Electric

Harmony™ 9001K/SK/KX 30 mm push buttons

9001K

Environmental specifications

Conforming to standards	CE Marked		EN/IEC 60947-1, EN/IEC 60947-5-1, EN/IEC 60947-5-4, JIS C 4520 and 852, UL 508, CSA C22-2 n° 14, CE marked, RoHS compliant
Product certifications	File E78403 CCN NKCR / File LR25490 Class 3211-03		UL File E78403, CCN NKCR and CSA File LR25490, Class 3211-03
Protective treatment standard version			"TC"
Ambient air temperature around the device	Storage	**°F (°C)**	-40 to +158 (-40 to +70)
	Operation	**°F (°C)**	-13 to +158 (-25 to +70)
Vibration resistance	Conforming to IEC 60068-2-6		Frequency: 2 to 500 Hz: 7gn Ford Standard EA-1
Shock resistance	Conforming to IEC 60068-2-27		Half sine wave: 50 gn
Electric shock protection	Conforming to IEC 61140		Class II
Degree of protection	Conforming to EN/IEC 60529		IP 66
	Conforming to NEMA		Types 1, 2, 3, 3R, 4, 12 and 13
Mechanical life (in millions of operating cycles)	Push buttons, spring return		5
	Illuminated push buttons		5
	Selector switches and key switches		0.5
Mounting position			All positions

Electrical characteristics of contact blocks

Rated operational characteristics	∿ AC-15		3 A, 240 V			
	⎓ DC-13		0.55 A, 125 V			
Rated insulation voltage	Conforming to EN/IEC 60947-1	**V**	Ui = 250 degree of pollution 3 (except pilot lights with incandescent bulb: degree of pollution 2)			
Rated impulse withstand voltage	Conforming to EN/IEC 60947-1	**kV**	Uimp = 2.5			
Contact material	Normal environment and usage		Silver alloy			
Contact operation	"N/C" ou "N/O"		Slow break			
Positive operation	Conforming to EN/IEC 60947-5-1	**N**	N/C contact(s) with positive opening operation			
Short-circuit protection	Conforming to EN/IEC 60947-5-1	**A**	Cartridge fuse mounted upstream: 10			
Cabling capacity (9001KA contact blocks and 9001KM light modules)	Conforming to EN/IEC 60947-1	**mm²** **mm²**	Screw clamp terminals (cross headedslotted screw) Mini: 1 x 0.22 Maxi: 2 x 1.5 Recommended tightening torque: 0.8 N.m (10 in-lbs)			
Thermal current	Ith	**A**	10			
Maximum operation current	a.c. supply: utilization category AC-15 NEMA A600		Contact making capacity			
		V	120	240	480	600
		A	60	30	15	12
		VA	7200	7200	7200	7200
			Breaking capacity			
		V	120	240	480	600
		A	6	3	1.5	1.2
		VA	720	720	720	720
	d.c.supply: utilization category DC-13 NEMA Q600		Contact making capacity and breaking capacity			
		V	125	250	600	
		A	0.55	0.27	0.1	

Basic Operators
(For Color Caps, Mushroom Buttons, Knobs, Selector Switch Cams, Contact Blocks, Light Modules and Legend Plates, see page 21.)

Description	UL Types/NEMA Types 4, 13
Non Illuminated Push Button (Full Guard)	**9001KR1**
Non Illuminated Push Button (Extended Guard)	**9001KR2**
Non Illuminated Push Button (No Guard)	**9001KR3**
Non Illuminated Push Button (Mushroom Button/screw on)	**9001KR20**
Non Illuminated Dual Push Button (Momentary)	**9001KR6**
Non Illuminated Dual Push Button (Momentary Interlocked)	**9001KR67**
Non Illuminated Dual Push Button (Maintained Interlocked)	**9001KR7**
Momentary Pull - Maintained Neutral - Momentary Push	**9001KR8** *(1) (4)*
Maintained Pull - Maintained Push	**9001KR9** *(1) (4)*
Illuminated Push Button (Full Guard - Plastic Top)	**9001K1L** *(2)*
Illuminated Push Button and Push-to-test (No Guard)	**9001K2L** *(2) (3)*
Illuminated Push Button (Full Guard - Metal Top)	**9001K3L** *(2)*
Standard Pilot Light	**9001KP**
2-Position Selector Switch	**9001KS1** *(1)*, **9001KS2** *(1)*, **9001KS3** *(1)*
3-Position Selector Switch	**9001KS4** *(1)*, **9001KS5** *(1)*, **9001KS6** *(1)*, **9001KS7** *(1)*
4-Position Selector Switch	**9001KS8** *(1)*
Trigger-Action Emergency Stop	**9001KR16** *(1)*

(1) Operator can be converted to an illuminated operator by removing the liner (6509704901) and adding a light module.
(2) Operator can be converted to a non-illuminated operator by adding liner (6509704901).
(3) Operator includes jumper wires for push-to-test conversion.
(4) These operators can be supplied with 1-3/8" or 2-1/4" dia. mushroom buttons. For 1-3/8" Add •20 to reference number. The • refers to the color chosen - see page 10. For 2-1/4": Add •21 to reference number. The • refers to the color chosen - see page 10. Voids UL and NEMA Type 6 Rating.

Non Hazardous Locations:

File CCN E42259 NKCR — File Class LR25490 3211 03 — Marking

Hazardous Locations (Reed contact blocks, see page 23):

File CCN E10054 NOIV — File Class LR26817 3218 02 — Marking

9001K Operator Materials:

Push Button and Push-to-test Pilot Light (9001KR and 9001KT)

Gasket – Nitrile
Seal – Nitrile
Seal Cap – Amorphous Acetal
Decorative Ring – Polyester Film
Compensating Washer – Polypropylene
Lock Ring – Amorphous Nylon
Stem – Thermoplastic Polyester
Base Cap – Thermoplastic Polyester
Knob – Polycarbonate
Liner – Polypropylene
Hold Down Spring for 9001K-15 – Neoprene
Operator Base – Zinc
Operator Base (9001KR8) – Polyester
Return Spring – Music Wire or Stainless Steel (9001KT only)
Ring Nuts – Aluminum or Zinc
Springkeeper – Steel
Locking Thrust Washer – Zinc
Color Insert – Polyethylene
Boots – Silicone

Selector Switch (9001KS)

Gasket – Nitrile
Seal – Nitrile
Bearing Washer – Polyester Film
Compensating Washer – Polypropylene
Cam Follower – Delrin 100
Liner – Polypropylene
Knob – Polycarbonate
Cam Carrier – Amorphous Nylon
Cam Rotor – Celenex 3300
Cam Profile– Delrin 100
Operator Base – Zinc
Detent Spring – Stainless Steel
Ring Nuts – Aluminum or Zinc
Seal keeper – Stainless Steel
Locking Thrust Washer – Zinc

Pilot Light (9001KP)

Gasket – Nitrile
Compensating Washer – Polypropylene
Lens – Glass or Polycarbonate
Light Module Housing – Thermoplastic Polyester
Operator Base – Zinc
Glass Lens Ring – Anodized Aluminum

Contact Block And Light Module Materials:

Contact Block (9001KA)

Housing – Amorphous Nylon
Contact Slider – Phenolic, Nylon or Acetal
Terminal – Steel
Saddle Clamp – Steel
Spring – Stainless Steel
Contacts – Silver and Copper
Blade – Beryllium Copper
Mounting Screw – Steel
Label – Paper

Light Module (9001KM)

Housing – Thermoplastic Polyester
Socket – Steel
Terminal – Steel with Tin Plate
Saddle Clamp – Steel
Translating Pin – Polycarbonate
Transformer – Thermoplastic Polyester, Steel, Copper, Polyvinyl Chloride, Polytetrafluorethylene, Acetate, Paper
Lamp Spring – Tin Plated Music Wire

Harmony™ 9001K/SK/KX 30 mm push buttons

9001K – Push buttons and mushroom operators

Note: When ordering, add prefix "9001" to the reference.

Non-Illuminated Momentary Push Button Operators
For use in hazardous locations, see page 23.
Contact blocks and legend plate not included unless otherwise noted.

Description		Color	Operator with 1 N.O. and 1 N.C. Contact (KA1)	Operator with 1 N.O. Contact (KA2)	Operator with 1 N.C. Contact (KA3)	Operator Only with No Contacts
9001KR1B	Full Guard	Black	**KR1BH13**	**KR1BH5**	**KR1BH6**	**KR1B**
		Red	**KR1RH13**	**KR1RH5**	**KR1RH6**	**KR1R**
		Green	**KR1GH13**	**KR1GH5**	**KR1GH6**	**KR1G**
		Universal *(1)*	**KR1UH13**	**KR1UH5**	**KR1UH6**	**KR1U**
		Other *(2)*	**KR1■H13**	**KR1■H5**	**KR1■H6**	**KR1■**
9001KR3B	No Guard	Black	**KR3BH13**	**KR3BH5**	**KR3BH6**	**KR3B**
		Red	**KR3RH13**	**KR3RH5**	**KR3RH6**	**KR3R**
		Green	**KR3GH13**	**KR3GH5**	**KR3GH6**	**KR3G**
		Universal *(1)*	**KR3UH13**	**KR3UH5**	**KR3UH6**	**KR3U**
		Other *(2)*	**KR3■H13**	**KR3■H5**	**KR3■H6**	**KR3■**
9001KR2B	Extended Guard	Black	**KR2BH13**	**KR2BH5**	**KR2BH6**	**KR2B**
		Red	**KR2RH13**	**KR2RH5**	**KR2RH6**	**KR2R**
		Green	**KR2GH13**	**KR2GH5**	**KR2GH6**	**KR2G**
		Universal *(1)*	**KR2UH13**	**KR2UH5**	**KR2UH6**	**KR2U**
		Other *(2)*	**KR2■H13**	**KR2■H5**	**KR2■H6**	**KR2■**
9001KR4B	1-3/8 in (35 mm) Diameter Mushroom Button	**Snap-In Plastic Mushroom Button**				
		Black	**KR4BH13**	**KR4BH5**	**KR4BH6**	**KR4B**
		Red	**KR4RH13**	**KR4RH5**	**KR4RH6**	**KR4R**
		Red *(3)*	**KR4R05H13**	**KR4R05H5**	**KR4R05H6**	**KR4R05**
		Green	**KR4GH13**	**KR4GH5**	**KR4GH6**	**KR4G**
		Other *(4)*	**KR4★H13**	**KR4★H5**	**KR4★H6**	**KR4★**
		Screw-On Plastic Mushroom Button with Set Screw				
		Black	**KR24BH13**	**KR24BH5**	**KR24BH6**	**KR24B**
		Red	**KR24RH13**	**KR24RH5**	**KR24RH6**	**KR24R**
		Green	**KR24GH13**	**KR24GH5**	**KR24GH6**	**KR24G**
		Other *(4)*	**KR24★H13**	**KR24★H5**	**KR24★H6**	**KR24★**
9001KR24BM	1-1/2 in (40 mm) Diameter Mushroom Button	**Screw-in Metal Mushroom Button with Set Screw**				
		Black	—	—	—	**KR24BM**
		Red	—	—	—	**KR24RM**
		Green	—	—	—	**KR24GM**
9001KR5B	2-1/4 in (57 mm) Diameter Mushroom Button	**Snap-In Plastic Mushroom Button**				
		Black	**KR5BH13**	**KR5BH5**	**KR5BH6**	**KR5B**
		Red	**KR5RH13**	**KR5RH5**	**KR5RH6**	**KR5R**
		Red *(3)*	**KR5R05H13**	**KR5R05H5**	**KR5R05H6**	**KR5R05**
		Green	**KR5GH13**	**KR5GH5**	**KR5GH6**	**KR5G**
		Other *(4)*	**KR5★H13**	**KR5★H5**	**KR5★H6**	**KR5★**
		Screw-On Plastic Mushroom Button with Set Screw				
		Black	**KR25BH13**	**KR25BH5**	**KR25BH6**	**KR25B**
		Red	**KR25RH13**	**KR25RH5**	**KR25RH6**	**KR25R**
		Green	**KR25GH13**	**KR25GH5**	**KR25GH6**	**KR25G**
		Other *(4)*	**KR25★H13**	**KR25★H5**	**KR25★H6**	**KR25★**
9001KR25BM	2-3/8 in (60 mm) Diameter Mushroom Button	**Screw-in Metal Mushroom Button with Set Screw**				
		Black	—	—	—	**KR25BM**
		Red	—	—	—	**KR25RM**
		Green	—	—	—	**KR25GM**

(1) The universal push button operators contain one each of the following color inserts: black, red, green, yellow, orange, blue and white.
(2) Replace ■ with the color code as chosen from the color code table below.
(3) Knob has the words "Emergency Stop" in raised letters highlighted in white for readability.
(4) Replace ★ with the color code as chosen from the color code table below.

Color Codes

Color	KR1, 2, 3 Place Color Code in Reference ■	KR4, 5, 24, 25 Place Color Code in Reference ★
Blue	L	L
Yellow	Y	Y
White	W	—
Orange	S	S
Gray	E	—

To select and order Contact Blocks, Light Modules, Knobs, and Accessories, see pages 20 to 29.

Product range: page 5 | Specifications: page 7 | Dimensions: page 30 | Mounting: page 31

Schneider Electric

Harmony™ 9001K/SK/KX 30 mm push buttons

9001K – Push buttons and mushroom operators

Note: When ordering, add prefix "9001" to the reference.

Illuminated Momentary Push Button Operators
For use in hazardous locations, see page 23.
Legend plate and contact block not included unless otherwise noted.

Description		Voltage and Frequency	Style	With Red Color Cap and 1 N.O. and 1 N.C. Contact (KA1) *(2)*	With Green Color Cap and 1 N.O. and 1 N.C. Contact (KA1) *(2)*	With Other Color Cap Without Contact Block *(1) (2) (5)*
9001K1L1	Full Guard Illuminated Push Button Clear Plastic Top	110–120 V, 50–60 Hz	Transformer	**K1L1RH13**	**K1L1GH13**	**K1L1▼**
		220–240 V, 50–60 Hz	Transformer	**K1L7RH13**	**K1L7GH13**	**K1L7▼**
		24–28 Vac/Vdc	Full Voltage	**K1L35RH13**	**K1L35GH13**	**K1L35▼**
		For other voltages *(2)*	Transformer or Flashing	**K1L■RH13**	**K1L■GH13**	**K1L■▼**
			Full Voltage	**K1L■RH13**	**K1L■GH13**	**K1L■▼**
			Resistor or Neon *(3)*	**K1L■RH13**	**K1L■GH13**	**K1L■▼**
			LED *(4)*	**K1L■RH13**	**K1L■GH13**	**K1L■▼**
9001K3L1	Full Guard Illuminated Push Button Metal Top	110–120 V, 50–60 Hz	Transformer	**K3L1RH13**	**K3L1GH13**	**K3L1▼**
		220–240 V, 50–60 Hz	Transformer	**K3L7RH13**	**K3L7GH13**	**K3L7▼**
		24–28 Vac/Vdc	Full Voltage	**K3L35RH13**	**K3L35GH13**	**K3L35▼**
		For other voltages *(2)*	Transformer or Flashing	**K3L■RH13**	**K3L■GH13**	**K3L■▼**
			Full Voltage	**K3L■RH13**	**K3L■GH13**	**K3L■▼**
			Resistor or Neon *(3)*	**K3L■RH13**	**K3L■GH13**	**K3L■▼**
			LED *(4)*	**K3L■RH13**	**K3L■GH13**	**K3L■▼**
9001K2L1	No Guard Illuminated Push Button	110–120 V, 50–60 Hz	Transformer	**K2L1RH13**	**K2L1GH13**	**K2L1▼**
		220–240 V, 50–60 Hz	Transformer	**K2L7RH13**	**K2L7GH13**	**K2L7▼**
		24–28 Vac/Vdc	Full Voltage	**K2L35RH13**	**K2L35GH13**	**K2L35▼**
		For other voltages *(2)*	Transformer or Flashing	**K2L■RH13**	**K2L■GH13**	**K2L■▼**
			Full Voltage	**K2L■RH13**	**K2L■GH13**	**K2L■▼**
			Resistor or Neon *(3)*	**K2L■RH13**	**K2L■GH13**	**K2L■▼**
			LED *(4)*	**K2L■RH13**	**K2L■GH13**	**K2L■▼**
9001K2LR20	1-3/8 in (35 mm) Illuminated Screw-On Plastic Mushroom (no Set Screw)	110–120 V, 50–60 Hz	Transformer	**K2L1R20H13**	**K2L1G20H13**	**Order K2L■▼ above *(6)***
		220–240 V, 50–60 Hz	Transformer	**K2L7R20H13**	**K2L7G20H13**	
		24–28 Vac/Vdc	Full Voltage	**K2L35R20H13**	**K2L35G20H13**	
		For other voltages *(2)*	Transformer or Flashing	**K2L■R20H13**	**K2L■G20H13**	
			Full Voltage	**K2L■R20H13**	**K2L■G20H13**	
			Resistor or Neon *(3)*	**K2L■R20H13**	**K2L■G20H13**	
			LED *(4)*	**K2L■R20H13**	**K2L■G20H13**	
9001K2LR21	2-1/4 in (57 mm) Illuminated Screw-On Plastic Mushroom (no Set Screw)	110–120 V, 50–60 Hz	Transformer	**K2L1R21H13**	**K2L1G21H13**	**Order K2L■▼ above *(6)***
		220–240 V, 50–60 Hz	Transformer	**K2L7R21H13**	**K2L7G21H13**	
		24–28 Vac/Vdc	Full Voltage	**K2L35R21H13**	**K2L35G21H13**	
		For other voltages *(2)*	Transformer or Flashing	**K2L■R21H13**	**K2L■G21H13**	
			Full Voltage	**K2L■R21H13**	**K2L■G21H13**	
			Resistor or Neon *(3)*	**K2L■R21H13**	**K2L■G21H13**	
			LED *(4)*	**K2L■R21H13**	**K2L■G21H13**	

(1) These operators can be ordered complete with contact blocks. For maximum block usage, see page 22. Add the "H" number chosen from page 22 to the end of the operator reference number and add the cost of the "H" number to the operator cost.
(2) Replace ■ with the voltage assembly code as chosen from the tables on page 24. Example: K2L■ with 240 Vac/Vdc = K2L25
(3) On neon light modules, use clear color caps only.
(4) The cap must be the same color as the LED light module chosen, e.g., for red LED, use red color cap.
(5) Replace ▼ with the color code as chosen from the color cap table below. Example: K2L25▼ with a blue 13⁄8 mushroom button = K2L25L20
(6) The only difference between a no guard (K2L) operator and mushroom button operator is the color cap.

Color Caps

Color	Color Codes		
	▼ K1L, K2L, K3L	▼ 1-3/8 in Mushroom	▼ 2-1/4 in Mushroom
Red	R	R20	R21
Green	G	G20	G21
Blue	L	L20	L21
Yellow	Y	Y20	Y21
White	W	W20	W21
Clear	C	C20	C21
Amber	A	A20	A21

To select and order Contact Blocks, Light Modules, Knobs, and Accessories, see pages 20 to 29.

Harmony™ 9001K/SK/KX 30 mm push buttons

9001K – Multi-function operators

Note: When ordering, add prefix "9001" to the reference.

30 mm Multi-function Operators

Non-Illuminated Push-Pull Mushroom Operators

Description *(1)*		Color	With 2 N.C. Contacts (1 KA3, 1 KA5) *(2)*	With 1 N.O. & 1 N.C. Contact (1 KA1) *(2)*	Without Contacts *(2) (6)*
9001KR9R94H13 Set Screw Style	3-Position Momentary Pull, Maintained Neutral, Momentary Push 1-5/8 in (40 mm) Screw-On Plastic Mushroom (no Set Screw) *(8)*	Red	**KR8RH25**	**—**	**KR8R**
		Green	**KR8GH25**	**—**	**KR8G**
		Other	**KR8▲H25**	**—**	**KR8▲**
	2-Position, Maintained Pull, Maintained Push, 1-5/8 in (40 mm) Screw-On Plastic Mushroom (no Set Screw) *(9)*	Red *(7)*	**—**	**KR9RH13**	**KR9R**
		Green	**—**	**KR9GH13**	**KR9G**
		Other	**—**	**KR9▲H13**	**KR9▲**
	2-Position, Maintained Pull, Maintained Push, 1-5/8 in (40 mm) Screw-On Plastic Mushroom (with Set Screw) *(9)*	Red	**—**	**KR9R94H13**	**KR9R94**
9001KR9RM94	2-Position Maintained Pull, Maintained Push 1-5/8 in (40 mm) Screw-On Metal Mushroom (with Set Screw)	Black	**—**	**—**	**KR9BM94**
		Red	**—**		**KR9RM94**
		Green	**—**		**KR9GM94**
9001KR9RM95	2-Position Maintained Pull, Maintained Push 2-3/8 in (60 mm) Screw-On Metal Mushroom (with Set Screw)	Black	**—**	**—**	**KR9BM95**
		Red	**—**		**KR9RM95**
		Green	**—**		**KR9GM95**

Non-Illuminated Turn-To-Release Mushroom Operators

Description		Color	With 1 N.O. & 1 N.C. Contact (KA1)	With 2 N.O. & 2 N.C. Contacts (KA2)	Without Contacts
9001KR16H2 Trigger Action	2-Position Trigger-Action, Turn-to-Release 1-5/8 in. (40 mm) Non-Removal Plastic Mushroom *Complies with EN418/ISO13850 standards for Emergency Stop push buttons when used with circular Legend Plate 9001KN8330 (90 mm diameter) or 9001KN9330 (60 mm diameter). See page 26.*	Red	**KR16H13**	**KR16H2**	**KR16**

Illuminated Push-Pull Mushroom Operators

9001KR9P1
1-5/8 in Diameter Knob with "Pull To Start / Push To Stop" 9001KN379 Legend Plate

For 1-3/8 in or 2-1/4 in Diameter Knob (1)

Description *(1)*	Voltage	With Red Knob and 2 N.C. Contacts (1 KA3, 1 KA5) *(3)*	With Other Color Knob and 2 N.C. Contacts (1 KA3, 1 KA5) *(2) (3)*	With Other Color Knob Without Contacts *(2) (3) (6)*
3-Position Illuminated Momentary Pull Maintained Neutral Momentary Push *(8)*	110-120 V, 50-60 Hz	**KR8P1RH25**	**KR8P1▲H25**	**KR8P1▲**
	Other - Transformer, LED, Flashing *(4)*	**KR8P■RH25**	**KR8P■▲H25**	**KR8P■▲**
	Other - Full Voltage, Resistor, Neon *(5)*	**KR8P■RH25**	**KR8P■▲H25**	**KR8P■▲**

Description *(1)*	Voltage	With Red□ Knob and 1 N.O. & 1 N.C. Contact (KA1)	With Other Color Knob and 1 N.O. & 1 N.C. Contact (KA1)	With Other Color Knob Without Contacts
2-Position Illuminated Maintained Pull Maintained Push *(9)*	110–120 V, 50–60 Hz	**KR9P1RH13**	**KR9P1▲H13**	**KR9P1▲**
	Other - Transformer, LED, Flashing *(4)*	**KR9P■RH13**	**KR9P■▲H13**	**KR9P■▲**
	Other - Full Voltage, Resistor, Neon *(5)*	**KR9P■RH13**	**KR9P■▲H13**	**KR9P■▲**

(1) For 1-3/8 in or 2-1/4 in dia. knob:
a) Order Type -20 or -21 knob from page 28.
b) Order 9001K54 adapter (no charge)—allows Type -20 or -21 knob to fit on push pull operators. Voids UL and NEMA 6 rating.
c) Can order assembled operator by adding color code to Type -20 or -21. Example: 9001KR9R would be 9001KR9R20 or 9001KR9R21.
(2) Replace ▲ with the color code as chosen from the color code table below. Example: KR9▲ with a yellow knob = KR9Y
(3) Replace ■ with the voltage assembly code as chosen from the tables on page 24. Example: KR8P ■ with a 277 V 50–60 Hz voltage = KR8P8
(4) The knob must be the same color as the LED light module chosen, for example, for a green LED, use a green knob.
(5) On neon light modules, use clear knobs only.
(6) These operators can be ordered complete with contact blocks. For maximum block usage, see page 22. Add the "H" number chosen from page 22 to the end of the operator reference number.
(7) To obtain a red knob with "Push Emergency Stop" printed on the red knob, substitute "R05" in place of "R".
(8) See page 16 for contact sequences.
(9) See table below.

Other Color Code Selection

Color	KR6, KR7, KR67	KR11, KR12	KR8, KR9	Color	KR6, KR7, KR67	KR11, KR12	KR8, KR9
Black *(1)*	B	B	B	White	—	W	W
Red	R	R	R	Orange *(1)*	—	S	S
Green	G	G	G	Clear	—	—	C
Blue		L	L	Amber	—	—	A
Yellow	—	Y	Y	Gray	—	E	—

(1) These colors are not available on illuminated push-pull operators.

To select and order Contact Blocks, Light Modules, Knobs, and Accessories, see pages 20 to 29.

Contact Sequences

9001KR8RH1 or H13

		Pull	Ctr	Push
(KA1)	KA3	x	O	O
	KA2	O	O	x

9001KR8RH25

KA3	x	O	O
KA5	x	x	O
KA2	O	O	x

O = contact open; x = contact closed

Product range: page 5 | Specifications: page 7 | Dimensions: page 30 | Mounting: page 31

Schneider Electric

Harmony™ 9001K/SK/KX 30 mm push buttons

9001K – Selector switches

Note: When ordering, add prefix "9001" to the reference.

2-Position Selector Switches

Contact Block Required

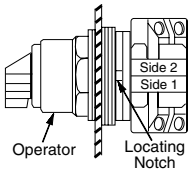

Top View

Contact Block Position	Quantity and Type KA1 or KA2 or KA3	Mount on Side KA1 or KA2 or KA3	1 — Contact Closed ↖ Left	1 — Contact Closed ↗ Right	0 — Contact Open ↖ Left	0 — Contact Open ↗ Right
	KA1 or KA3	KA1 #2 or KA3 #2	1	0	0	1
	KA2	KA2 #2	0	1	1	0
	KA1 or KA3	KA1 #1 or KA3 #1	1	0	0	1
	KA2	KA2 #1	0	1	1	0
Cam (see page 16)			**E**		**D**	

Non-Illuminated Operators

Manual Return *(1)*, Operator Only (without contact blocks)	**Reference**	**Reference**
Without Knob	**KS11**	**KS12**
With Knob (select style and color from table below)	**KS11**	**KS12**
Key Operated with E10 Key (Code1,2,3)	**KS11K**	**KS12K**
Operator with Contact Blocks and Standard black knob	**Reference**	**Reference**
With 1 KA1 on Side #2	**KS11BH13**	**—**
With 1 KA1 on Side #1	**KS11BH1**	**—**
With 1 KA1 on Side #1 and 1 KA1 on side #2	**KS11BH2**	**—**
Spring Return from Left *(1)*, Operator Only (without contact blocks)	**Reference**	**Reference**
Without Knob	**KS25**	**—**
With Knob (select style and color from table below)	**KS25**	**—**
Key Operated with E10 Key (Code 2 only) *(4)*	**KS25K2★**	**—**
Spring Return from Right *(1)*, Operator Only (without contact blocks)	**Reference**	**Reference**
Without Knob	**—**	**KS34**
With Knob (select style and color from table below)	**—**	**KS34**
Key Operated with E10 Key (Code 1 only)	**—**	**KS34K1**

Illuminated Operators

Manual Return *(1)*, Operator Only (without contact blocks)	**Reference**	**Reference**
Without Knob, 110-120V 50-60 Hz Transformer	**K11J1**	**K12J1**
With Standard Red Knob, 110-120V 50-60 Hz Transformer	**K11J1R**	**K12J1R**
With Other Color Knob and other voltage Light Module *(2) (3)*	**K11J■♦**	**K12J■♦**
Spring Return from Left *(1)*, Operator Only (without contact blocks)	**Reference**	**Reference**
Without Knob, 110-120V 50-60 Hz Transformer	**K25J1**	**—**
With Standard Red Knob, 110-120V 50-60 Hz Transformer	**K25J1R**	**—**
With Other Color Knob and other voltage Light Module *(2) (3)*	**K25J■♦**	**—**
Spring Return from Right *(1)*, Operator Only (without contact blocks)	**Reference**	**Reference**
Without Knob, 110-120V 50-60 Hz Transformer	**—**	**K34J1**
With Standard Red Knob, 110-120V 50-60 Hz Transformer	**—**	**K34J1R**
With Other Color Knob and other voltage Light Module *(2) (3)*	**—**	**K34J■♦**

(1) These operators can be ordered complete with contact blocks. Add the "H code" from page 21 as needed for your application.
(2) Replace ■ with the voltage assembly code as chosen from the tables on page 24. Example: K25J■ with 208 Vac = K25J3.
(3) Replace ♦ with the knob color code as chosen from the table below. For LED, knob color must match LED.
(4) Replace ★ with the key withdrawal code from the table below right.

Selector Switch Assembly Code and Knob Cat. No.

Color	Standard Knob ♦ Knob Code	Standard Knob Reference	Gloved Hand Knob ♦ Knob Code	Gloved Hand Knob Reference
Black	B	**B11**	FB	**B25**
Red	R	**R8**	FR	**R24**
Green	G	**G8**	FG	**G24**
Yellow	Y	**Y8**	FY	**Y24**
Blue	L	**L8**	FL	**L24**
White	W	**W8**	FW	**W24**
Amber	A	**A8**	FA	**A24**
Clear	C	**C8**	FC	**C24**

To select and order Contact Blocks, Light Modules, Knobs, and Accessories, see pages 20 to 29.

Key Withdrawal Codes

★ Code	Position
1	Left Only
2	Right Only
3	Left and Right

Harmony™ 9001K/SK/KX 30 mm push buttons

9001K – Selector switches

Note: When ordering, add prefix "9001" to the reference.

3-Position Selector Switches

Contact Block Required — **1 — Contact Closed 0 — Contact Open**

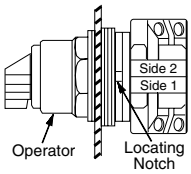

Top View

Contact Block Position	Quantity and Type	Mount on Side	Center Left Right	Center Left Right	Center Left Right	Center Left Right	Center Left Right	Center Left Right	Center Left Right	Center Left Right	Center Left Right
KA1 or KA3		KA1 or KA3 #2	1 0 0	1 0 0	0 0 1	1 0 0	1 0 0	1 0 0	1 0 0	0 1 0	1 1 0
KA2		KA2 #2	0 1 1	0 0 1	0 1 0	0 1 0	0 0 1	0 1 1	0 1 1	1 0 0	0 0 1
KA1 or KA3		KA1 or KA3 #1	0 0 1	1 0 0	0 0 1	1 0 0	0 1 0	0 0 1	1 0 1	0 0 1	0 1 1
KA2		KA2 #1	1 1 0	0 0 1	0 1 0	0 1 0	0 0 1	1 0 0	0 1 0	0 1 0	1 0 0
Cam (see page 16)			**B**	**C**	**D**	**E**	**F**	**G**	**J**	**L**	**M**

Non-Illuminated Operators

Manual Return, Operator Only (without contact blocks) *(1)*									
Without Knob	**KS42**	**KS43**	**KS44**	**KS45**	**KS46**	**KS47**	**KS49**	**KS401**	**KS402**
With Knob *(3)*	**KS42♦**	**KS43♦**	**KS44♦**	**KS45♦**	**KS46♦**	**KS47♦**	**KS49♦**	**KS401♦**	**KS402♦**
Key Operated with E10 Key (Code 4 through 10) *(5)*	**KS42K▼**	**KS43K▼**	**KS44K▼**	**KS45K▼**	**KS46K▼**	**KS47K▼**	**KS49K▼**	**KS401K▼**	**KS402K▼**
Operator with Contact Blocks and Standard black knob *(4)*									
With 1 KA1 on Side #2 (H13)	**KS42BH13**	**KS43BH13**	**KS44BH13**	**KS45BH13**	**KS46BH13**	**KS47BH13**	**KS49BH13**	**KS401BH13**	**KS402BH13**
With 1 KA1 on Side #1 (H1)	**KS42BH1**	**KS43BH1**	**KS44BH1**	**KS45BH1**	**KS46BH1**	**KS47BH1**	**KS49BH1**	**KS401BH1**	**KS402BH1**
With 1 KA1 on Side #1 and 1 KA1 on side #2 (H2)	**KS42BH2**	**KS43BH2**	**KS44BH2**	**KS45BH2**	**KS46BH2**	**KS47BH2**	**KS49BH2**	**KS401BH2**	**KS402BH2**
Spring Return from Left to Center, Operator Only (without contact blocks) *(1)*									
Without Knob	**KS62**	**KS63**	**KS64**	**KS65**	**KS66**	**KS67**	**KS69**	**KS601**	**KS602**
With Knob *(3)*	**KS62♦**	**KS63♦**	**KS64♦**	**KS65♦**	**KS66♦**	**KS67♦**	**KS69♦**	**KS601♦**	**KS602♦**
Key Operated with E10 Key (Code 5, 6 or 9 only) *(5)*	**KS62K▼**	**KS63K▼**	**KS64K▼**	**KS65K▼**	**KS66K▼**	**KS67K▼**	**KS69K▼**	**KS601K▼**	**KS602K▼**
Spring Return from Right to Center, Operator Only (without contact blocks) *(1)*									
Without Knob	**KS72**	**KS73**	**KS74**	**KS75**	**KS76**	**KS77**	**KS79**	**KS701**	**KS702**
With Knob *(3)*	**KS72♦**	**KS73♦**	**KS74♦**	**KS75♦**	**KS76♦**	**KS77♦**	**KS79♦**	**KS701♦**	**KS702♦**
Key Operated with E10 Key (Code 4, 5 or 7 only) *(5)*	**KS72K▼**	**KS73K▼**	**KS74K▼**	**KS75K▼**	**KS76K▼**	**KS77K▼**	**KS79K▼**	**KS701K▼**	**KS702K▼**
Spring Return from Both Sides to Center, Operator Only (without contact blocks) *(1)*									
Without Knob	**KS52**	**KS53**	**KS54**	**KS55**	**KS56**	**KS57**	**KS59**	**KS501**	**KS502**
With Knob *(3)*	**KS52♦**	**KS53♦**	**KS54♦**	**KS55♦**	**KS56♦**	**KS57♦**	**KS59♦**	**KS501♦**	**KS502♦**
Key Operated with E10 Key (Code 4, 5 or 7 only) *(5)*	**KS52K▼**	**KS53K▼**	**KS54K▼**	**KS55K▼**	**KS56K▼**	**KS57K▼**	**KS59K▼**	**KS501K▼**	**KS502K▼**

Illuminated Operators

Manual Return, Operator Only (without contact blocks) *(1)*									
Without Knob, 110-120V 50-60 Hz Transformer	**K42J1**	**K43J1**	**K44J1**	**K45J1**	**K46J1**	**K47J1**	**K49J1**	**K401J1**	**K402J1**
With Standard Red Knob, 110-120V 50-60 Hz Transformer	**K42J1R**	**K43J1R**	**K44J1R**	**K45J1R**	**K46J1R**	**K47J1R**	**K49J1R**	**K401J1R**	**K402J1R**
With Other Color Knob and other voltage Light Module *(2) (3)*	**K42J■♦**	**K42J■♦**	**K44J■♦**	**K45J■♦**	**K46J■♦**	**K47J■♦**	**K49J■♦**	**K401J■♦**	**K402J■♦**
Spring Return from Left to Center, Operator Only (without contact blocks) *(1)*									
Without Knob, 110-120V 50-60 Hz Transformer	**K62J1**	**K63J1**	**K64J1**	**K65J1**	**K66J1**	**K67J1**	**K69J1**	**K601J1**	**K602J1**
With Standard Red Knob, 110-120V 50-60 Hz Transformer	**K62J1R**	**K63J1R**	**K64J1R**	**K65J1R**	**K66J1R**	**K67J1R**	**K69J1R**	**K601J1R**	**K602J1R**
With Other Color Knob and other voltage Light Module *(2) (3)*	**K62J■♦**	**K62J■♦**	**K64J■♦**	**K65J■♦**	**K66J■♦**	**K67J■♦**	**K69J■♦**	**K601J■♦**	**K602J■♦**
Spring Return from Right to Center, Operator Only (without contact blocks) *(1)*									
Without Knob, 110-120V 50-60 Hz Transformer	**K72J1**	**K73J1**	**K74J1**	**K75J1**	**K76J1**	**K77J1**	**K79J1**	**K701J1**	**K702J1**
With Standard Red Knob, 110-120V 50-60 Hz Transformer	**K72J1R**	**K73J1R**	**K74J1R**	**K75J1R**	**K76J1R**	**K77J1R**	**K79J1R**	**K701J1R**	**K702J1R**
With Other Color Knob and other voltage Light Module *(2) (3)*	**K72J■♦**	**K72J■♦**	**K74J■♦**	**K75J■♦**	**K76J■♦**	**K77J■♦**	**K79J■♦**	**K701J■♦**	**K702J■♦**
Spring Return from Both Sides to Center, Operator Only (without contact blocks) *(1)*									
Without Knob, 110-120V 50-60 Hz Transformer	**K52J1**	**K53J1**	**K54J1**	**K55J1**	**K56J1**	**K57J1**	**K59J1**	**K501J1**	**K502J1**
With Standard Red Knob, 110-120V 50-60 Hz Transformer	**K52J1R**	**K53J1R**	**K54J1R**	**K55J1R**	**K56J1R**	**K57J1R**	**K59J1R**	**K501J1R**	**K502J1R**
With Other Color Knob and other voltage Light Module *(2) (3)*	**K52J■♦**	**K53J■♦**	**K54J■♦**	**K55J■♦**	**K56J■♦**	**K57J■♦**	**K59J■♦**	**K501J■♦**	**K502J■♦**

(1) These operators can be ordered complete with contact blocks. Add the "H code" from page 21 as needed for your application.
(2) Replace ■ with the voltage assembly code as chosen from the tables on page 24. Example: K25J■ with 208 Vac = K25J3.
(3) Replace ♦ with the knob color code as chosen from the table below. For LED, knob color must match LED.
*(4) For other color knobs replace the **B** with knob color code from table below.*
(5) Replace ▼ with the key withdrawal code from table below right. Example: KS43K▼ with key withdrawal in the right position only = KS43K6.

Selector Switch Assembly Code and Knob Cat. No.

Color	Standard Knob ♦ Knob Code	Reference	Gloved Hand Knob ♦ Knob Code	Reference
Black	B	**B11**	FB	**B25**
Red	R	**R8**	FR	**R24**
Green	G	**G8**	FG	**G24**
Yellow	Y	**Y8**	FY	**Y24**
Blue	L	**L8**	FL	**L24**
White	W	**W8**	FW	**W24**
Amber	A	**A8**	FA	**A24**
Clear	C	**C8**	FC	**C24**

Key Withdrawal Codes

▼ Code	Position
4	Left Only
5	Center Only
6	Right Only
7	Left and Center
8	Left and Right
9	Center and Right
10	Left, Center, and Right

To select and order Contact Blocks, Light Modules, Knobs, and Accessories, see pages 20 to 29.

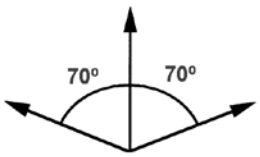

Harmony™ 9001K/SK/KX 30 mm push buttons

9001K – Selector switches

Note: When ordering, add prefix "9001" to the reference.

4-Position Selector Switches

Contact Block Required

Contact Block Position	Quantity and Type KA1 or KA2 or KA3			Mount on Side KA1 or KA2 or KA3			1 — Contact Closed 0 — Contact Open
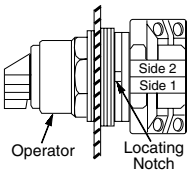	KA1	or	KA3	KA1 #2	or	KA3 #2	1 0 0 0
			KA2			KA2 #2	0 0 1 0
	KA1	or	KA3	KA1 #1	or	KA3 #1	0 0 0 1
			KA2			KA2 #1	0 1 0 0

Top View

Cam (see page 16)	H

Non-Illuminated Operators

Manual Return *(1)*, Operator Only (without contact blocks)	Reference
Without Knob	**KS88**
With Knob *(3)*	**KS88♦**
Key Operated with E10 Key (Codes 11, 12, 13, 14, 15) *(4)*	**KS88K★**

Illuminated Operators

Manual Return *(1)*, Operator Only (without contact blocks)	Reference
Without Knob, 110-120V 50-60 Hz Transformer	**KS88J1**
With Standard Red Knob, 110-120V 50-60 Hz Transformer	**KS88J1R**
With Other Color Knob and other voltage Light Module *(2) (3)*	**KS88J■♦**

(1) These operators can be ordered complete with contact blocks. Add the "H code" from page 21 as needed for your application.
(2) Replace ■ with the voltage assembly code as chosen from the tables on page 24. Example: K25Jb with 208Vac = K25J3.
(3) Replace ♦ with the knob color code as chosen from the table below. For LED, knob color must match LED.
(4) Replace ★ with the key withdrawal code from the table below right.

Selector Switch Assembly Code and Knob Cat. No.

Color	Standard Knob ♦ Knob Code	Standard Knob Reference	Gloved Hand Knob ♦ Knob Code	Gloved Hand Knob Reference
Black	B	**B11**	FB	**B25**
Red	R	**R8**	FR	**R24**
Green	G	**G8**	FG	**G24**
Yellow	Y	**Y8**	FY	**Y24**
Blue	L	**L8**	FL	**L24**
White	W	**W8**	FW	**W24**
Amber	A	**A8**	FA	**A24**
Clear	C	**C8**	FC	**C24**

Key Withdrawal Codes

★ Code	Position
11	**1 and 4**
12	**4 only**
13	**1 only**
14	**1, 2, 3 and 4**
15	**2, 3, and 4**

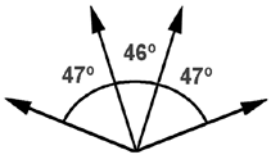

Potentiometers with Dial Plate (not UL listed)—Maximum Voltage 300 Vac

Power	Description	Ratings	Reference
2 W	Operator Only, for Single Potentiometer	NEMA 4, 13	**K20**
	Operator with Single Potentiometer		**K21**
	Operator Only, for Tandem Potentiometer		**K22**
	Operator with Tandem Potentiometer		**K23**

Potentiometer Suffixes

Single Potentiometer

Suffix *(5)*	Resistance	Suffix *(5)*	Resistance
01	50 Ω	07	5 kΩ
02	100 Ω	08	10 kΩ
04	500 Ω	09	25 kΩ
05	1 kΩ	13	500 kΩ
39	2 kΩ	37	750 kΩ
06	2.5 kΩ	14	1 MΩ

Tandem Potentiometer

Suffix *(5)*	Resistance Front	Resistance Rear
82	1 kΩ	1 kΩ

(5) For the complete reference, add the suffix from Suffix column to the reference from Reference column in "Potentiometer with Dial Plate" table above. Example: 9001 K21 05.
Any potentiometer with a shaft 7/8" long and 1/4" diameter may be used with these operators. To select and order Contact Blocks, Light Modules, Knobs, and Accessories, see pages 20 to 29.

Product range: page 5 | Specifications: page 7 | Dimensions: page 30 | Mounting: page 31

Harmony™ 9001K/SK/KX 30 mm push buttons

9001K – Selector switch guide

Note: When ordering, add prefix "9001" to the reference.

Shown below is a simplified method of selecting a selector switch to meet almost any combination of contact sequences.

Step No. 1

Determine the contact sequence(s) required. Set up a target table like the one shown for the example below.

Contact Sequence 0—contact open 1—contact closed	↖	↑	↗
A	1	0	0
B	0	1	0
C	0	0	1

Step No. 2

Look for a cam type common to all sequences in the three tables to the right. For t he example above, the "3-Position Selector Switch" table would be used. For the contact sequences A (1 0 0), B (0 1 0) and C (0 0 1) of the example above, cam types F and L are common to all three sequences.

Step No. 3

Next, use the cam type common to all the sequences (if several cam types are common, choose one) to find the operator reference number. Go to the proper page number as indicated in the table below:

Number of Positions	Push Button Line	Page Number
2	9001KS	13
3	9001KS	14
4	9001KS	15

If for the example above a manual return operator with a standard black knob is required and:

The F cam type is chosen, the operator reference number is:
- 9001K—Class 9001 Reference KS46B (from page 14)

The L cam type is chosen, the operator reference number is:
- 9001K—Class 9001 Reference KS401B (from page 14)

Step No. 4

Determine the contact blocks required by using the same table in Step No. 2.

If, for the example above, the F cam type is chosen:
- Use a 9001KA3 mounted on side no. 2 for sequence A (1 0 0).
- Use a 9001KA3 mounted on side no. 1 for sequence B (0 1 0).
- Use a 9001KA2 mounted on side no. 1 or 2 for sequence C (0 0 1).

If, for the example above, the L cam type is chosen:
- Use a 9001KA2 mounted on side no. 2 for sequence A (1 0 0).
- Use a 9001KA2 mounted on side no. 1 or a 9001KA3 mounted on side no. 2 for sequence B (0 1 0).
- Use a 9001KA3 mounted on side no. 1 for sequence C (0 0 1).

One 9001KA1 double circuit block can be used in place of one 9001KA2 single circuit block plus one 9001KA3 single circuit block mounted on the same side.

2-Position Selector Switch

If you require contact sequence— ↖	↗	Use Cam Type	Use Contact Block Reference	Mount on side no. (See page 21)
1	0	E	KA3	1 or 2
		D	KA2	1 or 2
0	1	E	KA2	1 or 2
		D	KA3	1 or 2

3-Position Selector Switch

If you require contact sequence— ↖	↑	↗	Use Cam Type									Use Contact Block Reference	Mount on side no. (See page 21)
1	0	0						G			M	KA2	1
										L		KA2	2
				C		E						KA3	1
			B	C		E	F	G	J			KA3	2
			B					G	J			KA5 *(1)*	2
0	1	0			D	E			J	L		KA2	1
					D	E						KA2	2
							F					KA3	1
										L		KA3	2
0	0	1		C			F					KA2	1 or 2
			B		D			G		L		KA3	1
					D							KA3	2
			B									KA5 *(1)*	1
											M	KA2	2
1	1	0	B									KA2	1
				C			F					KA5 *(1)*	1 or 2
											M	KA3	2
0	1	1	B					G	J			KA2	2
								G				KA5 *(1)*	1
										L		KA5 *(1)*	2
											M	KA3	1
1	0	1							J			KA3	1
					D	E			J	L		KA5 *(1)*	1
					D	E						KA5 *(1)*	2

4-Position Selector Switch

If you require contact sequence— ↖	↖	↗	↗	Use Cam Type	Use Contact Block Reference	Mount on side no. (See page 21)
1	0	0	0	H	(A) KA3	2
0	1	0	0	H	(B) KA2	1
0	0	1	0	H	(C) KA2	2
0	0	0	1	H	(D) KA3	1
1	0	0	1	H	A & D Wired in Parallel	
1	1	0	0	H	A & B Wired in Parallel	
0	1	1	0	H	B & C Wired in Parallel	
0	0	1	1	H	C & D Wired in Parallel	
1	1	1	0	H	A, B & C Wired in Parallel	
0	1	1	1	H	B, C & D Wired in Parallel	
1	0	1	0	H	A & C Wired in Parallel	
0	1	0	1	H	B & D Wired in Parallel	
1	1	0	1	H	KA5 *(1)*	2
1	0	1	1	H	KA5 *(1)*	1

(1) 9001KA5 must be the last block on either side.

When ordering, please specify:

- Quantity
- Class Number
- Type or Reference

For "H" Numbers, see page 22.

Harmony™ 9001K/SK/KX 30 mm push buttons

9001K – Pilot lights

Note: When ordering, add prefix "9001" to the reference.

Pilot Lights—UL Types 4, 13/NEMA 4 & 13
For use in hazardous locations, see page 23.
Legend plates not included.

Description	Voltage	Style	With Red Fresnel Color Cap *(1)*	With Green Fresnel Color Cap *(1)*	With Other Color Cap *(1) (2)*	Without Color Cap *(1)*
Standard Pilot Light (Plastic Fresnel Color Cap Shown)	110–120 V, 50–60 Hz 220–240 V, 50–60 Hz 24–28 Vac/Vdc	Transformer Transformer Full Voltage	**KP1R31** **KP7R31** **KP35R31**	**KP1G31** **KP7G31** **KP35G31**	**KP1■** **KP7■** **KP35■**	**KP1** **KP7** **KP35**
	For other voltages see page 24.	Transformer, Flashing or LED *(3)* Full Voltage, Neon or Resistor *(4)*	**KP▲R31** **KP▲R31**	**KP▲G31** **KP▲G31**	**KP▲■** **KP▲■**	**KP▲** **KP▲**
Push-To-Test Pilot Light (Glass Color Cap Shown)	110–120 V, 50–60 Hz 220–240 V, 50–60 Hz 24–28 Vac/Vdc	Transformer Transformer Full Voltage	**KT1R31** **KT7R31** **KT35R31**	**KT1G31** **KT7G31** **KT35G31**	**KT1■** **KT7■** **KT35■**	**KT1** **KT7** **KT35**
	For other voltages see page 24.	Transformer, Flashing or LED *(3)* Full Voltage, Neon or Resistor *(4)*	**KT▲R31** **KT▲R31**	**KT▲G31** **KT▲G31**	**KT▲■** **KT▲■**	**KT▲** **KT▲**
Remote Test Pilot Light (Glass Color Cap Shown)	120 Vac Only 24–28 Vac Only for other voltages	Resistor *(5)* Full Voltage *(5)*	**KTR38R31** **KTR35R31**	**KTR38G31** **KTR35G31**	**KTR38■** **KTR35■**	**KTR38** **KTR35**
	For other voltages see page 24.	Full Voltage or Resistor *(5)*	**KTR▲R31**	**KTR▲G31**	**KTR ▲■**	**KTR▲**

(1) Replace ▲ with the voltage assembly code as chosen from the tables on page 24. Example: KT▲R31 with 208 Vac red LED = KT37LRR31
(2) Replace ■ with the color code as chosen from the color code table below. Example: KP1■ with a blue fresnel cap = KP1L31
(3) The cap must be the same color as the LED light module chosen, e.g., for green LED, use green color cap.
(4) On neon light modules, use clear color caps only.
(5) On remote test pilot lights use only full voltage or resistor voltage assembly codes. Do not choose LED, neon or transformer codes. For AC use only.

Color Caps

Color	■ Plastic Fresnel	■ Plastic Domed	■ Glass
Amber	A31	A9	A6
Blue	L31	L9	L6
Clear	C31	C9	C6
Green	G31	G9	G6
Red	R31	R9	R6
White	W31	W9	W6
Yellow	Y31	Y9	Y6

Typical Wiring Diagrams

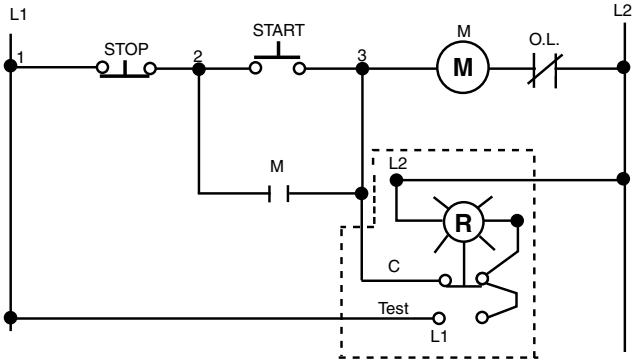

Push-to-test Pilot Light

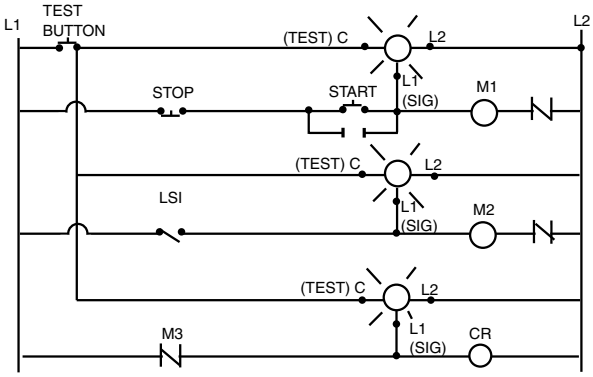

Remote Test Pilot Light

Product range: page 5
Specifications: page 7
Dimensions: page 30
Mounting: page 31

Harmony™ 9001K/SK/KX 30 mm push buttons

9001K – Specialty operators

Note: When ordering, add prefix "9001" to the reference.

Without Latch

With Latch

Joy Stick Operators—UL Types 4, 13/NEMA 4, 13. For use in hazardous locations, see page 23. Contact blocks and legend plate not included unless noted.

Description			Operator With Contacts	Operator Without Contacts *(1)*
3-Position—Center Off	Momentary Contact—Spring Return to Center	Without Latch	**K71H7**	**K71**
		With Latch	**K70H7**	**K70**
	Maintained Contact	Without Latch	**K73H7**	**K73**
		With Latch	**K72H7**	**K72**
3-Position—Center Off	Momentary Contact—Spring Return to Center	Without Latch	**K31H8**	**K31**
		With Latch	**K30H8**	**K30**
	Maintained Contact	Without Latch	**K33H8**	**K33**
		With Latch	**K32H8**	**K32**
5 Position—Center Off	Momentary Contact—Spring Return to Center	Without Latch	**K35H2**	**K35**
		With Latch	**K34H2**	**K34**
	Maintained Contact	Without Latch	**K37H2**	**K37**
		With Latch	**K36H2**	**K36**

(1) These operators can be ordered complete with contact blocks—a total of four (4) contact blocks can be used. Add the "H" number chosen from page 21 to the operator reference number and add the cost of the "H" number to the operator cost.

Contact Arrangements

Operator Positions		Contact Block Reference	Contact Block Location	Contact	Handle position (with reference to Nib) 1 ↑	2 →	OFF	3 ↓	4 ←
	3	**K3**	POS 1 (3)	A	—	1	0	—	0
		KA3	POS 2 (4)	A	—	0	0	—	1
	3	**KA2**	POS 1 (3)	B	1	—	0	0	—
		KA2	POS 2 (4)	B	0	—	0	1	—
	5	**KA1**	POS 1 (3)	A	0	1	0	0	0
				B	1	0	0	0	0
		KA1	POS 2 (4)	A	0	0	0	0	1
				B	0	0	0	1	0

(1) Contact Closed (0) Contact Open

The joy stick operator is ideal for applications where only one circuit is to be energized at one time. The three position joy stick closes one circuit in each Up-Down or Right-Left position with all circuits open in center position. The five position operator closes one circuit in each Up, Down, Left and Right position with all circuits open in center position.

Momentary contact operators are spring return to the center position. Maintained operators remain in position and must be returned manually. Operators with latch cannot be operated until the latch button in center of handle is pressed.

For use in hazardous locations, see page 23. Legend plate and contact block not included. Inserts are field convertible. For colors not listed, order operator without insert, plus separate color insert from page 28. Up to two 9001KA contact blocks can be mounted in tandem (total of four blocks). Selector push buttons cannot be illuminated.

Selector Push Button 9001KQ

Selector Push Button Operators—UL Types 4, 13/NEMA 4, 13

Contact Block Required *(4)*		Two Position Operators 0—Contact Open 1—Contact Closed F—Free D—Depressed									
Quantity and Type	Mount on Side	Left F D	Right F D	Left F D	Right F D	Left F D	Right F D	Left F D	Right F D	Left F D	Right F D
1 KA1	#2	0 0	1 0	0 0	1 0	0 0	1 1	1 1	1 0	1 0	0 0
		0 1	0 1	0 1	0 0	0 1	0 0	0 0	0 1	0 1	0 1
1 KA1	#1	0 0	1 1	0 0	1 0	1 1	0 0	1 0	1 1	1 1	0 0
		0 1	0 0	0 1	0 0	0 0	0 1	0 1	0 0	0 0	0 1
Cam *(3)*		**P**		**R**		**S**		**T**		**Y**	
Color Insert		**Reference**		**Reference**		**Reference**		**Reference**		**Reference**	
Without Insert *(2)* Black		**KQ11**		**KQ12**		**KQ13**		**KQ14**		**KQ15**	
		KQ11B		**KQ12B**		**KQ13B**		**KQ14B**		**KQ15B**	

(2) Order color inserts from page 28.
(3) Cams are not interchangeable.
(4) To order Contact Blocks, see pages 20 to 23.

For use in hazardous locations, see page 23. Key operated push buttons are used wherever unauthorized use of a push button is discouraged. Examples are locking a Start push button in the extended position or locking a Stop push button in the depressed position. The operator can also be locked in the flush position—holding all contacts open. Up to two 9001KA contact blocks can be mounted in tandem (total of four blocks). Legend Plate and Contact Block Not Included ("x" = locked position).

Key Operated Push Button 9001KR

Key Operated Push Button – UL Types 4, 13/NEMA 4, 13

Description	Lockable Positions Extended	Flush	Depressed	Reference
Push button operable only with key in lock. Key is removable in locked position only.	x	—	—	**KR131**
	—	x	—	**KR132**
	—	—	x	**KR133**
	x	x	x	**KR137**
Push button operable with or without key in lock. Push button can be locked with key only. Key removable in both locked or unlocked position.	x	—	—	**KR141**
	—	x	—	**KR142**
	—	—	x	**KR143**
	x	x	x	**KR147**
To lock the unit, rotate the key with the button in the extended position. Then, push the button to lock it in the position indicated at right. Key is removable only in this position.	—	x	—	**KR152**
	—	—	x	**KR153**

Note: All key operated push buttons are furnished as standard with Square D no. E10 key change. See catalog 9001CT0001 for other key changes.

Harmony™ 9001K/SK/KX 30 mm push buttons

9001K – Specialty operators

Note: When ordering, add prefix "9001" to the reference.

9001KR7U

9001KR11U

Illuminated and Non-Illuminated Dual Operators
Meets UL Type 13/NEMA 13 and UL Type 6/NEMA 6, which UL and NEMA consider an equivalent to UL Type 4/NEMA 4. For use in hazardous locations, see page 23. Legend plate and contact blocks not included unless otherwise noted.

Description	Color	With 2 N.O. Contacts (2 KA2)	With 1 N.O. & 1 N.C. Contact (KA2, KA3)	Without Contacts
Momentary Dual Function	Universal *(1)* Green-Red Other *(2)*	**KR6UH7** **KR6GRH7** **KR6■H7**	**KR6UH37** **KR6GRH37** **KR6■H37**	**KR6U** **KR6GR** **KR6■**
Momentary Interlocked Dual Function	Universal *(1)* Green-Red Other *(2)*	**KR67UH7** **KR67GRH7** **KR67■H7**	**KR67UH37** **KR67GRH37** **KR67■H37**	**KR67U** **KR67GR** **KR67■**
Maintained Interlocked Dual Function	Universal *(1)* Green-Red Other *(2)*	**KR7UH7** **KR7GRH7** **KR7■H7**	**KR7UH37** **KR7GRH37** **KR7■H37**	**KR7U** **KR7GR** **KR7■**
Description	**Color**		**Contacts (KA1)**	**Without Contacts**
Both Buttons Maintained Interlocked Assembly	Universal *(3)* Other *(4)*	—	**KR11UH1** **KR11★H1**	**KR11U** **KR11★**
One Button Momentary One Button Maintained Interlocked Assembly	Universal *(3)* Other *(4)*	—	**KR12UH1H1** **KR12★H1H1**	**KR12U** **KR12★**

(1) Universal for KR6, KR67, KR7 includes 2 inserts each of black, red and green.
(2) Replace ■ with one color for each button. R = red, G = green, B = Black. Example: A KR6 with left button red and right button black = KR6RB
(3) Universal for KR11, KR12 includes 2 each of black, red, green, yellow, orange, blue, white.
(4) Replace ★ with one color for each button. B = black, R = red, G = green, L = blue, Y = yellow, W = white, S = orange, E = gray. Example: A KR11 with top button gray and bottom button orange = KR11ES

Emergency Break-Glass Operator 9001K15

Emergency Break-Glass Operator— UL 4, 13/NEMA 4, 13

Reference
K15

Operator is held in a depressed position by a glass disc. When the glass disc is broken with the hammer, button returns to a normal extended position. Package of 5 discs included with operator.

9001K15 Replacement Parts

Description	Reference
Yellow bumper	**3105211101**
Hammer and chain	**3105206750**
Lower ring nut	**6512232801**
Top ring nut	**9001K40**
Package of 5 replacement discs	**9001K57**
Clip to hold hammer	**2540902240**

Rocker Arm Operating Lever 9001K50

Rocker Arm Operating Lever

Reference
K50

Allows two standard push buttons to be operated independently of each other. Order push buttons and legend plates from pages 10, 11, 25, and 26 (please specify which marking is to be inverted).

Wobble stick
For easy operation of any standard push button.

Reference
K8

Alternate Action—Push-on, Push-off Module

Reference
K85

Push-on Push-off Module 9001K85

This module can be added to standard 9001K, 9001KX, 9001SK or 9001T momentary push button operators. Contact blocks mounted behind this module (maximum of 2) are held in the depressed position when the operator is pressed once, and released to their normal position when the operator is pressed again. For a N.C. circuit, use a 9001KA3 or the N.C. contact of either a 9001KA1 or 9001KA4. For a N.O. circuit, use the N.O. contact of either a 9001KA4 or 9001KA6.

Time Delay Push Button 9001KRD

Time Delay Push Button—UL Types 4, 13/NEMA 4, 13

Description (Off - Delay)	Reference (All Colors) Full Guard	Extended Guard	No Guard
Timed Contact 1 N.O. and 1 N.C.	**KRD1UH1**	**KRD2UH1**	**KRD3UH1**
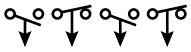 **Timed Contact 2 N.O. and 2 N.C.**	**KRD1UH2**	**KRD2UH2**	**KRD3UH2**

Timing period is adjustable from 0.1 second to 60 seconds and begins after button has been released. Devices include a pack of seven color inserts for color coding the push button. See page 28 for Universal color insert. Contacts are quick make-quick break. Note: When mounted in top or bottom hole of a 9001K enclosure, device requires one additional space below or above operator. When mounted other than in top or bottom hole, device may require two additional spaces, one above and one below operator. Closing plates must be installed on unused holes.

Product range: page 5 | Specifications: page 7 | Dimensions: page 30 | Mounting: page 31

Harmony™ 9001K/SK/KX 30 mm push buttons

9001K – Contact blocks

Note: When ordering, add prefix "9001" to the reference.

The 9001KA contact blocks are Fingersafe™ contact blocks (meeting VDE 0106 Part 100). They have one screw mounting and captive (backed out) plus/minus terminal screws. These contact blocks are double-break, direct-acting contacts. Because of the wiping action of these contacts, they are suitable for use with programmable controllers. All contact blocks listed below accept up to 2 #12–#24 AWG solid or stranded wires. Recommended tightening torque for screw terminals is 7 lb-in

Standard Contact Blocks

Description	Symbol	Reference
(Clear Cover)	Direct-Acting	KA1
(Green Cover)		KA2
(Red Cover)	Direct-Acting	KA3
(Clear Cover)	N.O. Contact Early Closing	KA4
(Red Cover)	N.C. Contact Late Opening	KA5
(Green Cover)	N.O. Contact Early Closing	KA6

Additional Circuit Arrangements

Sequencing *(1)* N.O. Contact of KA4 closes before N.O. Contact on KA1	KA4 KA1	Order One9001KA4 and One 9001KA1
Overlapping *(1)* N.O. Contact of KA4 closes before N.C. Contact of KA5 Opens	KA5	Order One9001KA4 and One 9001KA5

(1) For push buttons or two-position selector switches only. For sequencing or overlapping contacts on other operators, refer to catalog 9001CT0001.

Symbol	Contact Blocks with Binder Head Screws (not Fingersafe) Reference	Quantity *(2)*	Gold Flashed Contacts with Standard Pressure Wire Terminals Reference
	KA21	25–Up	KA31
	KA22	25–Up	KA32
	KA23	25–Up	KA33
N.O. Early Closing	KA24	25–Up	KA34
N.C. Contact Late Opening	KA25	25–Up	KA35

(2) Minimum order quantity is 25.

Contact blocks listed below are not Fingersafe, but provide:

- Terminals that accept ring tongue/fork tongue connectors
- Short single circuit contact blocks (0.75" deep vs. 0.97" deep on the Fingersafe)
- For assembled operators, use form Y238 (add to reference as suffix, for example: 9001KRU1H13Y238)

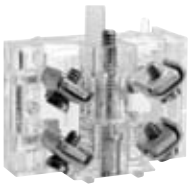

Contact blocks (not Fingersafe)

Symbol	Reference	Symbol	Reference
	KA1G	N.O. Contact Early Closing	KA4G
	KA2G	N.C. Contact Late Opening	KA5G
	KA3G	N.O. Contact Early Closing	KA6G

Contact blocks with Quick-Connect terminals (not Fingersafe)

Symbol	Reference
	KA12
	KA13

For dimensions, refer to catalog 9001CT0001

Maximum Current Ratings for Control Circuit Contacts—9001KA1–KA6, KA21–KA25, KA31–KA35, KA1G–KA6G

V	AC						V	DC				
	Inductive (NEMA / UL Type A600) 35% Power Factor					Resistive 75% Power Factor Make, Break and Continuous Amperes		Inductive and Resistive (NEMA Q600)				
	Make		Break		Continuous Carrying Amperes			Make and Break				Continuous Carrying Amperes
	Amperes	VA	Amperes	VA				KA1	KA2 KA3	KA4	KA5 KA6	
120	60	7200	6.0	720	10	10	125	0.55	0.55	—	—	2.5
240	30		3.0				250	0.27	0.27	—	—	
480	15		1.5				600	0.10	0.10	—	—	
600	12		1.2									

To select and order Contact Blocks, Light Modules, Knobs, and Accessories, see pages 50 to 59.

Harmony™ 9001K/SK/KX 30 mm push buttons

9001K – Contact blocks

Note: When ordering, add prefix "9001" to the reference.

Contact Block "H" Codes

The design of the 9001KA contact blocks allows them to be mounted side by side and/or in tandem. This enables you to specify an operator and a particular arrangement of contact blocks (shipped completely assembled) with a single reference number. See page 20 for a description of contact blocks.

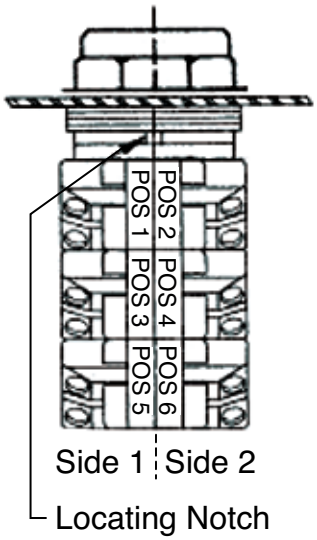

Example: *A 9001KR1B push button with 2 9001KA1 contact blocks would be 9001KR1BH2.*

Suffix No. (Add to Operator Reference)	Positions 1	2	3	4	5	6
H1	KA1					
H2	KA1	KA1				
H3	KA1	KA1	KA1			
H4	KA1	KA1	KA1	KA1		
H5	KA2					
H6	KA3					
H7	KA2	KA2				
H8	KA3	KA3				
H9	KA4	KA1				
H10	KA4	KA5				
H11	KA1	KA1		KA1		
H12	KA2	KA3	KA2	KA3		
H13		KA1				
H14		KA3				
H15	KA2	KA3	KA2			
H16	KA2	KA3		KA3		
H17	KA1	KA1	KA2			
H18	KA3	KA1	KA3		KA3	
H19	KA1	KA1	KA1	KA1	KA1	
H21	KA2	KA3				
H23	KA1	KA1	KA1	KA1	KA1	KA1
H24	KA1	KA2				
H25	KA5	KA3				

Note: For "H" Codes not shown in this table, contact your local Schneider Electric representative.

Dimensions When Using Contact Blocks

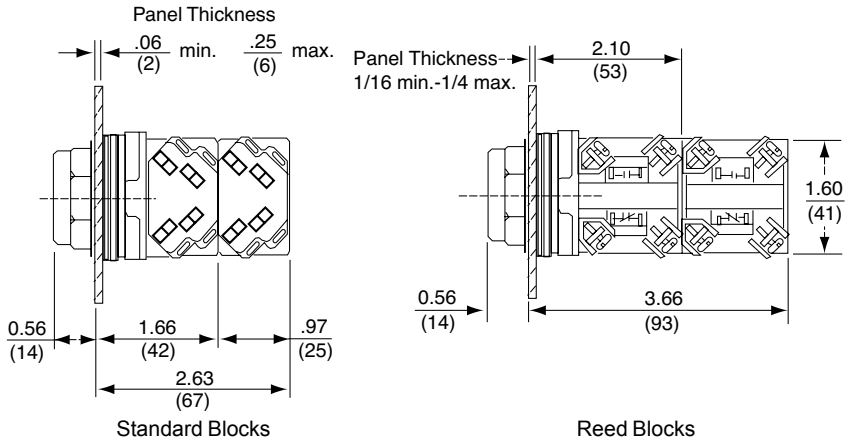

Maximum Contact Block Usage:

2 blocks mounted side by side only: Any 2, 3 or 4-Position spring return selector switch (non-illuminated, illuminated or keyed).

2 blocks mounted in tandem on one side only: Any 2 operator interlocked push button.

2 blocks mounted in tandem (total of four blocks): Any selector push button, keyed push button, 2, 3, or 4-Position maintained selector switch (non-illuminated, illuminated or keyed), push pull operators (non-illuminated or illuminated), joy stick, dual push button.

3 blocks mounted in tandem (total of six blocks): Single momentary push buttons (non-illuminated or illuminated).

Harmony™ 9001K/SK/KX 30 mm push buttons

9001K – Contact blocks

Note: When ordering, add prefix "9001" to the reference.

Mounting Hole for All 9001K, -SK, and -KX Control Units

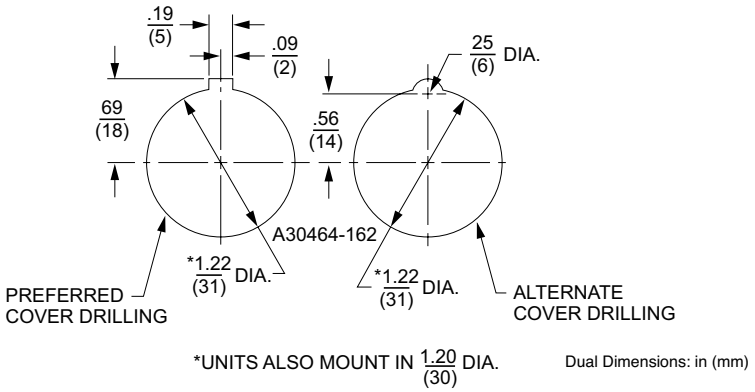

Hole Punch: *Use Greenlee Tool #60242 to punch mounting hole and notch.*

Maximum Contact Block Usage:

- **2 blocks mounted side by side only:** Any 2, 3 or 4-Position **spring return** selector switch (non-illuminated, illuminated or keyed).
- **2 blocks mounted in tandem on one side only:** Any 2 operator interlocked push button.
- **2 blocks mounted in tandem (total of four blocks):** Any selector push button, keyed push button, 2, 3, or 4-Position **maintained** selector switch (non-illuminated, illuminated or keyed), push-pull operators (non-illuminated or illuminated), joy stick, dual push button.
- **3 blocks mounted in tandem (total of six blocks):** Single momentary push buttons (non-illuminated or illuminated).

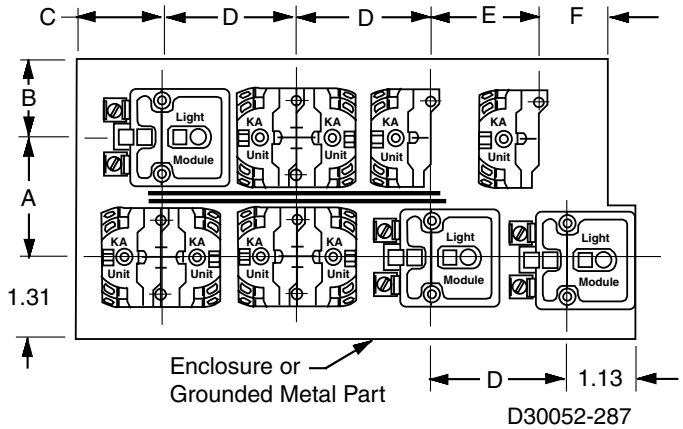

Min. Centerline Spacing, 9001K Control Units

Legend Plate	Operator	Centerline Spacing (in) A	B	C	D	E	F
Legend Plate Orientation Position #1							
KN2 KN5	Standard Push Button	1.75	1.31	1.44	2.25	1.69	0.88
	1.375 in Dia. Mushroom	1.75	1.31	1.44	2.25	1.69	0.88
	2.25 in Dia. Mushroom	2.25	1.31	1.44	2.25	2.25	1.12
	Selector Switch Knobs	1.75	1.31	1.44	2.25	1.69	0.88
KN3	Standard Push Button	2.00	1.31	1.44	2.25	1.75	0.88
	1.375 in Dia. Mushroom	2.00	1.31	1.44	2.25	1.75	0.88
	2.25 in Dia. Mushroom	2.25	1.31	1.44	2.25	2.25	1.12
	Selector Switch Knobs	2.00	1.31	1.44	2.25	1.75	0.88
KN4	Standard Push Button	1.94	1.31	1.44	2.25	1.62	0.88
	1.375 in Dia. Mushroom	1.94	1.31	1.44	2.25	1.62	0.88
	2.25 in Dia. Mushroom	2.25	1.31	1.44	2.25	2.25	1.12
	Selector Switch Knobs	1.74	1.31	1.44	2.25	1.62	0.88
KN6	Standard Push Button	2.38	1.62	1.44	2.25	2.25	1.12
	1.375 in Dia. Mushroom	2.38	1.62	1.44	2.25	2.25	1.12
	2.25 in Dia. Mushroom	2.38	1.62	1.44	2.25	2.25	1.12
	Selector Switch Knobs	2.38	1.62	1.44	2.25	2.25	1.12

Legend Plate	Operator	Centerline Spacing (in) A	B	C	D	E	F
Legend Plate Orientation Position #2							
KN2 KN5	Standard Push Button	1.62	1.31	1.44	2.25	1.75	0.88
	1.375 in Dia. Mushroom	1.62	1.31	1.44	2.25	1.75	0.88
	2.25 in Dia. Mushroom	2.25	1.31	1.44	2.25	2.25	1.12
	Selector Switch Knobs	1.62	1.31	1.44	2.25	1.75	0.88
KN3	Standard Push Button	1.75	1.31	1.44	2.25	2.00	0.88
	1.375 in Dia. Mushroom	1.75	1.31	1.44	2.25	2.00	0.88
	2.25 in Dia. Mushroom	2.25	1.31	1.44	2.25	2.25	1.12
	Selector Switch Knobs	1.75	1.31	1.44	2.25	2.00	0.88
KN4	Standard Push Button	1.62	1.31	1.44	2.25	1.94	1.00
	1.375 in Dia. Mushroom	1.62	1.31	1.44	2.25	1.94	1.00
	2.25 in Dia. Mushroom	2.25	1.31	1.44	2.25	2.25	1.12
	Selector Switch Knobs	1.62	1.31	1.44	2.25	1.94	1.00
KN6	Standard Push Button	2.25	1.31	1.62	2.38	2.38	0.88
	1.375 in Dia. Mushroom	2.25	1.31	1.62	2.38	2.38	0.88
	2.25 in Dia. Mushroom	2.25	1.31	1.62	2.38	2.38	1.12
	Selector Switch Knobs	2.25	1.31	1.62	2.38	2.38	0.88

Harmony™ 9001K/SK/KX 30 mm push buttons

9001K – Contact blocks

Note: When ordering, add prefix "9001" to the reference.

Hazardous locations do not always require the use of explosion-proof equipment like the 9001BR control stations. Selecting the most appropriate device for the location can save you money. For more information on the types of hazardous locations, contact your local electrical inspector.

Schneider Electric Offering According to Class, Division, and Group

For Class	Division	Group(s)	Use
I	1	A	1. Intrinsically Safe System
I	1	B, C, D	1. 9001BR station
			2. Intrinsically Safe System
I	2	A	1. 9001K control stations with restrictions *(1)*
			2. Intrinsically Safe System
I	2	B, C, D	1. 9001BR station
			2. 9001K control stations with restrictions *(1)*
			3. Intrinsically Safe System
II	1	E, F, G	1. 9001BR station
			2. Intrinsically Safe System
II	2	E, F	1. 9001BR station
			2. 9001K control stations with restrictions *(1)*
			3. Intrinsically Safe System
II	2	G	1. 9001BR station
			2. 9001K control stations with restrictions *(2)*
			3. Intrinsically Safe System
III	1, 2	—	1. 9001BR Station
			2. 9001K control stations with restrictions *(2)*
			3. Intrinsically Safe System

Any 9001K operator can be used in an area classified as Class I, Division 2 hazardous locations, if:
- *Only logic (KA40 series) or power (KA50 series) reed contact blocks are used.*
- *All 9001K illuminated operators are UL approved for use in Class I Division 2 areas.*
- *The operators are mounted in any NEMA 4 & 13 enclosures.*

(1) Any 9001K operator mounted in a 9001KY, 9001KYSS, 9001KYAF or 9001SKY enclosure may be used, except potentiometer operators.
(2) Add Form Y243 to single lamp Push-To-Test pilot lights.

Note: For (1) and (2): UL Listed: File E10054(N), CCN NOIV.

Hazardous Locations:

File E10054(N) CCN NOIV — File LR26817 Class 3218 02

Hermetically Sealed Logic Reed Contact Blocks Suitable for use on low energy level circuits

Description	Symbol	Reference
		KA41
		KA42
		KA43
		KA44
		KA45

Max. Vac/Vdc	Maximum Load Resistive	Inductive	Continuous
32/30	.25 A	.10 A	.5 A
120/100	8 VA	3 VA	.5 A

The maximum number of logic and/or power reed contact blocks per operator is as indicated on individual selection tables for standard contact blocks, **except**:
- On 3-Position selector switches with cams C, D, E, F, G, L, or M, mount reed blocks on **one side only** (either side), maximum 2 in tandem.
- On 4-Position selector switches, mount reed blocks on **one side only** (either side), maximum 2 in tandem.
- On joysticks or on 9001KR8 push-pull operators, mount reed blocks on **one side only** (either side), maximum 2 in tandem.

Hermetically Sealed Power Reed Contact Blocks *(5)*

Description	Symbol	Reference
		KA51
		KA52
		KA53
		KA54
		KA55

Volts	AC NEMA C300 *(3)* Make A	Make VA	Break A	Break VA	Continuous Carrying Amperes
120	10.00	1200	1.000	120	3.0
240	5.00		.500		

Volts	DC NEMA Q150 *(4)* Make A	Make VA	Break A	Break VA	Continuous Carrying Amperes
115	.50	58	.50	58	3.0

Note: All contact blocks listed above accept #12–18 solid or stranded wire.
The power reed contact blocks can be used with standard industrial relays and starters through NEMA Size 4. Minimum voltage is 5 V and the minimum current is 1 mA.

(3) Inductive Rating—35% Power Factor.
(4) Inductive and Resistive Ratings
(5) Not for use in pendant stations.

Harmony™ 9001K/SK/KX 30 mm push buttons

9001K – Light modules

Note: When ordering, add prefix "9001" to the reference.

Standard Light Modules for 9001K Control Units *(1)*

Voltage	Description	Light Module Reference	Voltage Assembly Code	Rating	Replacement Lamp Reference
All	Full Voltage (without Bayonet Base Lamp)	**KM40**	40	—	**no lamp included**
6 Vac/Vdc	Full Voltage	**KM31**	31	.9 VA	**2550101020**
6 Vac/Vdc	LED Red	**KM31LR**	31LR		**6508805201**
6 Vac/Vdc	LED Green	**KM31LG**	31LG		**6508805203**
6 Vac/Vdc	LED Yellow	**KM31LY**	31LY		**6508805202**
12–14 Vac/Vdc	Full Voltage	**KM32**	32	1.2 VA	**2550101037**
12–14 Vac/Vdc	LED Red	**KM32LR**	32LR		**6508805201**
12–14 Vac/Vdc	LED Green	**KM32LG**	32LG		**6508805203**
12–14 Vac/Vdc	LED Yellow	**KM32LY**	32LY		**6508805202**
18 Vac/Vdc	Resistor	**KM33**	33	1.4 VA	**2550101037**
24–28 Vac/Vdc	Full Voltage	**KM35**	35	1.2 VA	**2550101002**
24–28 Vac/Vdc	LED Red	**KM35LR**	35LR	.28 VA	**6508805210**
24–28 Vac/Vdc	LED Green	**KM35LG**	35LG	.28 VA	**6508805212**
24–28 Vac/Vdc	LED Yellow	**KM35LY**	35LY	.28 VA	**6508805211**
24–28 Vac/Vdc	LED White	**KM35LW**	35LW	.28 VA	**6508805214**
24–28 Vac/Vdc	LED Blue	**KM35LL**	35LL	.28 VA	**6508805213**
48 Vac/Vdc	Full Voltage	**KM36**	36	2.6 VA	**2550101025**
110–120 V, 50–60 Hz	LED Red	**KM1LR**	1LR		**6508805201**
110–120 V, 50–60 Hz	LED Green	**KM1LG**	1LG		**6508805203**
110–120 V, 50–60 Hz	LED Yellow	**KM1LY**	1LY		**6508805202**
110–120 V, 50–60 Hz	Transformer	**KM1**	1	2.4 VA	**2550101020**
110–120 V, 50–60 Hz	Flashing	**KMF1**	F1	.85 VA	**2550101036**
120 Vac/Vdc	Resistor	**KM38**	38	3.0 VA	**2550101027**
120 Vac/Vdc	Full Voltage	**KM38**	38	3.0 VA	**2550101027**
120 Vac/Vdc	Neon	**KM11**	11	0.2 VA	**2550101013**
120 Vac/Vdc	LED Red	**KM38LR**	38LR	1.4 VA	**6508805210**
120 Vac/Vdc	LED Green	**KM38LG**	38LG	1.4 VA	**6508805212**
120 Vac/Vdc	LED Yellow	**KM38LY**	38LY	1.4 VA	**6508805211**
120 Vac/Vdc	LED White	**KM38LW**	38LW	1.4 VA	**6508805214**
120 Vac/Vdc	LED Blue	**KM38LL**	38LL	1.4 VA	**6508805213**
208–220 V, 50–60 Hz	Transformer	**KM3**	3	2.5 VA	**2550101020**
208–220 V, 50–60 Hz	LED Red	**KM3LR**	3LR		**6508805201**
208–220 V, 50–60 Hz	LED Green	**KM3LG**	3LG		**6508805203**
208–220 V, 50–60 Hz	LED Yellow	**KM3LY**	3LY		**6508805202**
208–220 V, 50–60 Hz	LED White	**KM3LW**	3LW		**6508805215**
208–220 V, 50–60 Hz	LED Blue	**KM3LL**	3LL		**6508805216**
220–240 V, 50–60 Hz	Transformer	**KM7**	7	2.0 VA	**2550101020**
220–240 V, 50–60 Hz	LED Red	**KM7LR**	7LR		**6508805201**
220–240 V, 50–60 Hz	LED Green	**KM7LG**	7LG		**6508805203**
220–240 V, 50–60 Hz	LED Yellow	**KM7LY**	7LY		**6508805202**
220–240 V, 50–60 Hz	LED White	**KM7LW**	7LW		**6508805215**
220–240 V, 50–60 Hz	LED Blue	**KM7LL**	7LL		**6508805216**
240 Vac/Vdc	Resistor	**KM25**	25	6.0 VA	**2550101027**
240 Vac/Vdc	Neon	**KM12**	12	0.3 VA	**2550101013**
277 V, 50–60 Hz	Transformer	**KM8**	8	2.4 VA	**2550101020**
380–480 V, 50–60 Hz	Transformer	**KM5**	5	2.8 VA	**2550101020**
480 Vac/Vdc	Neon	**KM14**	14	0.5 VA	**2550101013**
550–600 V, 50–60 Hz	Transformer	**KM6**	6	2.5 VA	**2550101020**

(1) For use with all operators except KX and remote test pilot.

Notes: Light modules are available in other voltages, as shown above. For use in hazardous locations, see page 23. With neon type light modules, use a clear color cap only. With LED light modules, use either a clear color cap or a cap the same color as the LED.

Shallow Depth Light Modules for 9001K Control Units *(2)*

Voltage	Description	Light Module Reference	Voltage Assembly Code	Rating	Replacement Lamp Reference
24–28 Vac/Vdc	Full Voltage	**KM55**	55	1.2 VA	**2550101002**
	LED Red	**KM55LR**	55LR	0.5 VA	**6508805204**
	LED Green	**KM55LG**	55LG		**6508805206**
	LED Yellow	**KM55LY**	55LY		**6508805205**
110–120 Vac/Vdc	Full Voltage	**KM58**	58	3.0 VA	**2550101027**
	LED Red	**KM58LR**	58LR	0.5 VA	**6508805204**
	LED Green	**KM58LG**	58LG		**6508805206**
	LED Yellow	**KM58LY**	58LY		**6508805205**

(2) For use with all operators except KX and remote test pilot.

Notes: For use in hazardous locations, see page 23. Reduces the depth of illuminated push buttons with contact blocks by over 33%. With LED light modules, use a cap that is the same color as the LED.

File CCN E42259 NKCR — File Class LR25490 3211 03 — marked

Product range: page 5 | Specifications: page 7 | Dimensions: page 30 | Mounting: page 31

Harmony™ 9001K/SK/KX 30 mm push buttons

9001K – Legend plates

Note: When ordering, add prefix "9001" to the reference.

Legend Plates

Standard Markings	Plastic Legend Plates for use with 9001K Operators									Aluminum Legend Plates for use with 9001K Operators		
	1-3/4" Square			2-1/4" Square			2-1/2" Square			Black Legend	Black Legend	Blue Legend
	Silver Legend w/ Black Letters	White Legend w/ Black Letters	Black Legend w/ White Letters	Silver Legend w/ Black Letters	White Legend w/ Black Letters	Black Legend w/ White Letters	Silver Legend w/ Black Letters	White Legend w/ Black Letters	Black Legend w/ White Letters			
For Push Button or Pilot Light												
Blank	KN200SP	KN200WP	KN200BP	KN100SP	KN100WP	KN100BP	KN700SP	KN700WP	KN700BP	KN200	KN300	KN800
Blank (red)	KN200RP *(2)*	KN200RP *(2)*	KN200RP *(2)*	KN100RP *(2)*	KN100RP *(2)*	KN100RP *(2)*	KN700RP *(2)*	KN700RP *(2)*	KN700RP *(2)*	KN200R *(1)*	KN300R *(1)*	KN800R *(1)*
Start	KN201SP	KN201WP	KN201BP	KN101SP	KN101WP	KN101BP	KN701SP	KN701WP	KN701BP	KN201	KN301	KN801
Stop	KN202RP *(2)*	KN202RP *(2)*	KN202RP *(2)*	KN102RP *(2)*	KN102RP *(2)*	KN102RP *(2)*	KN702RP *(2)*	KN702RP *(2)*	KN702RP *(2)*	KN202 *(1)*	KN302 *(1)*	KN802 *(1)*
On	KN203SP	KN203WP	KN203BP	KN103SP	KN103WP	KN103BP	KN703SP	KN703WP	KN703BP	KN203	KN303	KN803
Off	KN204RP *(2)*	KN204RP *(2)*	KN204RP *(2)*	KN104RP *(2)*	KN104RP *(2)*	KN104RP *(2)*	KN704RP *(2)*	KN704RP *(2)*	KN704RP *(2)*	KN204 *(1)*	KN304 *(1)*	KN804 *(1)*
Emerg. Stop	KN205RP *(2)*	KN205RP *(2)*	KN205RP *(2)*	KN105RP *(2)*	KN105RP *(2)*	KN105RP *(2)*	KN705RP *(2)*	KN705RP *(2)*	KN705RP *(2)*	KN205 *(1)*	KN305 *(1)*	KN805 *(1)*
Forward	KN206SP	KN206WP	KN206BP	KN106SP	KN106WP	KN106BP	KN706SP	KN706WP	KN706BP	KN206	KN306	KN806
Reverse	KN207SP	KN207WP	KN207BP	KN107SP	KN107WP	KN107BP	KN707SP	KN707WP	KN707BP	KN207	KN307	KN807
Close	KN208SP	KN208WP	KN208BP	KN108SP	KN108WP	KN108BP	KN708SP	KN708WP	KN708BP	KN208	KN308	KN808
Open	KN209SP	KN209WP	KN209BP	KN109SP	KN109WP	KN109BP	KN709SP	KN709WP	KN709BP	KN209	KN309	KN809
Down	KN210SP	KN210WP	KN210BP	KN110SP	KN110WP	KN110BP	KN710SP	KN710WP	KN710BP	KN210	KN310	KN810
Up	KN211SP	KN211WP	KN211BP	KN111SP	KN111WP	KN111BP	KN711SP	KN711WP	KN711BP	KN211	KN311	KN811
Fast	KN212SP	KN212WP	KN212BP	KN112SP	KN112WP	KN112BP	KN712SP	KN712WP	KN712BP	KN212	KN312	KN812
Slow	KN213SP	KN213WP	KN213BP	KN113SP	KN113WP	KN113BP	KN713SP	KN713WP	KN713BP	KN213	KN313	KN813
High	KN214SP	KN214WP	KN214BP	KN114SP	KN114WP	KN114BP	KN714SP	KN714WP	KN714BP	KN214	KN314	KN814
Low	KN215SP	KN215WP	KN215BP	KN115SP	KN115WP	KN115BP	KN715SP	KN715WP	KN715BP	KN215	KN315	KN815
Inch	KN216SP	KN216WP	KN216BP	KN116SP	KN116WP	KN116BP	KN716SP	KN716WP	KN716BP	KN216	KN316	KN816
In	KN217SP	KN217WP	KN217BP	KN117SP	KN117WP	KN117BP	KN717SP	KN717WP	KN717BP	KN217	KN317	KN817
Jog	KN218SP	KN218WP	KN218BP	KN118SP	KN118WP	KN118BP	KN718SP	KN718WP	KN718BP	KN218	KN318	KN818
Jog For.	KN219SP	KN219WP	KN219BP	KN119SP	KN119WP	KN119BP	KN719SP	KN719WP	KN719BP	KN219	KN319	KN819
Jog Rev.	KN220SP	KN220WP	KN220BP	KN120SP	KN120WP	KN120BP	KN720SP	KN720WP	KN720BP	KN220	KN320	KN820
Lower	KN221SP	KN221WP	KN221BP	KN121SP	KN121WP	KN121BP	KN721SP	KN721WP	KN721BP	KN221	KN321	KN821
Out	KN222SP	KN222WP	KN222BP	KN122SP	KN122WP	KN122BP	KN722SP	KN722WP	KN722BP	KN222	KN322	KN822
Reset	KN223SP	KN223WP	KN223BP	KN123SP	KN123WP	KN123BP	KN723SP	KN723WP	KN723BP	KN223	KN323	KN823
Run	KN224SP	KN224WP	KN224BP	KN124SP	KN124WP	KN124BP	KN724SP	KN724WP	KN724BP	KN224	KN324	KN824
Start Jog	KN225SP	KN225WP	KN225BP	KN125SP	KN125WP	KN125BP	KN725SP	KN725WP	KN725BP	KN225	KN325	KN825
Test	KN226SP	KN226WP	KN226BP	KN126SP	KN126WP	KN126BP	KN726SP	KN726WP	KN726BP	KN226	KN326	KN826
Raise	KN227SP	KN227WP	KN227BP	KN127SP	KN127WP	KN127BP	KN727SP	KN727WP	KN727BP	KN227	KN327	KN827
Decrease	KN228SP	KN228WP	KN228BP	KN128SP	KN128WP	KN128BP	KN728SP	KN728WP	KN728BP	KN228	KN328	KN828
Increase	KN229SP	KN229WP	KN229BP	KN129SP	KN129WP	KN129BP	KN729SP	KN729WP	KN729BP	KN229	KN329	KN829
Left	KN230SP	KN230WP	KN230BP	KN130SP	KN130WP	KN130BP	KN730SP	KN730WP	KN730BP	KN230	KN330	KN830
Right	KN231SP	KN231WP	KN231BP	KN131SP	KN131WP	KN131BP	KN731SP	KN731WP	KN731BP	KN231	KN331	KN831
Cycle Start	KN232SP	KN232WP	KN232BP	KN132SP	KN132WP	KN132BP	KN732SP	KN732WP	KN732BP	KN232	KN332	KN832
Feed Start	KN233SP	KN233WP	KN233BP	KN133SP	KN133WP	KN133BP	KN733SP	KN733WP	KN733BP	KN233	KN333	KN833
Cycle Stop	KN234SP	KN234WP	KN234BP	KN134SP	KN134WP	KN134BP	KN734SP	KN734WP	KN734BP	KN234	KN334	KN834
Motor Run	KN236SP	KN236WP	KN236BP	KN136SP	KN136WP	KN136BP	KN736SP	KN736WP	KN736BP	KN236	KN336	KN836
Motor Stop	KN237SP	KN237WP	KN237BP	KN137SP	KN137WP	KN137BP	KN737SP	KN737WP	KN737BP	KN237	KN337	KN837
Power On	KN238SP	KN238WP	KN238BP	KN138SP	KN138WP	KN138BP	KN738SP	KN738WP	KN738BP	KN238	KN338	KN838
Pull To Start Push To Stop	N/A	N/A	N/A	KN179SP	KN179WP	KN179BP	KN779SP	KN779WP	KN779BP	N/A	KN379	N/A
For Selector Switch or Selector Push Button												
For.-Rev.	KN239SP	KN239WP	KN239BP	KN139SP	KN139WP	KN139BP	KN739SP	KN739WP	KN739BP	KN239	KN339	KN839
Hand-Auto.	KN240SP	KN240WP	KN240BP	KN140SP	KN140WP	KN140BP	KN740SP	KN740WP	KN740BP	KN240	KN340	KN840
High-Low	KN241SP	KN241WP	KN241BP	KN141SP	KN141WP	KN141BP	KN741SP	KN741WP	KN741BP	KN241	KN341	KN841
Jog-Run	KN242SP	KN242WP	KN242BP	KN142SP	KN142WP	KN142BP	KN742SP	KN742WP	KN742BP	KN242	KN342	KN842
Man.-Auto.	KN243SP	KN243WP	KN243BP	KN143SP	KN143WP	KN143BP	KN743SP	KN743WP	KN743BP	KN243	KN343	KN843
Off-On	KN244SP	KN244WP	KN244BP	KN144SP	KN144WP	KN144BP	KN744SP	KN744WP	KN744BP	KN244	KN344	KN844
On-Off	KN245SP	KN245WP	KN245BP	KN145SP	KN145WP	KN145BP	KN745SP	KN745WP	KN745BP	KN245	KN345	KN845
Open-Close	KN246SP	KN246WP	KN246BP	KN146SP	KN146WP	KN146BP	KN746SP	KN746WP	KN746BP	KN246	KN346	KN846
Raise-Lower	KN247SP	KN247WP	KN247BP	KN147SP	KN147WP	KN147BP	KN747SP	KN747WP	KN747BP	KN247	KN347	KN847
Run-Jog	KN248SP	KN248WP	KN248BP	KN148SP	KN148WP	KN148BP	KN748SP	KN748WP	KN748BP	KN248	KN348	KN848
Slow-Fast	KN250SP	KN250WP	KN250BP	KN150SP	KN150WP	KN150BP	KN750SP	KN750WP	KN750BP	KN250	KN350	KN850
Start-Stop	KN251SP	KN251WP	KN251BP	KN151SP	KN151WP	KN151BP	KN751SP	KN751WP	KN751BP	KN251	KN351	KN851
Up-Down	KN253SP	KN253WP	KN253BP	KN153SP	KN153WP	KN153BP	KN753SP	KN753WP	KN753BP	KN253	KN353	KN853
Low-High	KN254SP	KN254WP	KN254BP	KN154SP	KN154WP	KN154BP	KN754SP	KN754WP	KN754BP	KN254	KN354	KN854
Stop-Start	KN255SP	KN255WP	KN255BP	KN155SP	KN155WP	KN155BP	KN755SP	KN755WP	KN755BP	KN255	KN355	KN855
Left-Right	KN256SP	KN256WP	KN256BP	KN156SP	KN156WP	KN156BP	KN756SP	KN756WP	KN756BP	KN256	KN356	KN856
On-Auto	KN276SP	KN276WP	KN276BP	KN176SP	KN176WP	KN176BP	KN776SP	KN776WP	KN776BP	KN276	KN376	KN876
Auto-Off-Hand	KN258SP	KN258WP	KN258BP	KN158SP	KN158WP	KN158BP	KN758SP	KN758WP	KN758BP	KN258	KN358	KN858
For.-Off-Rev.	KN259SP	KN259WP	KN259BP	KN159SP	KN159WP	KN159BP	KN759SP	KN759WP	KN759BP	KN259	KN359	KN859
Hand-Off-Auto.	KN260SP	KN260WP	KN260BP	KN160SP	KN160WP	KN160BP	KN760SP	KN760WP	KN760BP	KN260	KN360	KN860
Man.-Off-Auto.	KN262SP	KN262WP	KN262BP	KN162SP	KN162WP	KN162BP	KN762SP	KN762WP	KN762BP	KN262	KN362	KN862
Open-Off-Close	KN263SP	KN263WP	KN263BP	KN163SP	KN163WP	KN163BP	KN763SP	KN763WP	KN763BP	KN263	KN363	KN863
Up-Off-Down	KN264SP	KN264WP	KN264BP	KN164SP	KN164WP	KN164BP	KN764SP	KN764WP	KN764BP	KN264	KN364	KN864
Low-Off-High	KN265SP	KN265WP	KN265BP	KN165SP	KN165WP	KN165BP	KN765SP	KN765WP	KN765BP	KN265	KN365	KN865
Jog-Stop-Run	KN267SP	KN267WP	KN267BP	KN167SP	KN167WP	KN167BP	KN767SP	KN767WP	KN767BP	KN267	KN367	KN867
High-Low-Off	KN270SP	KN270WP	KN270BP	KN170SP	KN170WP	KN170BP	KN770SP	KN770WP	KN770BP	KN270	KN370	KN870
High-Off-Low	KN277SP	KN277WP	KN277BP	KN177SP	KN177WP	KN177BP	KN777SP	KN777WP	KN777BP	KN277	KN377	KN877
Auto-Man.-Off	KN278SP	KN278WP	KN278BP	KN178SP	KN178WP	KN178BP	KN778SP	KN778WP	KN778BP	KN278	KN378	KN878

(1) Legend plate has red background with silver letters.
(2) Legend plate has red background with black letters.

Product range: page 5
Specifications: page 7
Dimensions: page 30
Mounting: page 31

Harmony™ 9001K/SK/KX 30 mm push buttons

9001K – Legend plates

Note: When ordering, add prefix "9001" to the reference.

Legend Plates–Special Marking

Legend Plate	Description		Reference
KN100●P (Plastic) *(1)* 2.25 in Square	Standard Markings		**See page 25**
	Special Marking *(2)*	Silver Field, Black Letters	**KN199SP**
		White Field, Black Letters	**KN199WP**
		Red Field, Black Letters	**KN199RP**
		Black Field, White Letters	**KN199BP**
KN200 Aluminum	Standard Markings		**See page 25**
	Special Marking *(2)*	Black Field	**KN299**
		Red Field	**KN299R**
KN200●P (Plastic) *(1)* 1.7 in Square	Standard Markings		**See page 25**
	Special Marking *(2)*	Silver Field, Black Letters	**KN299SP**
		White Field, Black Letters	**KN299WP**
		Red Field, Black Letters	**KN299RP**
		Black Field, White Letters	**KN299BP**
KN300 Aluminum	Standard Markings		**See page 25**
	Special Marking *(2)*	Black Field	**KN399**
		Red Field	**KN399R**
KN400 Aluminum	Blank		**KN400**
	Any Marking *(2)*		**KN499**
KN500 Aluminum	Standard Markings		**Select from page 25**
	Special Marking *(2)*	Black Field	**KN599**
		Green Red Field	**KN519**
KN600 Aluminum	Blank	Black Field	**KN600**
		Red Field	**KN600R**
	Any Marking *(2)*	Black Field	**KN699**
		Red Field	**KN699R**
KN700●P (Plastic) *(1)* 2.5 in Square	Standard Markings		**Select from page 25**
	Special Marking *(2)*	Silver Field, Black Letters	**KN799SP**
		White Field, Black Letters	**KN799WP**
		Red Field, Black Letters	**KN799RP**
		Black Field, White Letters	**KN799BP**
KN800 Aluminum	Standard Markings		**Select from page 25**
	Special Marking *(2)*	Blue Field	**KN899**
		Red Field	**KN899R**
KN900 Aluminum	Blank		**KN900**
	Any Marking *(2)*		**KN999**

(1) Other colors available (see table below).
(2) Specify marking required.

Plastic Legend Plates—Other Colors

	Plate Color	Letter Color	1.7 in Square	2.25 in Square	2.5 in Square
Blank Legend Plates	Yellow	Black	**KN200YP**	**KN100YP**	**KN700YP**
	Green	White	**KN200GP**	**KN100GP**	**KN700GP**
	Blue		**KN200LP**	**KN100LP**	**KN700LP**
	Red		**KN200CP**	**KN100CP**	**KN700CP**
	Orange		**KN200AP**	**KN100AP**	**KN700AP**
	Burnt Orange	Black	**KN200HP**	**KN100HP**	**KN700HP**
Special Engraved Legend Plates	Yellow	Black	**KN299YP**	**KN199YP**	**KN799YP**
	Green	White	**KN299GP**	**KN199GP**	**KN799GP**
	Blue		**KN299LP**	**KN199LP**	**KN799LP**
	Red		**KN299CP**	**KN199CP**	**KN799CP**
	Orange		**KN299AP**	**KN199AP**	**KN799AP**
	Burnt Orange	Black	**KN299HP**	**KN199HP**	**KN799HP**

Maximum Number of Lines and Characters for 9001KN Legend Plates

Reference	KN100	KN200	KN300	KN400	KN500	KN600	KN700	KN800	KN900
Max. No. of Char. per Line	16	14	18	18	8 per field	22	17	18	18 per pos.
Max. No. of Lines	2	1	3	2	2 per field	4	2	2	1 per pos.

Note: The maximum number of characters and lines is a practical maximum, based on a minimum size of characters to facilitate easy reading.

Circular Legends for Emergency Stop Mushroom Heads (yellow background)

Diameter	Text	Reference
60 mm	—	**KN9100**
	EMERGENCY STOP	**KN9330**
90 mm	—	**KN8100**
	EMERGENCY STOP	**KN8330**

Legend Plate Position #1

Min. Centerline Spacing, 9001K Control Units

Legend Plate	Operator	Centerline Spacing (in) A	B	C	D	E	F
Legend Plate Orientation Position #1							
KN2 **KN5**	Standard Push Button	1.75	1.31	1.44	2.25	1.69	0.88
	1.375 in Dia. Mushroom	1.75	1.31	1.44	2.25	1.69	0.88
	2.25 in Dia. Mushroom	2.25	1.31	1.44	2.25	2.25	1.12
	Selector Switch Knobs	1.75	1.31	1.44	2.25	1.69	0.88
KN3	Standard Push Button	2.00	1.31	1.44	2.25	1.75	0.88
	1.375 in Dia. Mushroom	2.00	1.31	1.44	2.25	1.75	0.88
	2.25 in Dia. Mushroom	2.25	1.31	1.44	2.25	2.25	1.12
	Selector Switch Knobs	2.00	1.31	1.44	2.25	1.75	0.88
KN4	Standard Push Button	1.94	1.31	1.44	2.25	1.62	0.88
	1.375 in Dia. Mushroom	1.94	1.31	1.44	2.25	1.62	0.88
	2.25 in Dia. Mushroom	2.25	1.31	1.44	2.25	2.25	1.12
	Selector Switch Knobs	1.74	1.31	1.44	2.25	1.62	0.88
KN6	Standard Push Button	2.38	1.62	1.44	2.25	2.25	1.12
	1.375 in Dia. Mushroom	2.38	1.62	1.44	2.25	2.25	1.12
	2.25 in Dia. Mushroom	2.38	1.62	1.44	2.25	2.25	1.12
	Selector Switch Knobs	2.38	1.62	1.44	2.25	2.25	1.12

Legend Plate Position #2

Legend Plate Orientation Position #2							
KN2 **KN5**	Standard Push Button	1.62	1.31	1.44	2.25	1.75	0.88
	1.375 in Dia. Mushroom	1.62	1.31	1.44	2.25	1.75	0.88
	2.25 in Dia. Mushroom	2.25	1.31	1.44	2.25	2.25	1.12
	Selector Switch Knobs	1.62	1.31	1.44	2.25	1.75	0.88
KN3	Standard Push Button	1.75	1.31	1.44	2.25	2.00	0.88
	1.375 in Dia. Mushroom	1.75	1.31	1.44	2.25	2.00	0.88
	2.25 in Dia. Mushroom	2.25	1.31	1.44	2.25	2.25	1.12
	Selector Switch Knobs	1.75	1.31	1.44	2.25	2.00	0.88
KN4	Standard Push Button	1.62	1.31	1.44	2.25	1.94	1.00
	1.375 in Dia. Mushroom	1.62	1.31	1.44	2.25	1.94	1.00
	2.25 in Dia. Mushroom	2.25	1.31	1.44	2.25	2.25	1.12
	Selector Switch Knobs	1.62	1.31	1.44	2.25	1.94	1.00
KN6	Standard Push Button	2.25	1.31	1.62	2.38	2.38	0.88
	1.375 in Dia. Mushroom	2.25	1.31	1.62	2.38	2.38	0.88
	2.25 in Dia. Mushroom	2.25	1.31	1.62	2.38	2.38	1.12
	Selector Switch Knobs	2.25	1.31	1.62	2.38	2.38	0.88

Special Legend Plates

9001KN500
(For Use with Dual Function Operators: KR6, KR7 and KR67)
Standard Markings

Reference	Green	Red
KN500	Blank	Blank
KN501	Start	Stop
KN502	On	Off

Reference	Black	Black
KN520	Blank	Blank
KN521	Start	Stop
KN522	On	Off
KN523	Forward	Reverse
KN524	Up	Down
KN525	High	Low
KN526	Open	Close

Product range: page 5
Specifications: page 7
Dimensions: page 30
Mounting: page 31

Schneider Electric

Harmony™ 9001K/SK/KX 30 mm push buttons

9001K – Accessories

Note: When ordering, add prefix "9001" to the reference.

Padlock Attachments

	Used On	Description	Reference
	Non-illuminated push button — Standard or mushroom (KR4, KR5 mushroom buttons only).	Holds button in depressed position and can be padlocked.	**K4**
	Non-illuminated push buttons with or without protective boots.	Holds button in depressed position when padlocked.	**K5**
	Non-illuminated push buttons with or without protective boots.	Holds button in depressed position when padlocked.	**K97**
	Non-illuminated push buttons, cover type attachment. KR, SKR	Attachment can be padlocked. Does not hold button in depressed position.	**K6**
	Push buttons, cover type attachment.	Spring loaded cover cannot be padlocked. Does not hold button in depressed position.	**K60**
	Push-pull operator and illuminated push buttons. KR8, KR9	Holds button in depressed position and can be padlocked.	**K62**
	KR11U and KR12U Interlocked Assembly	Holds maintained button in depressed position and can be padlocked.	**K96**
	9001KR9 Push-pull operators— Non-Illuminated and Illuminated	Holds button in depressed position. Can be padlocked.	**K162**

Mushroom Button Guards

Aluminum Mushroom Guard for 1.375 in Mushroom Button Operator (KR4, KR24)

Yellow Plastic Extended Mushroom Guard for 1.375 in and 1.625 in Mushroom Button Operators

Aluminum Mushroom Guard for 2.25 in Mushroom Button Operator

Reference	Reference	Used On	Reference	Used On
K48	**K56▲** *(1)*	KR4	**K68**	KR5
	K56■M *(2)*	KR8, KR9	**K685**	KR25

(1) Replace ▲ with B=Black, G=Green, R=Red or Y=Yellow.
(2) Replace ■ with R=Red or Y=Yellow. The mushroom guard has finger holes for push-pull operators.

Padlock Attachments

	Used On	Description	Reference
	Selector switches and potentiometers (will not work with gloved-hand knob).	Cover type attachment that can be padlocked to keep unauthorized personnel from tampering with the operator.	**K7**
	Selector switches and potentiometers (will not work with gloved-hand knob).	Same as 9001K7 but with spring loaded lockout cover.	**K107**
	Illuminated push buttons (with or without guard) and key operated push buttons.	Cover type attachment that can be padlocked to keep unauthorized personnel from tampering with the operator.	**K108**
	Illuminated push buttons (with or without guard) and key operated push buttons.	Same as 9001K108 but with spring loaded lockout cover.	**K109**
	Maintained push-pull operators using 1.375 in dia. mushroom buttons (-20 series as shown on page 28).	Cover type attachment that holds mushroom button in depressed position and can be padlocked.	**K110**

Protective Boots

KU1

KU17

KU37

KU27

These 9001KU protective boots are recommended for very dirty environments or severe hose down, but they are not required for UL Type 4 rating on the 9001K operators. The 9001K1 wrench (see page 29) is required for installation of these boots.

For Non-Illuminated Push Buttons *(3)*		Clear Color for	Reference
Color	**Reference**	Standard knob selector switch	**KU17**
Black	**KU1**	Gloved-hand cap for use on standard knob selector switch	**KU18**
Red	**KU2**		
Blue	**KU3**		
Brown	**KU4**	Standard pilot light and maintained contact push buttons	**KU27**
Green	**KU5**		
Yellow	**KU6**		
Clear	**KU7**	Push-to-test and illuminated push button without guard	**KU37**
Clear	**KU8**		
(Provides Full Guard)		Illuminated push button with guard	**KU47**

(3) Use KU27 for maintained contact push buttons.

Closing Plates

Round (1-1/2 in Dia.)

Description	Reference
Gray	**K51** *(4)*
Black	**K52** *(4)*

(4) Meets UL and NEMA 1, 2, 3, 4, 4X, 6, 12 and 13.

Product range: page 5 | Specifications: page 7 | Dimensions: page 30 | Mounting: page 31

Harmony™ 9001K/SK/KX 30 mm push buttons

9001K – Accessories

Note: When ordering, add prefix "9001" to the reference.

Accessories

Description	Color	Reference	Package Qty.
Color inserts for KR1, KR2, KR3, KR11, KR12, KRD, T, TRD	Black	**T8BK**	10
	Blue	**T8BE**	
	Gray	**T8GY**	
	Green	**T8GN**	
	Orange	**T8OE**	
	Red	**T8RD**	
	Universal *(1)*	**T8U**	7
	White	**T8WH**	10
	Yellow	**T8YW**	
1.375 in Snap-in Mushroom knob for KR4 *(3)*	Black	**K16B**	1
	Blue	**K16L**	
	Green	**K16G**	
	Orange	**K16S**	
	Red	**K16R**	
	Red *(2)*	**K16R05**	
	Yellow	**K16Y**	
2-1/4 in Snap-in Mushroom knob for KR5 *(4)*	Black	**K17B**	1
	Blue	**K17L**	
	Green	**K17G**	
	Orange	**K17S**	
	Red	**K17R**	
	Red *(2)*	**K17R05**	
	Yellow	**K17Y**	
1-3/8 in Screw-on Mushroom knob for KR24 *(5)*	Black	**K92B**	1
	Blue	**K92L**	
	Green	**K92G**	
	Orange	**K92S**	
	Red	**K92R**	
	Yellow	**K92Y**	
2-1/4 in Screw-on Mushroom knob for KR25 *(6)*	Black	**K93B**	1
	Blue	**K93L**	
	Green	**K93G**	
	Orange	**K93S**	
	Red	**K93R**	
	Yellow	**K93Y**	
Push-pull Knobs for KR8, KR9 Operators	Amber	**A22**	1
	Black *(7)*	**B23**	
	Blue	**L22**	
	Clear	**C22**	
	Green	**G22**	
	Orange *(7)*	**S23**	
	Red	**R22**	
	Red *(10)*	**R2205**	
	White	**W22**	
	Yellow	**Y22**	
Color Inserts for Dual Function Operators KR6, KR7, KR67	Black	**B19**	10
	Green	**G19**	
	Red	**R19**	
	Universal *(8)*	**U19**	
Standard Color Caps for Illuminated Push Buttons K1L, K2L, K3L	Amber	**A7**	1
	Blue	**L7**	
	Clear	**C7**	
	Green	**G7**	
	Red	**R7**	
	White	**W7**	
	Yellow	**Y7**	
Knob for KR9R94	Red	**R94**	1
Metal Knob for KR24	Red	**K92RM**	1
	Green	**K92GM**	
	Black	**K92BM**	
Metal Knob for KR25	Red	**K93RM**	1
	Green	**K93GM**	
	Black	**K93BM**	
Metal Knob for KR9 (40 mm)	Red	**K94RM**	1
	Green	**K94GM**	
	Black	**K94BM**	
Metal Knob for KR9 (60 mm)	Red	**K95RM**	1
	Green	**K95GM**	
	Black	**K95BM**	

Description	Color	Reference	Package Qty.
1-3/8 in Mushroom Knob for Illuminated Push Buttons K2L *(9)*	Amber	**A20**	1
	Blue	**L20**	
	Clear	**C20**	
	Green	**G20**	
	Red	**R20**	
	White	**W20**	
	Yellow	**Y20**	
2-1/4 in Mushroom Knob for Illuminated Push Buttons K2L *(9)*	Amber	**A21**	1
	Blue	**L21**	
	Clear	**C21**	
	Green	**G21**	
	Red	**R21**	
	White	**W21**	
	Yellow	**Y21**	
Plastic Fresnel Pilot Light Lens for KP, KT	Amber	**A31**	1
	Blue	**L31**	
	Clear	**C31**	
	Green	**G31**	
	Red	**R31**	
	White	**W31**	
	Yellow	**Y31**	
Domed Plastic Pilot Light Lens for KP, KT	Amber	**A9**	1
	Blue	**L9**	
	Clear	**C9**	
	Green	**G9**	
	Red	**R9**	
	White	**W9**	
	Yellow	**Y9**	
Glass Pilot Light Lens for KP, KT	Amber	**A6**	1
	Blue	**L6**	
	Clear	**C6**	
	Green	**G6**	
	Red	**R6**	
	White	**W6**	
	Yellow	**Y6**	
Standard Selector Switch Knob for 9001K Selector Switches	Amber	**A8**	1
	Black *(7)*	**B11**	
	Blue	**L8**	
	Clear	**C8**	
	Green	**G8**	
	Orange *(7)*	**S11**	
	Red	**R8**	
	White	**W8**	
	Yellow	**Y8**	
Gloved-Hand Selector Switch Knob for 9001K Selector Switches	Amber	**A24**	1
	Black *(7)*	**B25**	
	Blue	**L24**	
	Clear	**C24**	
	Green	**G24**	
	Orange *(7)*	**S25**	
	Red	**R24**	
	White	**W24**	
	Yellow	**Y24**	
Color Inserts for KQ and TQ Selector Push Buttons	Black	**T5BK**	10
	Blue	**T5BE**	
	Green	**T5GN**	
	Orange	**T5OE**	
	Red	**T5RD**	
	White	**T5WH**	
	Yellow	**T5YW**	

Description	Cam	Reference
Selector Switch Cams	B	**K13B**
	C	**K13C**
	D	**K13D**
	E	**K13E**
	F	**K13F**
	G	**K13G**
	H	**K13H**
	J	**K13J**
	L	**K13L**
	M	**K13M**

(1) Includes one each of the following color inserts: Black, Red, Green, Yellow, Orange, Blue, and White.
(2) "EMERGENCY STOP" is in raised letters and hot stamped white across the front of the mushroom button.
(3) The mushroom button cap listed here may be assembled to a 9001KR1U to form a 9001KR4.
(4) The mushroom button cap listed here may be assembled to a 9001KR1U to form a 9001KR5.
(5) The mushroom button cap listed here may be assembled to a 9001KR20 to form a 9001KR24.
(6) The mushroom button cap listed here may be assembled to a 9001KR20 to form a 9001KR25.
(7) These color caps are opaque and are for use on non-illuminated operators only.
(8) Includes two of each of the following color inserts: Black, Red, and Green.
(9) May be used on KR8 and KR9 operators. Order mushroom button and K54 adapter (no charge) from page 29. Using the K54 adapter voids Type 6 rating.
(10) Red knob with "Push Emergency Stop" marked on top of knob.

Harmony™ 9001K/SK/KX 30 mm push buttons

9001K – Replacement parts

Ring Nuts

Used On	Reference
K1L	**9001K44**
K30-K37	**9001K45**
K70-K73	**9001K45**
K20, K21, K22, K23	**9001K45**
K20, K21, K22, K23 *(1)*	**9001K46**
K2L	**9001K49**
K3L (complete)	**9001K111**
K3L (metal top only)	**6515802701**
KP, KTR	**9001K41**
KR1	**9001K41**
KR11	**9001K42**
KR12 *(1)*	**9001K42**
KR12 *(2)*	**9001K41**
KR13, 14, 15	**9001K55**
KR2	**9001K42**
KR20	**9001K49**
KR24	**9001K49**
KR25	**9001K49**
KR3	**9001K40**
KR4	**9001K41**
KR5	**9001K41**
KR6	**9001K47**
KR67	**9001K47**
KR7	**9001K47**
KR8	**9001K58**
KR9	**9001K41**
KS	**9001K45**
KS *(3)*	**9001K46**
KT	**9001K49**

(1) Maintained button of two button operator.
(2) Momentary button of two button operator.
(3) Secondary ring nut (holds knob on selector switch or potentiometer).

Replacement Lamps For Series A–F (black) Light Modules

Light Module Reference	Lamp Number (ANSI)	Schneider Electric Replacement Lamp Reference
KM1	GE44 *(4)*	**—**
KM2	GE1490	**2550101003**
KM3	GE44 *(4)*	**—**
KM4	GE1490	**2550101003**
KM5	GE44 *(4)*	**—**
KM6	GE44 *(4)*	**—**
KM7	GE44 *(4)*	**—**
KM8	GE44 *(4)*	**—**
KM9	GE755	**2550101020**
KM11	CMDK1A5	**2550105014**
KM12	CMDK1A5	**2550105014**
KM13	CMDK1A5	**2550105014**
KM14	CMDK1A5	**2550105014**
KM15	CMDK1A5	**2550105014**
KM21	SYL12PSB	**2550105003**
KM22	SYL12PSB	**2550105003**
KM23	SYL28PSB	**2550105008**
KM25	SYL120PSB	**2550105005**
KM31	SYL6PSB	**2550105007**
KM32	SYL12PSB	**2550105003**
KM34	SYL24PSB	**2550105004**
KM35	SYL28PSB	**2550105008**
KM36	SYL48PSB	**2550105009**
KM37	SYL60PSB	**2550105010**
KM38	SYL120PSB	**2550105005**

(4) GE44 and GE755 are interchangeable (GE755 gives longer life). If a GE44 lamp is ordered, a GE755 (2550101020) will be substituted. For a replacement lamp in a current series light module see the light module listing on page 24.

Repair Parts

Description	Reference
E10 Key	**2941101100**
Gray cap for KR11 or KR12	**3105217001**
Clear plastic top (only) for 9001K44 Ring Nut	**4487D63XI**
Gasket for 9001K Push-pull Knob	**6509701801**
Gasket for Plastic Illuminated Lens	**6509701901**
Gasket for 9001K selector switch knob	**3105406401**
Black Compensating Gasket (9001K Operators)	**6509702001**
Liner for Non-Illuminated Operators	**6509704901**
Locking Thrust Washer	**6512231201**
Nylon Spacer	**6509705001**
Push-pull Mushroom Adapter *(5)*	**9001K54**
Rubber Boot for Joystick	**6512243201**
Knob on Joysticks without latch	**4458D20X3**
Knob for SK Potentiometer	**3105404408**
Fingersafe Cover for 9001KM	**6508804101**

(5) Allows Type -20 and -21 mushroom color caps to be used on push-pull operators. Use of 9001K54 voids Type 6 rating.

KU Replacement Ring Nuts (Threaded Inside and Out)

Used On	Reference
KU1 through KU8, KU27, KU37, KU47	**3105204101**
KU17, KU18	**3105205901**

Interlock

For mechanically interlocking two push buttons so that only one button can be depressed at a time. A **K3** *attachment is furnished with the* **9001KR11** *and* **KR12** *operators. However, these are maintained operators and the* **K3** *interlock serves to release one of the buttons when the other is depressed. When used with momentary contact buttons, the* **K3** *interlock* **does not** *hold the buttons in the depressed position. It simply prevents pushing both buttons at the same time.*

The **K3** *interlock is mounted behind the operators. Operators not included.*

Reference
9001K3

Screwdriver

Reference	
9001K69	*Used to tighten mounting screws on contact blocks and light modules.*

Wrenches

K95

K1

Where Used	Reference
For tightening ring nuts on 22 and 30 mm control units	**9001K95**
For protective cap kits	**9001K1**

Product range: page 5
Specifications: page 7
Dimensions: page 30
Mounting: page 31

Harmony™ 9001K/SK/KX 30 mm push buttons

9001K

Dimensions

Push buttons

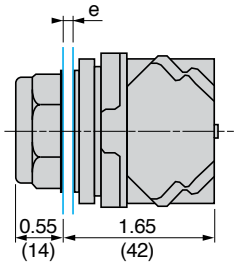

e: panel thickness 1 to 6 mm

Full guard 9001KR1●●●

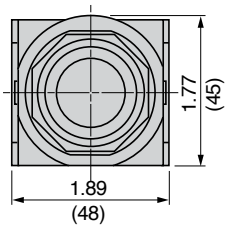

No guard 9001KR3●●●

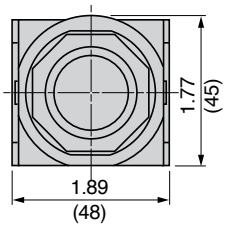

No guard with extended guard 9001KR2●●●

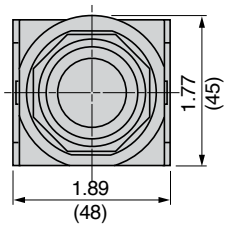

Mushroom head push buttons

Spring return 35, 57 and 60 mm	a = 28 mm
Push-pull 35 to 60 mm	a = 32 mm

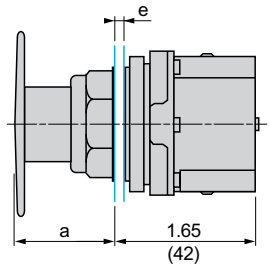

e: panel thickness 1 to 6 mm

Spring return 35 mm: 9001KR24●H13, 9001KR4RH6, 9001KR9R20H6

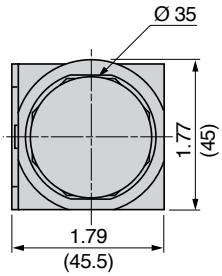

Spring return 57 mm: 9001KR25●H13, 9001KR5RH6

Spring return 60 mm: 9001KR25●M

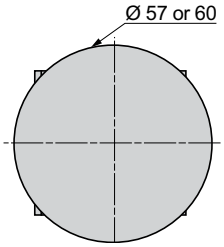

Push-pull 35 mm: 9001KR9R20H6

Push-pull 40 mm: 9001KR24●M 9001KR9●M94

Push-pull 41 mm: 9001KR9●H13, 9001KR9R94H13 9001KR9RH6 9001KR8●H25

Push-pull 57 mm: 9001KR9R21H6

Push-pull 60 mm: 9001KR9●M95

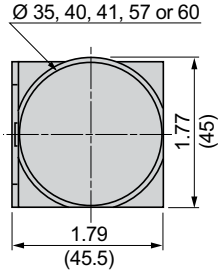

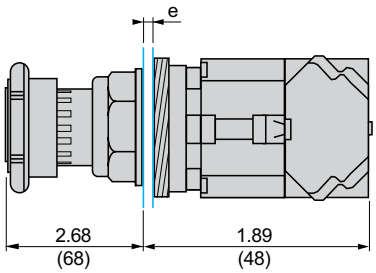

e: panel thickness 1 to 6 mm

Turn-to-release 9001KR16H13, 9001KR16H2 and 9001KR16

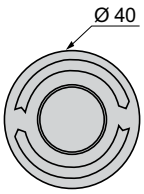

Selector switches

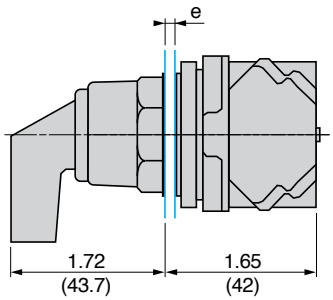

e: panel thickness 1 to 6 mm

Gloved handle 9001KS●●FBH●●

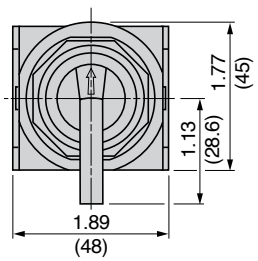

Dual Dimensions: in (mm)

Product range: page 5
Specifications: page 7
References: page 10
Mounting: page 31

Schneider Electric

Dimensions *(continued)*

Selector switches *(continued)*

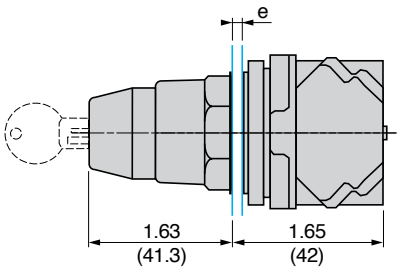

e: panel thickness 1 to 6 mm

Key switches 9001KS●●K●●● (for the chromium metal bezel range only)

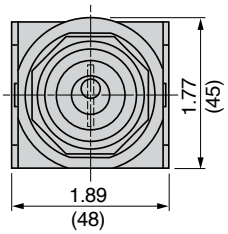

Mounting

Contact block mounting position

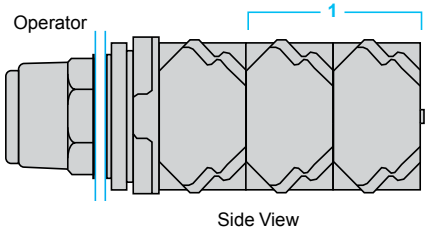

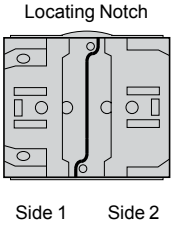

1 For Maximum Contact Block Usage, see page 22.

Panel cut-out

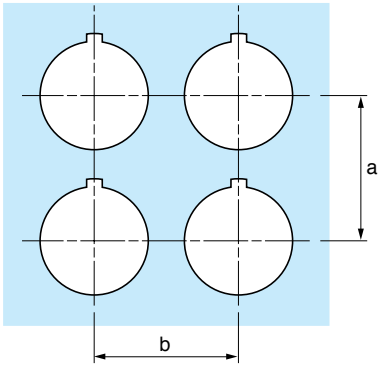

Individual cut-outs detail

2 alternatives

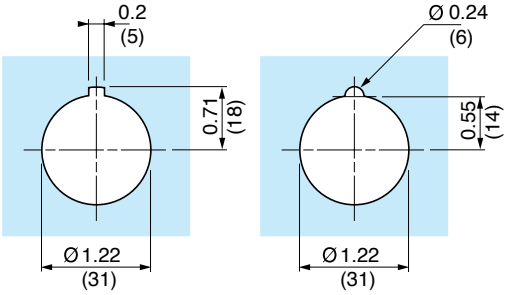

Preferred Cut-Out Alternate Cut-Out

Use Greenlee Tool #60242 for punching hole and notch.

Type of 9001K unit	Legend plate	a: in (mm)	b: in (mm)
All units except 57 mm mushroom head push buttons	9001KN2●●	2.25 (57.2)	1.75 (44.5)
	9001KN3●●	2.25 (57.2)	2.00 (50.8)
57 mm mushroom head push buttons	9001KN2●●	2.25 (57.2)	2.25 (57.2)
	9001KN3●●	2.25 (57.2)	2.25 (57.2)

Dual Dimensions: in (mm)

Dimensions *(continued)*

Pilot lights

With BA 9s bulb 9001KP●●●

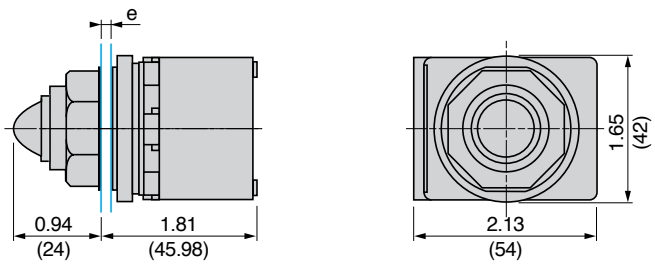

e: panel thickness 1 to 6 mm

Illuminated mushroom head push buttons

9001KR●P●●●

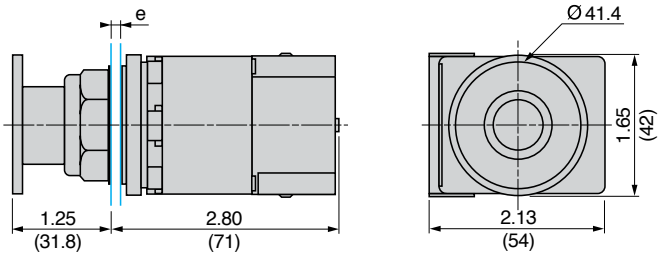

e: panel thickness 1 to 6 mm

Illuminated push buttons, spring return

Full guard 9001K3L●●●●●H13

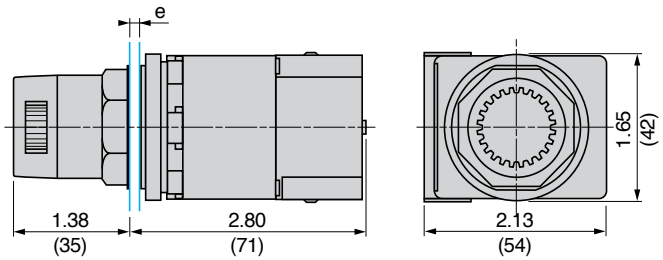

e: panel thickness 1 to 6 mm

Joystick controllers (for the chromium metal bezel range only)

9001K●●H●

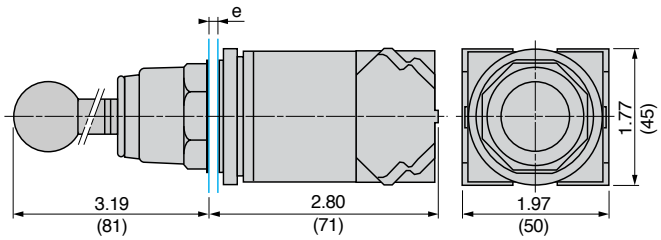

e: panel thickness 1 to 6 mm

No guard 9001K2L●●●●●H13

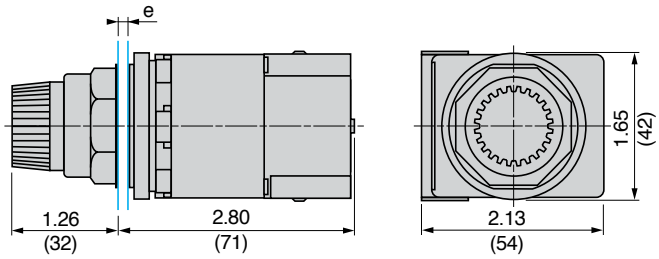

e: panel thickness 1 to 6 mm

Heads for spring return push buttons

9001KR●U

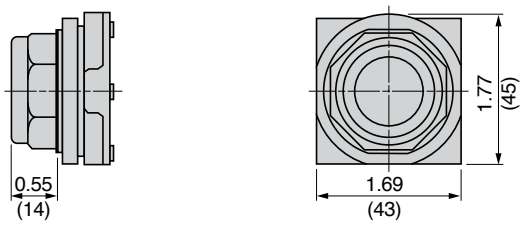

Push-to-test, no guard 9001KT●●●●●31

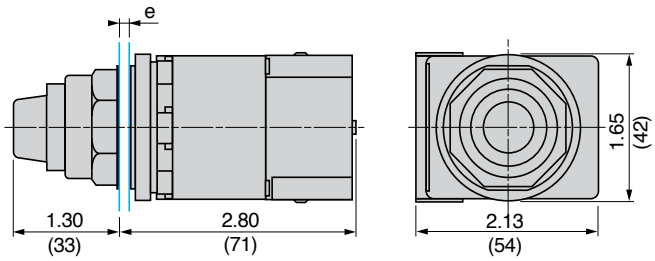

e: panel thickness 1 to 6 mm

Boots for push buttons

9001KU●

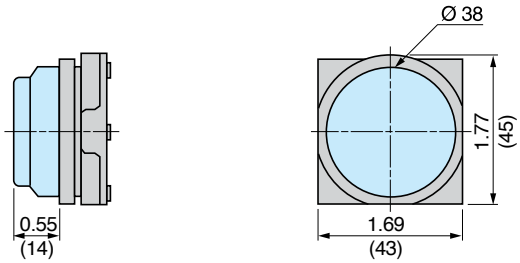

Dual Dimensions: in (mm)

Dimensions *(continued)*

Rod for wobble stick

9001K8

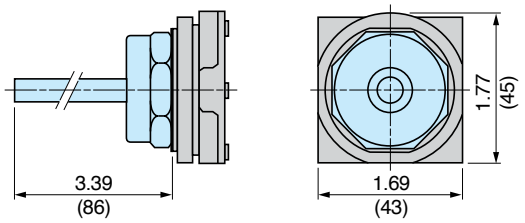

Light blocks for pilot lights and illuminated push buttons

9001KM●

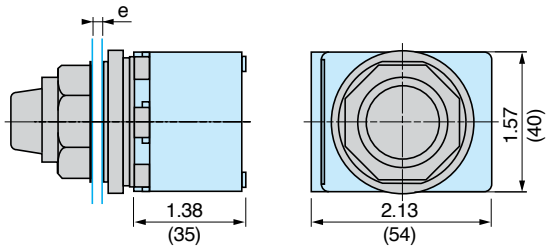

e: panel thickness 1 to 6 mm

Contact blocks for push buttons (including illuminated)

9001KA●

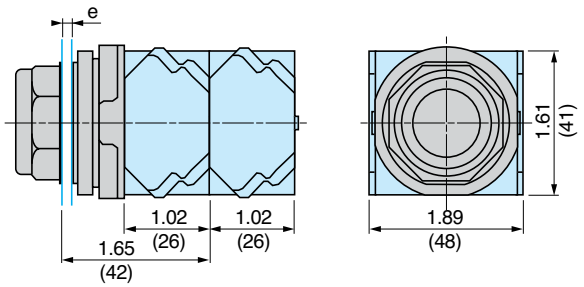

e: panel thickness 1 to 6 mm
It is not possible to mount complementary contact blocks 9001KA4 to KA6.

Legend plates

Aluminium plates 9001KN1●●, 9001KN2●●, 9001KN7●●

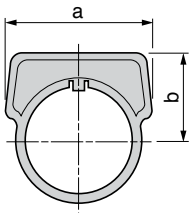

Legend plate	a: in (mm)	b: in (mm)
9001KN2●●	1.625 (41)	0.969 (24)
9001KN3●●	1.750 (45)	1.234 (31)

Plastic plates 9001KN1●●P, 9001KN2●●P, 9001KN7●●P

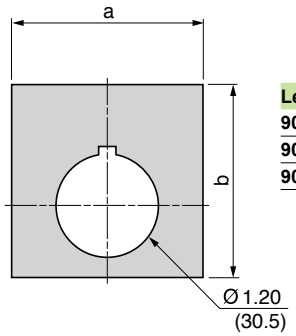

Legend plate	a: in (mm)	b: in (mm)
9001KN1●●P	2.25 (57)	2.25 (57)
9001KN2●●P	1.75 (45)	1.75 (45)
9001KN7●●P	2.50 (63)	2.50 (63)

Interlocked push buttons

9001KR11, 9001KR12, and 9001K3 interlock

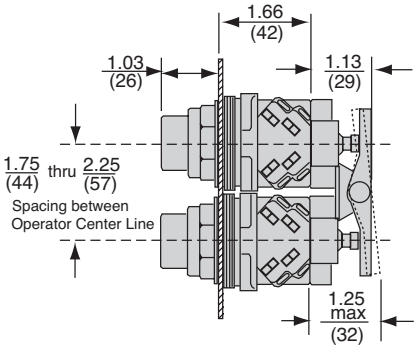

Potentiometer

9001K20 *(1)*, **9001K21** *(2)*

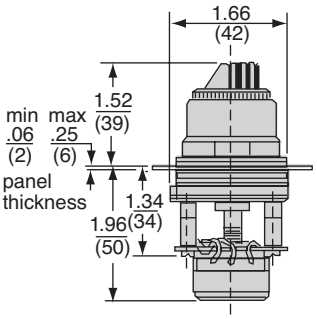

(1) Without potentiometer
(2) With potentiometer

9001K22 *(1)*, **9001K23** *(2)*

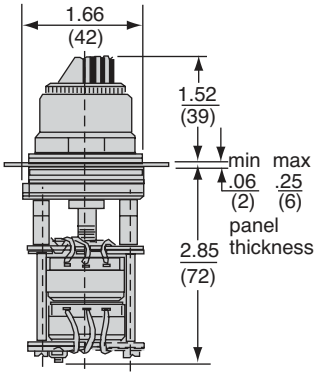

(1) Without potentiometer
(2) With potentiometer

Dual Dimensions: in (mm)

Dimensions *(continued)*

Time delay push button
9001KRD

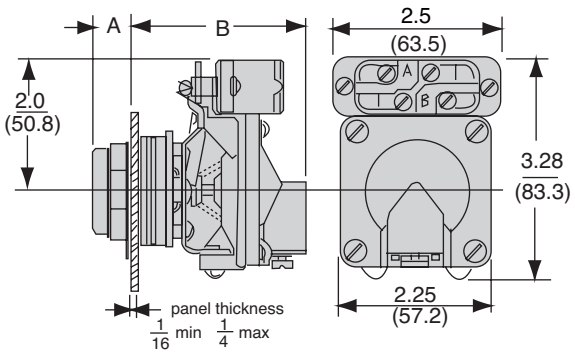

	a		b
9001KRD1UH●	Full guard	9/16	2-1/2
9001KRD2UH●	Extended guard	11/16	2-1/2
9001KRD3UH●	No guard	9/16	2-1/2

Alternate action—Push-on, push-off module
9001K85

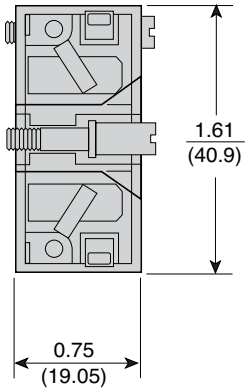

Emergency break glass operator
9001K15

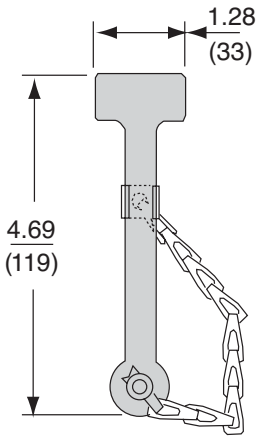

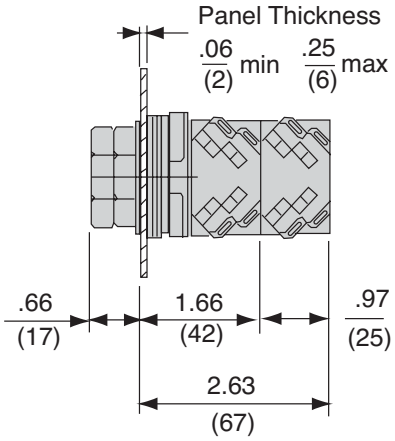

Rocker arm operating lever
9001K50

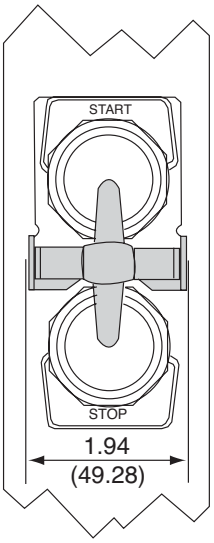

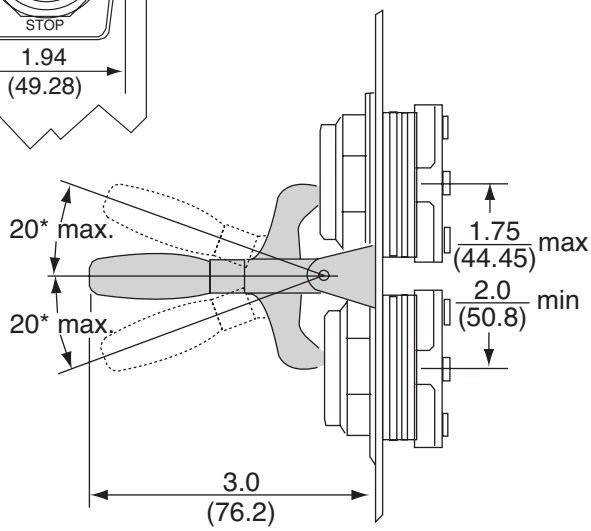

Dual Dimensions: in (mm)

Dimensions *(continued)*

Padlock attachments

9001K4

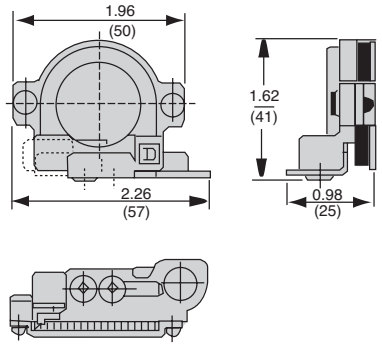

9001K96

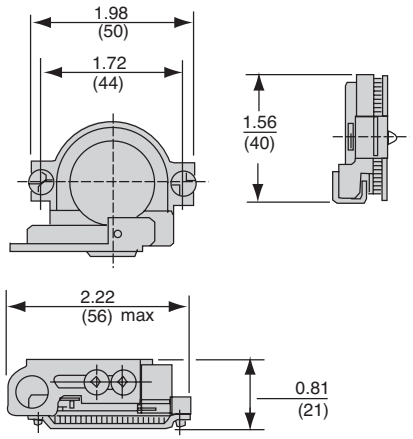

9001K7, 9001K107, 9001K108, 9001K109, 9001K113

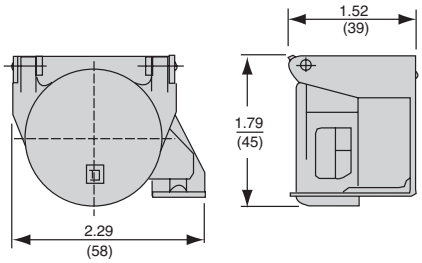

9001K6, 9001K60, 9001K97

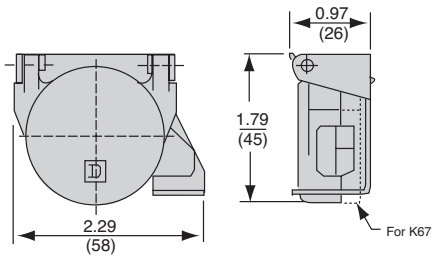

9001K62

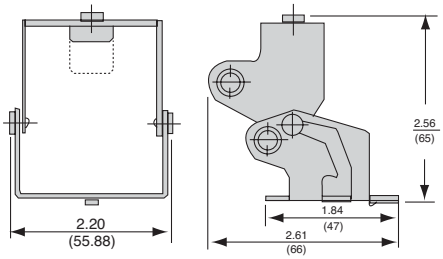

9001K5

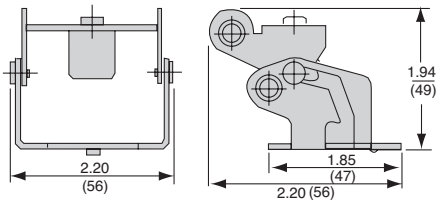

Mushroom button guards

9001K48

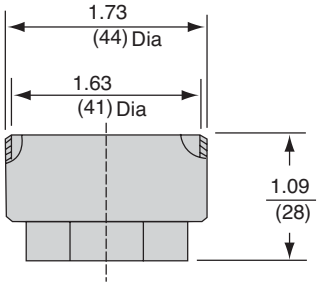

9001K56Y, 9001K56YM *(1)*

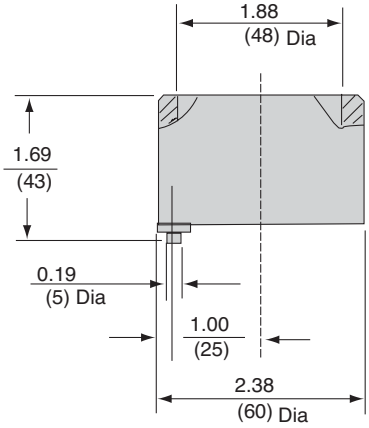

9001K68

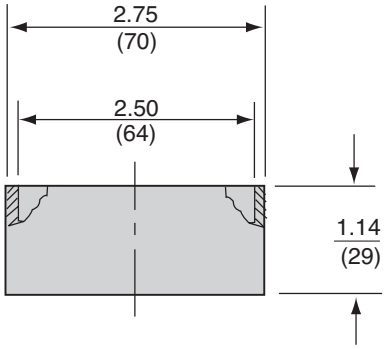

(1) 9001K56YM includes finger holes.

Dual Dimensions: in (mm)

Harmony™ 9001K/SK/KX 30 mm push buttons

9001SK – Complete units

Complete units

Contact functions

Push buttons, spring return

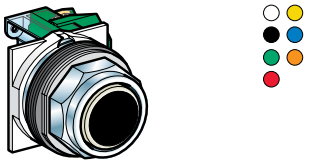

Full guard
9001SKR1●●● See page 41

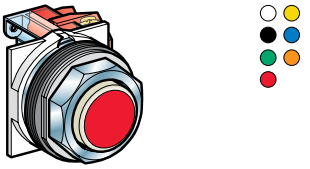

No guard
9001SKR3●●● See page 41

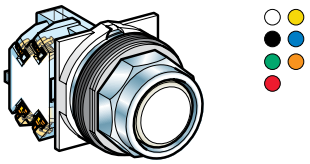

Extended guard
9001SKR2●●● See page 41

Mushroom head push buttons

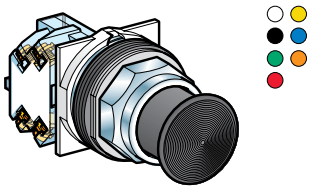

Spring return 1-3/8 or 2-1/4 in (35 or 57 mm)
9001SKR2●●H13 See page 41

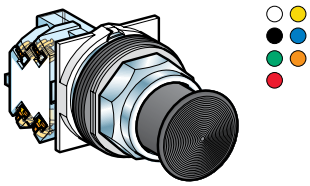

Push-pull 1-3/8, 1-5/8 or 2-1/4 in (35, 41 or 57 mm)
9001SKR●●● See page 41

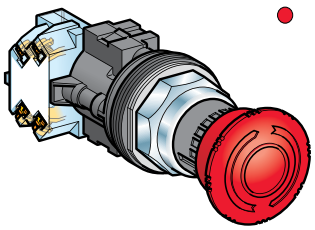

Turn-to-release, trigger action
9001SKR16 *(1)* See page 43

Selector switches

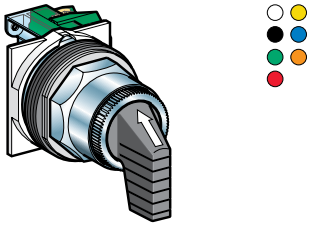

Selector switches
9001SKS●●FBH●● See page 44

Light functions

Pilot lights

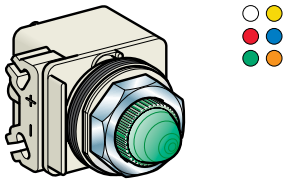

BA 9s base mounted super bright LED
9001SKP●●● See page 48

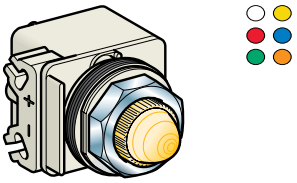

BA 9s incandescent bulb
9001SKP●●● See page 48

(1) Complies with EN418/ISO13850 standards for Emergency Stop push buttons when used with circular Legend Plate 9001KN8330 (90 mm diameter) or 9001KN9330 (60 mm diameter). See page 56.

Harmony™ 9001K/SK/KX 30 mm push buttons

9001SK – Complete units, components and accessories

Complete units

Combined contact and light functions

Illuminated push buttons, spring return

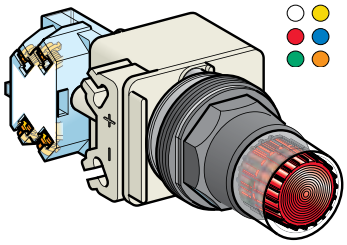

Full guard
9001SK1L●●● See page 42

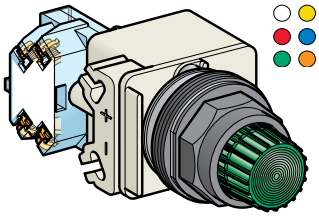

No guard
9001SK2L●●● See page 42

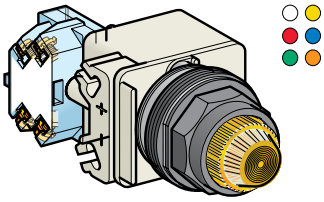

Push-to-test, no guard
9001SKT●●●31 See page 48

1-5/8 in (41 mm) mushroom head illuminated push buttons

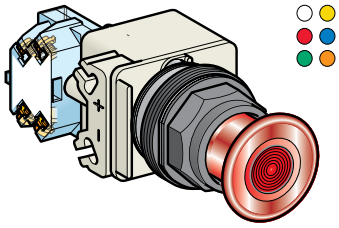

2-Position, push-pull
9001SKR9P●●● See page 43

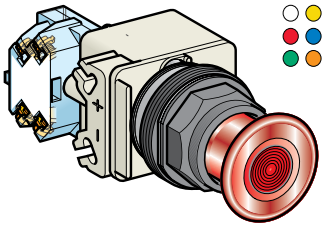

3-Position, push-pull
9001SKR8P●●● See page 43

Separate components and accessories

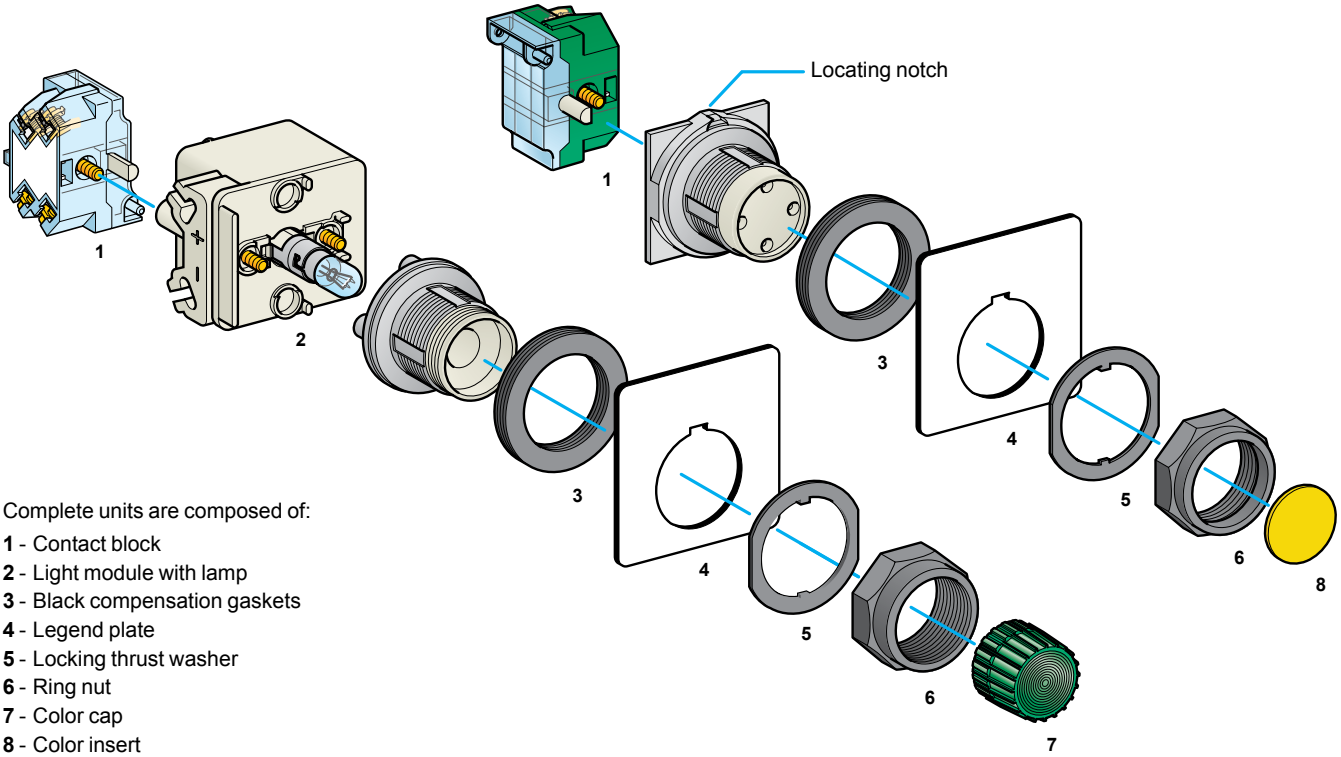

Complete units are composed of:

1 - Contact block
2 - Light module with lamp
3 - Black compensation gaskets
4 - Legend plate
5 - Locking thrust washer
6 - Ring nut
7 - Color cap
8 - Color insert

Specifications: page 38
References: page 41
Dimensions: page 60
Mounting: page 61

Harmony™ 9001K/SK/KX 30 mm push buttons

9001SK

Environmental specifications

Conforming to standards	CE Marked, RoHS compliant		EN/IEC 60947-1, EN/IEC 60947-5-1, EN/IEC 60947-5-4, JIS C 4520 and 852, UL 508, CSA C22-2 n° 14, CE marked, RoHS compliant
Product certifications	UL File E78403 CCN NKCR; CSA File LR25490 Class 3211-03		UL File E78403, CCN NKCR and CSA File LR25490, Class 3211-03
Protective treatment standard version			"TC"
Ambient air temperature around the device	Storage	**°F (°C)**	-40 to +158 (-40 to +70)
	Operation	**°F (°C)**	-13 to +158 (-25 to +70)
Vibration resistance	Conforming to IEC 60068-2-6		Frequency: 2 to 500 Hz: 7gn Ford Standard EA-1
Shock resistance	Conforming to IEC 60068-2-27		Half sine wave: 50 gn
Electric shock protection	Conforming to IEC 61140		Class II
Degree of protection	Conforming to EN/IEC 60529		IP 66
	Conforming to NEMA		Types 1, 2, 3, 3R, 4, 12 and 13
Mechanical life (in millions of operating cycles)	Push buttons, spring return		5
	Illuminated push buttons		5
	Selector switches and key switches		0.5
Mounting position			All positions

Electrical characteristics of contact blocks

Rated operational characteristics	∿ AC-15		3 A, 240 V			
	⎓ DC-13		0.55 A, 125 V			
Rated insulation voltage	Conforming to EN/IEC 60947-1	**V**	Ui = 250 degree of pollution 3 (except pilot lights with incandescent bulb: degree of pollution 2)			
Rated impulse withstand voltage	Conforming to EN/IEC 60947-1	**kV**	Uimp = 2.5			
Contact material	Normal environment and usage		Silver alloy			
Contact operation	"N/C" ou "N/O"		Slow break			
Positive operation	Conforming to EN/IEC 60947-5-1	**N**	N/C contact(s) with positive opening operation			
Short-circuit protection	Conforming to EN/IEC 60947-5-1	**A**	Cartridge fuse mounted upstream: 10			
Cabling capacity (9001KA contact blocks and 9001KM light modules)	Conforming to EN/IEC 60947-1	**mm²** **mm²**	Screw clamp terminals (cross headedslotted screw) Mini: 1 x 0.22 Maxi: 2 x 1.5 Recommended tightening torque: 0.8 N.m (10 in-lbs)			
Thermal current	Ith	**A**	10			
Maximum operation current	a.c. supply: utilization category AC-15 NEMA A600		Contact making capacity			
		V **A** **VA**	120 60 7200	240 30 7200	480 15 7200	600 12 7200
			Breaking capacity			
		V **A** **VA**	120 6 720	240 3 720	480 1.5 720	600 1.2 720
	d.c.supply: utilization category DC-13 NEMA Q600		Contact making capacity and breaking capacity			
		V **A**	125 0.55	250 0.27	600 0.1	

Product range: page 36
References: page 41
Dimensions: page 60
Mounting: page 61

Harmony™ 9001K/SK/KX 30 mm push buttons

9001SK

Basic Operators

(For Color Caps, Mushroom Buttons, Knobs, Selector Switch Cams, Contact Blocks, Light Modules and Legend Plates, see page 51.)

Description	UL Types/NEMA Types 4, 4X, 13
Non Illuminated Push Button (Full Guard)	**9001SKR1**
Non Illuminated Push Button (Extended Guard)	**9001SKR2**
Non Illuminated Push Button (No Guard)	**9001SKR3**
Non Illuminated Push Button (Mushroom Button/screw on)	**9001SKR20**
Non Illuminated Dual Push Button (Momentary)	**–**
Non Illuminated Dual Push Button (Momentary Interlocked)	**–**
Non Illuminated Dual Push Button (Maintained Interlocked)	**–**
Momentary Pull - Maintained Neutral - Momentary Push	**9001SKR8** *(1)*
Maintained Pull - Maintained Push	**9001SKR9** *(1)*
Illuminated Push Button (Full Guard - Plastic Top)	**9001SK1L** *(2)*
Illuminated Push Button and Push-to-test (No Guard)	**9001SK2L** *(2) (3)*
Illuminated Push Button (Full Guard - Metal Top)	**–**
Standard Pilot Light	**9001SKP**
2-Position Selector Switch	**9001SKS1** *(1)*, **9001SKS2** *(1)*, **9001SKS3** *(1)*
3-Position Selector Switch	**9001SKS4** *(1)*, **9001SKS5** *(1)*, **9001SKS6** *(1)*, **9001SKS7** *(1)*
4-Position Selector Switch	**9001SKS8** *(1)*
Trigger-Action Emergency Stop	**9001SKR16** *(1)*

(1) Operator can be converted to an illuminated operator by removing the liner (6509704901) and adding a light module.
(2) Operator can be converted to a non-illuminated operator by adding liner (6509704901).
(3) Operator includes jumper wires for push-to-test conversion.

Non Hazardous Locations:

File E42259
CCN NKCR

File LR25490
Class 3211 03

Marking

Hazardous Locations (Reed contact blocks, see page 53):

File E10054
CCN NOIV

File LR26817
Class 3218 02

Marking

9001SK Operator Materials:

Push Button and Push-to-test Pilot Light
(9001SKR and 9001SKT)

Base – Thermoplastic Polyester
Stem – Acetal (non-illuminated push button)
Thermoplastic Polyester (illuminated push button and push-to-test pilot light)
Seal – Nitrile
Gasket – Nitrile
Spring – 302 Stainless Steel
Spring Support – CRS
Lock Ring – Nylon
Trim Washer – Polypropylene
Locking Thrust Washer – Thermoplastic Polyester
Ring Nut – Thermoplastic Polyester
Color Insert – Polyethylene (non-illuminated push button)
Color Cap – Polycarbonate (illuminated push button and push-to-test pilot light)
Mushroom Button – Acetal (non-illuminated push button)
Polycarbonate (illuminated push button)
Liner – Polypropylene (non-illuminated push button)

Selector Switch (9001SKS)

Base – Thermoplastic Polyester
Seal – Nitrile
Gasket – Nitrile
Seal Keeper – 302 Stainless Steel
Spring – 302 Stainless Steel
Cam Follower – Delrin 100
Bearing Washer – Polyester Film
Cam Carrier – Trogamid
Cam Profile – Delrin 100
Liner – Polypropylene (non-illuminated only)
Knob – Polycarbonate
Trim Washer – Polypropylene
Locking Thrust Washer – Thermoplastic Polyester
Spring Support – CRS

Pilot Light (9001SKP)

Gasket – Nitrile
Base – Thermoplastic Polyester
Trim Washer – Polypropylene
Locking Thrust Washer – Thermoplastic Polyester
Ring Nut – Thermoplastic Polyester
Color Cap – Polycarbonate

Contact Block And Light Module Materials:

Contact Block (9001KA)

Housing – Amorphous Nylon
Contact Slider – Phenolic, Nylon or Acetal
Terminal – Steel
Saddle Clamp – Steel
Spring – Stainless Steel
Contacts – Silver and Copper
Blade – Beryllium Copper
Mounting Screw – Steel
Label – Paper

Light Module (9001KM)

Housing – Thermoplastic Polyester
Socket – Steel
Terminal – Steel with Tin Plate
Saddle Clamp – Steel
Translating Pin – Polycarbonate
Transformer – Thermoplastic Polyester, Steel, Copper, Polyvinyl Chloride, Polytetrafluorethylene, Acetate, Paper
Lamp Spring – Tin Plated Music Wire

Harmony™ 9001K/SK/KX 30 mm push buttons

9001SK – Push buttons and mushroom operators

Note: When ordering, add prefix "9001" to the reference.

Non-Illuminated Momentary Push Button Operators—UL Types 4, 4X, 13/NEMA 4, 4X, 13
For use in hazardous locations, see page 53.
Contact blocks and legend plate not included unless otherwise noted.

Description	Color	Operator with 1 N.O. and 1 N.C. Contact (KA1)	Operator with 1 N.O. Contact (KA2)	Operator with 1 N.C. Contact (KA3)	Operator Only No Contacts *(5)*
9001SKR1B Full Guard	Black	**SKR1BH13**	**SKR1BH5**	**SKR1BH6**	**SKR1B**
	Red	**SKR1RH13**	**SKR1RH5**	**SKR1RH6**	**SKR1R**
	Green	**SKR1GH13**	**SKR1GH5**	**SKR1GH6**	**SKR1G**
	Universal *(1)*	**SKR1UH13**	**SKR1UH5**	**SKR1UH6**	**SKR1U**
	Other *(2)*	**SKR1■H13**	**SKR1■H5**	**SKR1■H6**	**SKR1■**
9001SKR3B No Guard	Black	**SKR3BH13**	**SKR3BH5**	**SKR3BH6**	**SKR3B**
	Red	**SKR3RH13**	**SKR3RH5**	**SKR3RH6**	**SKR3R**
	Green	**SKR3GH13**	**SKR3GH5**	**SKR3GH6**	**SKR3G**
	Universal *(1)*	**SKR3UH13**	**SKR3UH5**	**SKR3UH6**	**SKR3U**
	Other *(2)*	**SKR3■H13**	**SKR3■H5**	**SKR3■H6**	**SKR3■**
9001SKR2B Extended Guard	Black	**SKR2BH13**	**SKR2BH5**	**SKR2BH6**	**SKR2B**
	Red	**SKR2RH13**	**SKR2RH5**	**SKR2RH6**	**SKR2R**
	Green	**SKR2GH13**	**SKR2GH5**	**SKR2GH6**	**SKR2G**
	Universal *(1)*	**SKR2UH13**	**SKR2UH5**	**SKR2UH6**	**SKR2U**
	Other *(2)*	**SKR2■**	**SKR2■H5**	**SKR2■H6**	**SKR2■**
9001SKR4B 1-3/8 in (35 mm) Mushroom Button	**Snap-In Mushroom Button**				
	Black	**SKR4BH13**	**SKR4BH5**	**SKR4BH6**	**SKR4B**
	Red	**SKR4RH13**	**SKR4RH5**	**SKR4RH6**	**SKR4R**
	Red *(3)*	**SKR4R05H13**	**SKR4R05H5**	**SKR4R05H6**	**SKR4R05**
	Green	**SKR4GH13**	**SKR4GH5**	**SKR4GH6**	**SKR4G**
	Other *(4)*	**SKR4★H13**	**SKR4★H5**	**SKR4★H6**	**SKR4★**
	Screw-On Mushroom Button with Set Screw Security				
	Black	**SKR24BH13**	**SKR24BH5**	**SKR24BH6**	**SKR24B**
	Red	**SKR24RH13**	**SKR24RH5**	**SKR24RH6**	**SKR24R**
	Green	**SKR24GH13**	**SKR24GH5**	**SKR24GH6**	**SKR24G**
	Other *(4)*	**SKR24★H13**	**SKR24★H5**	**SKR24★H6**	**SKR24★**
9001SKR5 2-1/4 in (57 mm) Mushroom Button	**Snap-In Mushroom Button**				
	Black	**SKR5BH13**	**SKR5BH5**	**SKR5BH6**	**SKR5B**
	Red	**SKR5RH13**	**SKR5RH5**	**SKR5RH6**	**SKR5R**
	Red *(3)*	**SKR5R05H13**	**SKR5R05H5**	**SKR5R05H6**	**SKR5R05**
	Green	**SKR5GH13**	**SKR5GH5**	**SKR5GH6**	**SKR5G**
	Other *(4)*	**SKR5★H13**	**SKR5★H5**	**SKR5★H6**	**SKR5★**
	Screw-On Mushroom Button with Set Screw Security				
	Black	**SKR25BH13**	**SKR25BH5**	**SKR25BH6**	**SKR25B**
	Red	**SKR25RH13**	**SKR25RH5**	**SKR25RH6**	**SKR25R**
	Green	**SKR25GH13**	**SKR25GH5**	**SKR25GH6**	**SKR25G**
	Other *(4)*	**SKR25★H13**	**SKR25★H5**	**SKR25★H6**	**SKR25★**

Color Codes

Color	■ SKR1, 2, 3 Place Color Code in Reference	★ SKR4, 5, 24, 25 Place Color Code in Reference
Blue	L	L
Yellow	Y	Y
White	W	—
Orange	S	S
Gray	E	—

(1) The universal push button operators contain one each of the following color inserts: black, red, green, yellow, orange, blue and white.
(2) Replace ■ with the color code as chosen from the color code table above.
(3) Knob has the words "Emergency Stop" in raised letters highlighted in white for readability.
(4) Replace ★ with the color code as chosen from the color code table above
(5) These operators can be ordered complete with contact blocks. For maximum block usage, see page 51. Add the "H" number chosen from page 51 to the end of the operator reference number and add the cost of the "H" number to the operator cost.

To select and order Contact Blocks, Light Modules, Knobs, and Accessories, see pages 50 to 59.

Harmony™ 9001K/SK/KX 30 mm push buttons

9001SK – Push buttons and mushroom operators

Note: When ordering, add prefix "9001" to the reference.

Illuminated Push Button Operators—UL Types 4, 4X, 13/NEMA 4, 4X, 13
For use in hazardous locations, see page 53.
Legend plate not included unless otherwise noted.

9001SK1L1

9001SK2L1

9001SK2L1R20

9001SK2L1R21

Description	Voltage and Frequency	Style	With Red Color Cap and 1 N.O. and 1 N.C. Contact (KA1)	With Green Color Cap and 1 N.O.and 1 N.C. Contact (KA1)	With Other Color Cap Without Contact Blocks *(1) (5)*
Full Guard Illuminated Push Button	110–120 V, 50–60 Hz	Transformer	**SK1L1RH13**	**SK1L1GH13**	**SK1L1**
	220–240 V, 50–60 Hz	Transformer	**SK1L7RH13**	**SK1L7GH13**	**SK1L7**
	24–28 Vac/Vdc	Full Voltage	**SK1L35RH13**	**SK1L35GH13**	**SK1L35**
	For other voltages *(2)*	Transformer, Flashing	**SK1L■RH13**	**SK1L■GH13**	**SK1L▼**
		Full Voltage	**SK1L■RH13**	**SK1L■GH13**	**SK1L▼**
		Resistor, Neon *(3)*	**SK1L■RH13**	**SK1L■GH13**	**SK1L▼**
		LED	**SK1L■RH13**	**SK1L■GH13**	**SK1L▼** *(4)*
No Guard Illuminated Push Button	110–120 V, 50–60 Hz	Transformer	**SK2L1RH13**	**SK2L1GH13**	**SK2L1**
	220–240 V, 50–60 Hz	Transformer	**SK2L7RH13**	**SK2L7GH13**	**SK2L7**
	24–28 Vac/Vdc	Full Voltage	**SK2L35RH13**	**SK2L35GH13**	**SK2L35**
	For other voltages *(2)*	Transformer, Flashing	**SK2L■RH13**	**SK2L■GH13**	**SK2L▼**
		Full Voltage	**SK2L■RH13**	**SK2L■GH13**	**SK2L▼**
		Resistor, Neon *(3)*	**SK2L■RH13**	**SK2L■GH13**	**SK2L▼**
		LED	**SK2L■RH13**	**SK2L■GH13**	**SK2L▼** *(4)*
1-3/8 in (35 mm) Illuminated Mushroom	110–120 V, 50–60 Hz	Transformer	**SK2L1R20H13**	**SK2L1G20H13**	**Order SK2L▼** *(4) (6)*
	220–240 V, 50–60 Hz	Transformer	**SK2L7R20H13**	**SK2L7G20H13**	
	24–28 Vac/Vdc	Full Voltage	**SK2L35R20H13**	**SK2L35G20H13**	
	For other voltages *(2)*	Transformer, Flashing	**SK2L■R20H13**	**SK2L■G20H13**	
		Full Voltage	**SK2L■R20H13**	**SK2L■G20H13**	
		Resistor, Neon *(3)*	**SK2L■R20H13**	**SK2L■G20H13**	
		LED	**SK2L■R20H13**	**SK2L■G20H13**	
2-1/4 in (57 mm) Illuminated Mushroom	110–120 V, 50–60 Hz	Transformer	**SK2L1R21H13**	**SK2L1G21H13**	**Order SK2L▼** *(4) (6)*
	220–240 V, 50–60 Hz	Transformer	**SK2L7R21H13**	**SK2L7G21H13**	
	24–28 Vac/Vdc	Full Voltage	**SK2L35R21H13**	**SK2L35G21H13**	
	For other voltages *(2)*	Transformer, Flashing	**SK2L■R21H13**	**SK2L■G21H13**	
		Full Voltage	**SK2L■R21H13**	**SK2L■G21H13**	
		Resistor, Neon *(3)*	**SK2L■R21H13**	**SK2L■G21H13**	
		LED	**SK2L■R21H13**	**SK2L■G21H13**	

(1) These operators can be ordered complete with contact blocks. For maximum block usage, see page 51. Add the "H" number chosen from page 51 to the end of the operator reference number and add the cost of the "H" number to the operator cost.
(2) Replace ■ with the voltage assembly code as chosen from the tables on page 54. EXAMPLE: SK2L■ with 240 Vac/Vdc = SK2L25.
(3) On neon light modules, use clear color caps only.
(4) The cap must be the same color as the LED light module chosen e.g., for red LED, use red color cap.
(5) Replace ▼ with the color code as chosen from the color code table below. EXAMPLE: SK2L35▼ with a blue 1-3/8 in mushroom button = SK2L35L20.
(6) The only difference between a no guard (SK2L) operator and mushroom button operator is the color cap.

Color Caps

Color	Color Codes		
	SK1L/SK2L	**1-3/8 in (35 mm) Mushroom**	**2-1/4 in (57 mm) Mushroom**
Red	R	R20	R21
Green	G	G20	G21
Blue	L	L20	L21
Yellow	Y	Y20	Y21
White	W	W20	W21
Clear	C	C20	C21
Amber	A	A20	A21

To select and order Contact Blocks, Light Modules, Knobs, and Accessories, see pages 50 to 59.

Harmony™ 9001K/SK/KX 30 mm push buttons

9001SK – Multi-function operators

Note: When ordering, add prefix "9001" to the reference.

30 mm Multi-function Operators — UL Types 4, 4X, 13/NEMA 4, 4X, 13

Non-Illuminated Push-pull Screw-on Mushroom Operators

9001SKR9R Non-Illuminated 1-5/8 in Diameter Knob Includes 9001KN179WP Legend Plate Marked Pull To Start / Push To Stop

Description	Color	With 2 N.C. Contacts (1 KA3, 1 KA5)	With 1 N.O. / 1 N.C. Contact (1 KA1)	Without Contacts *(6)*
3-Position				
Momentary Pull-Maintained Neutral-Momentary Push *(2) (7)*	Red	**SKR8RH25**	—	**SKR8R**
	Green	**SKR8GH25**	—	**SKR8G**
	Other	**SKR8■H25**	—	**SKR8■**
2-Position *(1)*				
Maintained Pull-Maintained Push *(2)*	Red	—	**SKR9RH13**	**SKR9R**
	Green	—	**SKR9GH13**	**SKR9G**
	Other	—	**SKR9■H13**	**SKR9■**

Positions for 9001SKR8RH1 or H13

		PULL	CTR	PUSH
(KA1)	KA3	x	O	O
	KA2	O	O	x

Positions for 9001SKR8H25

	PULL	CTR	PUSH
KA3	x	O	O
KA5	x	x	O
KA2	O	O	x

O = contact open; x = contact closed

Non-Illuminated Turn-to-release Mushroom Operators

9001SKR16H2

Description	Color	With 1 N.O. Contact (KA1)	With 2 N.O. / 2 N.C. Contacts (2 KA1)	Without Contacts
2-Position Trigger-Action, Turn-to-Release 1-5/8 in. (40 mm) Non-Removal Plastic Mushroom *Complies with EN418/ISO13850 standards for Emergency Stop push buttons when used with circular Legend Plate 9001KN8330 (90 mm diameter) or 9001KN9330 (60 mm diameter). See page 56.*	Red	**SKR16H13**	**SKR16H2**	**SKR16**

Illuminated Push-pull Mushroom Operators

9001SKR9P1 1-5/8 in Diameter Knob with "Pull To Start / Push To Stop" 9001KN379 Legend Plate

For 1-3/8 in or 2-1/4 in Diameter Knob (1)

Description	Voltage	With Red Knob and 2 N.C. Contacts (1 KA3, 1 KA5)	With Other Color Knob and 2 N.C. Contacts	With Other Color Knob Without Contacts *(6)*
3-Position				
Momentary Pull-Maintained Neutral-Momentary Push *(2) (3) (7)*	110–120 V, 50–60 Hz	**SKR8P1RH25**	**SKR8P1■H25**	**SKR8P1■**
	Other—Transformer, LED, Flashing *(4)*	**SKR8P♦RH25**	**SKR8P♦■H25**	**SKR8P♦■**
	Other—Full Voltage, Resistor, Neon *(5)*	**SKR8P♦RH25**	**SKR8P♦■H25**	**SKR8P♦■**
Description	**Voltage**	**With Red ▲ Knob and 1 N.O. & 1 N.C. Contact (KA1)**	**With Other Color Knob and 1 N.O. & 1 N.C. Contact (KA1)**	**With Other Color Knob Without Contacts**
2-Position				
Maintained Pull-Maintained Push *(2) (3) (7)*	110–120 V, 50–60 Hz	**SKR9P1RH13**	**SKR9P1■H13**	**SKR9P1■**
	Other—Transformer, L.E.D., Flashing *(4)*	**SKR9P♦RH13**	**SKR9P♦■H13**	**SKR9P♦■**
	Other—Full Voltage, Resistor, Neon *(5)*	**SKR9P♦RH13**	**SKR9P♦■H13**	**SKR9P♦■**

(1) To obtain a red knob with "Push Emergency Stop" printed on the red knob—substitute R05 in place of "R".
(2) Replace ■ with the color code as chosen from the color code at right. Example: SKR9■ with a yellow knob = SKR9Y
(3) Replace ♦ with the voltage assembly code as chosen from the tables on page 54. Example: SKR8P♦ with 277 V 50–60 Hz = SKR8P8
(4) The knob must be the same color as the LED light module chosen; e.g., for green LED, use green knob.
(5) On neon light modules, use clear knobs only.
(6) These operators can be ordered complete with contact blocks. For maximum block usage, see page 51. Add the "H" number chosen from page 51 to the end of the operator reference number and add the cost of the "H" number to the operator cost.
(7) For positions, refer to the two tables below.

Color Codes

Color	SKR11, SKR12	SKR8, SKR9
Black *(8)*	B	B
Red	R	R
Green	G	G
Blue	L	L
Yellow	Y	Y
White	W	W
Orange *(8)*	S	S
Clear	—	C
Amber	—	A
Gray	E	—

(8) These colors are not available on illuminated push-pull operators.

To select and order Contact Blocks, Light Modules, Knobs, and Accessories, see pages 50 to 59.

Harmony™ 9001K/SK/KX 30 mm push buttons

9001SK – Selector switches

Note: When ordering, add prefix "9001" to the reference.

2-Position Selector Switches

Contact Block Required					1—Contact Closed		0—Contact Open	
Contact Block Position	**Quantity and Type KA1 or KA2 or KA3**		**Mount on Side KA1 or KA2 or KA3**		↖ **Left**	↗ **Right**	↖ **Left**	↗ **Right**
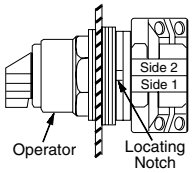	KA1 or KA3		KA1 #2	KA3 #2	1	0	0	1
	KA2			KA2 #2	0	1	1	0
	KA1 or KA3		KA1 #1	KA3 #1	1	0	0	1
	KA2			KA2 #1	0	1	1	0
Cam (see page 47)					**E**		**D**	

Non-Illuminated Operators

Manual Return *(1)*, Operator Only (without contact blocks)	**Reference**	**Reference**
Without Knob	**SKS11**	**SKS12**
With Knob *(3)*	**SKS11♦**	**SKS12♦**
Operator with Contact Blocks and Standard black knob	**Reference**	**Reference**
With 1 KA1 on Side #2	**SKS11BH13**	—
With 1 KA1 on Side #1	**SKS11BH1**	—
With 1 KA1 on Side #1 and 1 KA1 on side #2	**SKS11BH2**	—
Spring Return from Left *(1)*, Operator Only (without contact blocks)	**Reference**	**Reference**
Without Knob	**SKS25**	—
With Knob *(3)*	**SKS25♦**	—
Spring Return from Right *(1)*, Operator Only (without contact blocks)	**Reference**	**Reference**
Without Knob	—	**SKS34**
With Knob *(3)*	—	**SKS34♦**

Illuminated Operators

Manual Return *(1)*, Operator Only (without contact blocks)	**Reference**	**Reference**
Without Knob, 110-120V 50-60 Hz Transformer	**SK11J1**	**SK12J1**
With Standard Red Knob, 110-120V 50-60 Hz Transformer	**SK11J1R**	**SK12J1R**
With Other Color Knob and other voltage Light Module *(2) (3)*	**SK11J■♦**	**SK12J■♦**
Spring Return from Left *(1)*, Operator Only (without contact blocks)	**Reference**	**Reference**
Without Knob, 110-120V 50-60 Hz Transformer	**SK25J1**	—
With Standard Red Knob, 110-120V 50-60 Hz Transformer	**SK25J1R**	—
With Other Color Knob and other voltage Light Module *(2) (3)*	**SK25J■♦**	—
Spring Return from Right *(1)*, Operator Only (without contact blocks)	**Reference**	**Reference**
Without Knob, 110-120V 50-60 Hz Transformer	—	**SK34J1**
With Standard Red Knob, 110-120V 50-60 Hz Transformer	—	**SK34J1R**
With Other Color Knob and other voltage Light Module *(2) (3)*	—	**SK34J■♦**

(1) These operators can be ordered complete with contact blocks. Add the "H code" from page 51 as needed for your application.
(2) Replace ■ with the voltage assembly code as chosen from the tables on page 54. Example: K25J■ with 208Vac = K25J3
(3) Replace ♦ with the color code as chosen from the color code table below. For LED, knob color must match LED.

Selector Switch Assembly Code and Knob Cat. No.

Color	Standard Knob		Gloved Hand Knob	
	♦ Knob Code	Reference	♦ Knob Code	Reference
Black	B	**B11**	FB	**B25**
Red	R	**R8**	FR	**R24**
Green	G	**G8**	FG	**G24**
Yellow	Y	**Y8**	FY	**Y24**
Blue	L	**L8**	FL	**L24**
White	W	**W8**	FW	**W24**
Amber	A	**A8**	FA	**A24**
Clear	C	**C8**	FC	**C24**

To select and order Contact Blocks, Light Modules, Knobs, and Accessories, see pages 50 to 59.

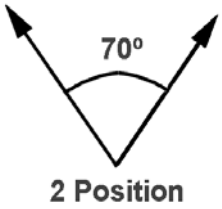

Harmony™ 9001K/SK/KX 30 mm push buttons

9001SK – Selector switches

Note: When ordering, add prefix "9001" to the reference.

3-Position Selector Switches

Contact Block Required — **1 — Contact Closed** **0 — Contact Open**

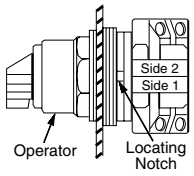

Top View

Contact Block Position	Quantity and Type	Mount on Side	Center	Center	Center	Center	Center	Center	Center	Center	Center
	KA1 or KA3	KA1 or KA3 #2	1 0 0	1 0 0	0 0 1	1 0 0	1 0 0	1 0 0	1 0 0	0 1 0	1 1 0
	KA2	KA2 #2	0 1 1	0 0 1	0 1 0	0 1 0	0 0 1	0 1 1	0 1 1	1 0 0	0 0 1
	KA1 or KA3	KA1 or KA3 #1	0 0 1	1 0 0	0 0 1	1 0 0	0 1 0	0 0 1	1 0 1	0 0 1	0 1 1
	KA2	KA2 #1	1 1 0	0 0 1	0 1 0	0 1 0	0 0 1	1 0 0	0 1 0	0 1 0	1 0 0
Cam (see page 47)			**B**	**C**	**D**	**E**	**F**	**G**	**J**	**L**	**M**

Non-Illuminated Operators

Manual Return, Operator Only (without contact blocks) *(1)*									
Without Knob	**SKS42**	**SKS43**	**SKS44**	**SKS45**	**SKS46**	**SKS47**	**SKS49**	**SKS401**	**SKS402**
With Knob (select style and color from table below)	**SKS42♦**	**SKS43♦**	**SKS44♦**	**SKS45♦**	**SKS46♦**	**SKS47♦**	**SKS49♦**	**SKS401♦**	**SKS402♦**
Operator with Contact Blocks and Standard black knob *(4)*									
With 1 KA1 on Side #2 (H13)	**SKS42BH13**	**SKS43BH13**	**SKS44BH13**	**SKS45BH13**	**SKS46BH13**	**SKS47BH13**	**SKS49BH13**	**SKS401BH13**	**SKS402BH13**
With 1 KA1 on Side #1 (H1)	**SKS42BH1**	**SKS43BH1**	**SKS44BH1**	**SKS45BH1**	**SKS46BH1**	**SKS47BH1**	**SKS49BH1**	**SKS401BH1**	**SKS402BH1**
With 1 KA1 on Side #1 and 1 KA1 on side #2 (H2)	**SKS42BH2**	**SKS43BH2**	**SKS44BH2**	**SKS45BH2**	**SSKS46BH2**	**SKS47BH2**	**SKS49BH2**	**SKS401BH2**	**SKS402BH2**
Spring Return from Left to Center, Operator Only (without contact blocks) *(1)*									
Without Knob	**SKS62**	**SKS63**	**SKS64**	**SKS65**	**SKS66**	**SKS67**	**SKS69**	**SKS601**	**SKS602**
With Knob (select style and color from table below)	**SKS62♦**	**SKS63♦**	**SKS64♦**	**SKS65♦**	**SKS66♦**	**SKS67♦**	**SKS69♦**	**SKS601♦**	**SKS602♦**
Spring Return from Right to Center, Operator Only (without contact blocks) *(1)*									
Without Knob	**SKS72**	**SKS73**	**SKS74**	**SKS75**	**SKS76**	**SKS77**	**SKS79**	**SKS701**	**SKS702**
With Knob (select style and color from table below)	**SKS72♦**	**SKS73♦**	**SKS74♦**	**SKS75♦**	**SKS76♦**	**SKS77♦**	**SKS79♦**	**SKS701♦**	**SKS702♦**
Spring Return from Both Sides to Center, Operator Only (without contact blocks) *(1)*									
Without Knob	**SKS52**	**SKS53**	**SKS54**	**SKS55**	**SKS56**	**SKS57**	**SKS59**	**SKS501**	**SKS502**
With Knob (select style and color from table below)	**SKS52♦**	**SKS53♦**	**SKS54♦**	**SKS55♦**	**SKS56♦**	**SKS57♦**	**SKS59♦**	**SKS501♦**	**SKS502♦**

Illuminated Operators

Manual Return, Operator Only (without contact blocks) *(1)*									
Without Knob, 110-120V 50-60 Hz Transformer	**SK42J1**	**SK43J1**	**SK44J1**	**SK45J1**	**SK46J1**	**SK47J1**	**SK49J1**	**SK401J1**	**SK402J1**
With Standard Red Knob, 110-120V 50-60 Hz Transformer	**SK42J1R**	**SK43J1R**	**SK44J1R**	**SK45J1R**	**SK46J1R**	**SK47J1R**	**SK49J1R**	**SK401J1R**	**SK402J1R**
With Other Color Knob and other voltage Light Module *(2) (3)*	**SK42J■♦**	**SK43J■♦**	**SK44J■♦**	**SK45J■♦**	**SK46J■♦**	**SK47J■♦**	**SK49J■♦**	**SK401J■♦**	**SK402J■♦**
Spring Return from Left to Center, Operator Only (without contact blocks) *(1)*									
Without Knob, 110-120V 50-60 Hz Transformer	**SK62J1**	**SK63J1**	**SK64J1**	**SK65J1**	**SK66J1**	**SK67J1**	**SK69J1**	**SK601J1**	**SK602J1**
With Standard Red Knob, 110-120V 50-60 Hz Transformer	**SK62J1R**	**SK63J1R**	**SK64J1R**	**SK65J1R**	**SK66J1R**	**SK67J1R**	**SK69J1R**	**SK601J1R**	**SK602J1R**
With Other Color Knob and other voltage Light Module *(2) (3)*	**SK62J■♦**	**SK63J■♦**	**SK64J■♦**	**SK65J■♦**	**SK66J■♦**	**SK67J■♦**	**SK69J■♦**	**SK601J■♦**	**SK602J■♦**
Spring Return from Right to Center, Operator Only (without contact blocks) *(1)*									
Without Knob, 110-120V 50-60 Hz Transformer	**SK72J1**	**SK73J1**	**SK74J1**	**SK75J1**	**SK76J1**	**SK77J1**	**SK79J1**	**SK701J1**	**SK702J1**
With Standard Red Knob, 110-120V 50-60 Hz Transformer	**SK72J1R**	**SK73J1R**	**SK74J1R**	**SK75J1R**	**SK76J1R**	**SK77J1R**	**SK79J1R**	**SK701J1R**	**SK702J1R**
With Other Color Knob and other voltage Light Module *(2) (3)*	**SK72J■♦**	**SK73J■♦**	**SK74J■♦**	**SK75J■♦**	**SK76J■♦**	**SK77J■♦**	**SK79J■♦**	**SK701J■♦**	**SK702J■♦**
Spring Return from Both Sides to Center, Operator Only (without contact blocks) *(1)*									
Without Knob, 110-120V 50-60 Hz Transformer	**SK52J1**	**SK53J1**	**SK54J1**	**SK55J1**	**SK56J1**	**SK57J1**	**SK59J1**	**SK501J1**	**SK502J1**
With Standard Red Knob, 110-120V 50-60 Hz Transformer	**SK52J1R**	**SK53J1R**	**SK54J1R**	**SK55J1R**	**SK56J1R**	**SK57J1R**	**SK59J1R**	**SK501J1R**	**SK502J1R**
With Other Color Knob and other voltage Light Module *(2) (3)*	**SK52J■♦**	**SK53J■♦**	**SK54J■♦**	**SK55J■♦**	**SK56J■♦**	**SK57J■♦**	**SK59J■♦**	**SK501J■♦**	**SK502J■♦**

▲ *These operators can be ordered complete with contact blocks. Add the "H code" from page 51 as needed for your application.*
■ *Replace ■ with the voltage assembly code as chosen from the tables on page 54. Example: K25J■ with 208Vac = K25J3.*
♦ *Replace ♦ with the color code as chosen from the color code table below. For LED, knob color must match LED.*
★ *For other color knobs replace the B with knob color code from table below.*

Selector Switch Assembly Code and Knob Cat. No.

Color	Standard Knob ♦ Knob Code	Reference	Gloved Hand Knob ♦ Knob Code	Reference
Black	B	**B11**	FB	**B25**
Red	R	**R8**	FR	**R24**
Green	G	**G8**	FG	**G24**
Yellow	Y	**Y8**	FY	**Y24**
Blue	L	**L8**	FL	**L24**
White	W	**W8**	FW	**W24**
Amber	A	**A8**	FA	**A24**
Clear	C	**C8**	FC	**C24**

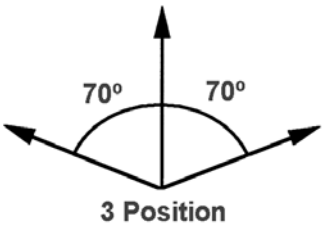

To select and order Contact Blocks, Light Modules, Knobs, and Accessories, see pages 50 to 59.

Harmony™ 9001K/SK/KX 30 mm push buttons

9001SK – Selector switches

Note: When ordering, add prefix "9001" to the reference.

4-Position Selector Switches

Contact Block Required and Position	Quantity and Type			Mount on Side			1 — Contact Closed 0 — Contact Open			
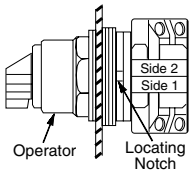	KA1	or	KA3	KA1 #2	or	KA3 #2	1	0	0	0
			KA2			KA2 #2	0	0	1	0
	KA1	or	KA3	KA1 #1	or	KA3 #1	0	0	0	1
			KA2			KA2 #1	0	1	0	0
Cam (see page 47)							**H**			

Top View

Non-Illuminated Operators

Manual Return *(1)*, Operator Only (without contact blocks)	Reference
Without Knob	**SKS88**
With Knob *(3)*	**SKS88♦**

Illuminated Operators

Manual Return *(1)*, Operator Only (without contact blocks)	Reference
Without Knob, 110-120V 50-60 Hz Transformer	**SK88J1**
With Standard Red Knob, 110-120V 50-60 Hz Transformer	**SK88J1R**
With Other Color Knob and other voltage Light Module *(2) (3)*	**SK88J■♦**

(1) These operators can be ordered complete with contact blocks. Add the "H code" from page 51 as needed for your application.
(2) Replace ■ with the voltage assembly code as chosen from the tables on page 54. Example: K25J■ with 208Vac = K25J3
(3) Replace ♦ with the color code as chosen from the color code table below. For LED, knob color must match LED.

Selector Switch Assembly Code and Knob Cat. No.

Color	Standard Knob		Gloved Hand Knob	
	♦ Knob Code	Reference	♦ Knob Code	Reference
Black	B	**B11**	FB	**B25**
Red	R	**R8**	FR	**R24**
Green	G	**G8**	FG	**G24**
Yellow	Y	**Y8**	FY	**Y24**
Blue	L	**L8**	FL	**L24**
White	W	**W8**	FW	**W24**
Amber	A	**A8**	FA	**A24**
Clear	C	**C8**	FC	**C24**

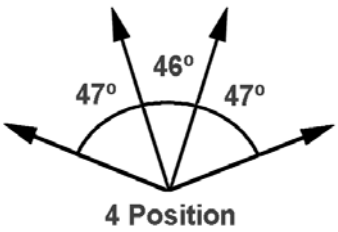

Potentiometer with Dial Plate (not UL listed)—Maximum Voltage 300 Vac

Power	Description	Ratings	Reference
2 W	Operator Only, for Single Potentiometer	NEMA 4, 13	**SK20**
	Operator with Single Potentiometer		**SK21**
	Operator Only, for Tandem Potentiometer		**SK22**
	Operator with Tandem Potentiometer		**SK23**

Potentiometer Suffixes

Single Potentiometer

Suffix *(4)*	Resistance	Suffix *(4)*	Resistance
01	50 Ω	07	5 kΩ
02	100 Ω	08	10 kΩ
04	500 Ω	09	25 kΩ
05	1 kΩ	13	500 kΩ
39	2 kΩ	37	750 kΩ
06	2.5 kΩ	14	1 MΩ

Tandem Potentiometer

Suffix *(4)*	Resistance Front	Rear
82	1 kΩ	1 kΩ

(4) For the complete reference, add the suffix from Suffix column to the reference from Reference column in "Potentiometer with Dial Plate" table above. Example: 9001 SK21 05.
Note: Any potentiometer with a shaft 7/8" long and 1/4" diameter may be used with these operators
Note: To select and order Contact Blocks, Light Modules, Knobs, and Accessories, see pages 50 to 59.

Harmony™ 9001K/SK/KX 30 mm push buttons

9001SK – Selector switch guide

Note: When ordering, add prefix "9001" to the reference.

Shown below is a simplified method of selecting a selector switch to meet almost any combination of contact sequences.

Step No. 1

Determine the contact sequence(s) required. Set up a target table like the one shown for the example below.

Contact Sequence 0—contact open 1—contact closed	↖	↑	↗
A	1	0	0
B	0	1	0
C	0	0	1

Step No. 2

Look for a cam type common to all sequences in the three tables to the right. For the example above, the "3-Position Selector Switch" table would be used. For the contact sequences A (1 0 0), B (0 1 0) and C (0 0 1) of the example above, cam types F and L are common to all three sequences.

Step No. 3

Next, use the cam type common to all the sequences (if several cam types are common, choose one) to find the operator reference number. Go to the proper page number as indicated in the table below:

Number of Positions	Push Button Line	Page Number
2	9001SKS	44
3	9001SKS	45
4	9001SKS	46

If for the example above a manual return operator with a standard black knob is required and:

The F cam type is chosen, the operator reference number is:
- 9001SK—9001SKS46B (from page 45)

The L cam type is chosen, the operator reference number is:
- 9001SK—9001SKS401B (from page 45)

Step No. 4

Determine the contact blocks required by using the same table in Step No. 2.

If, for the example above, the F cam type is chosen:
- Use a 9001KA3 mounted on side no. 2 for sequence A (1 0 0).
- Use a 9001KA3 mounted on side no. 1 for sequence B (0 1 0).
- Use a 9001KA2 mounted on side no. 1 or 2 for sequence C (0 0 1).

If, for the example above, the L cam type is chosen:
- Use a 9001KA2 mounted on side no. 2 for sequence A (1 0 0).
- Use a 9001KA2 mounted on side no. 1 or a 9001KA3 mounted on side no. 2 for sequence B (0 1 0).
- Use a 9001KA3 mounted on side no. 1 for sequence C (0 0 1).

One 9001KA1 double circuit block can be used in place of one 9001KA2 single circuit block plus one 9001KA3 single circuit block mounted on the same side.

2-Position Selector Switch

If you require contact sequence— ↖	↗	Use Cam Type	Use Contact Block Reference	Mount on side no. (See page 51
1	0	E	**KA3**	1 or 2
		D	**KA2**	1 or 2
0	1	E	**KA2**	1 or 2
		D	**KA3**	1 or 2

3-Position Selector Switch

If you require contact sequence— ↖	↑	↗	Use Cam Type									Use Contact Block Reference	Mount on side no. (See page 51)
1	0	0						G			M	**KA2**	1
										L		**KA2**	2
				C		E						**KA3**	1
			B	C		E	F	G	J			**KA3**	2
			B					G	J			**KA5** *(1)*	2
0	1	0			D	E			J	L		**KA2**	1
					D	E						**KA2**	2
							F					**KA3**	1
										L		**KA3**	2
0	0	1		C			F					**KA2**	1 or 2
			B		D			G		L		**KA3**	1
					D							**KA3**	2
			B									**KA5** *(1)*	1
											M	**KA2**	2
1	1	0	B									**KA2**	1
				C			F					**KA5** *(1)*	1 or 2
											M	**KA3**	2
0	1	1	B					G	J			**KA2**	2
								G				**KA5** *(1)*	1
										L		**KA5** *(1)*	2
											M	**KA3**	1
1	0	1							J			**KA3**	1
					D	E			J	L		**KA5** *(1)*	1
					D	E						**KA5** *(1)*	2

4-Position Selector Switch

If you require contact sequence— ↖	↖	↗	↗	Use Cam Type	Use Contact Block Reference	Mount on side no. (See page 51)
1	0	0	0	H	**(A) KA3**	2
0	1	0	0	H	**(B) KA2**	1
0	0	1	0	H	**(C) KA2**	2
0	0	0	1	H	**(D) KA3**	1
1	0	0	1	H	**A & D Wired in Parallel**	
1	1	0	0	H	**A & B Wired in Parallel**	
0	1	1	0	H	**B & C Wired in Parallel**	
0	0	1	1	H	**C & D Wired in Parallel**	
1	1	1	0	H	**A, B & C Wired in Parallel**	
0	1	1	1	H	**B, C & D Wired in Parallel**	
1	0	1	0	H	**A & C Wired in Parallel**	
0	1	0	1	H	**B & D Wired in Parallel**	
1	1	0	1	H	**KA5** *(1)*	2
1	0	1	1	H	**KA5** *(1)*	1

(1) 9001KA5 must be the last block on either side.

When ordering, please specify:

- Quantity
- Class Number
- Type or Reference

For "H" Numbers, see page 51.

Harmony™ 9001K/SK/KX 30 mm push buttons

9001SK – Pilot lights

Note: When ordering, add prefix "9001" to the reference.

Pilot Lights—UL Types 4, 4X, 13/NEMA 4, 4X, 13
For use in hazardous locations, see page 53. Legend plate not included.

Description		Voltage	Style	With Red Fresnel Color Cap	With Green Fresnel Color Cap	With Other Color Cap *(2)*	Without Color Cap
9001SKP1	Standard Pilot Light (Fresnel color cap shown)	110–120 V, 50–60 Hz	Transformer	**SKP1R31**	**SKP1G31**	**SKP1■**	**SKP1**
		220–240 V, 50–60 Hz	Transformer	**SKP7R31**	**SKP7G31**	**SKP7■**	**SKP7**
		24–28 Vac/Vdc	Full Voltage	**SKP35R31**	**SKP35G31**	**SKP35■**	**SKP35**
		For other voltages *(1)*	Transformer, Flashing or LED *(3)*	**SKP▲R31**	**SKP▲G31**	**SKP▲■**	**SKP▲**
			Full Voltage, Neon or Resistor *(4)*	**SKP▲R31**	**SKP▲G31**	**SKP▲■**	**SKP▲**
9001SKT1	Push-To-Test Pilot Light (Fresnel color cap shown)	110–120 V, 50–60 Hz	Transformer	**SKT1R31**	**SKT1G31**	**SKT1■**	**SKT1**
		220–240 V, 50–60 Hz	Transformer	**SKT7R31**	**SKT7G31**	**SKT7■**	**SKT7**
		24–28 Vac/Vdc	Full Voltage	**SKT35R31**	**SKT35G31**	**SKT35■**	**SKT35**
		For other voltages *(1)*	92%	**SKT▲R31**	**SKT▲G31**	**SKT▲■**	**SKT▲**
			Full Voltage, Neon or Resistor *(4)*	**SKT▲R31**	**SKT▲G31**	**SKT▲■**	**SKT▲**
9001SKTR38	Remote Test Pilot Light (Fresnel color cap shown)	120 Vac Only	Resistor	**SKTR38R31**	**SKTR38G31**	**SKTR38■**	**SKTR38**
		24–28 Vac Only	Full Voltage	**SKTR35R31**	**SKTR35G31**	**SKTR35■**	**SKTR35**
		For other voltages *(1)*	Full Voltage or Resistor *(5)*	**SKTR▲R31**	**SKTR▲G31**	**SKTR▲■**	**SKTR▲**

(1) Replace ▲ with the voltage assembly code as chosen from the tables on page 54.
Example: SKT▲R31 with 208 Vac red LED voltage = SKT37LRR31.
(2) Replace ■ with the color code as chosen from the color code table below.
Example: SKP1■ with a blue fresnel cap = SKP1L31.
(3) The cap must be the same color as the LED light module chosen, e.g., for a green LED, use a green color cap.
(4) On neon light modules, use clear color caps only.
(5) Use only full voltage or resistor voltage assembly codes on remote test pilot lights. Do not choose LED, neon or transformer codes. For AC use only.

Color Caps

Color	■ Plastic Fresnel	■ Plastic Domed
Amber	A31	A9
Blue	L31	L9
Clear	C31	C9
Green	G31	G9
Red	R31	R9
White	W31	W9
Yellow	Y31	Y9

Typical Wiring Diagrams

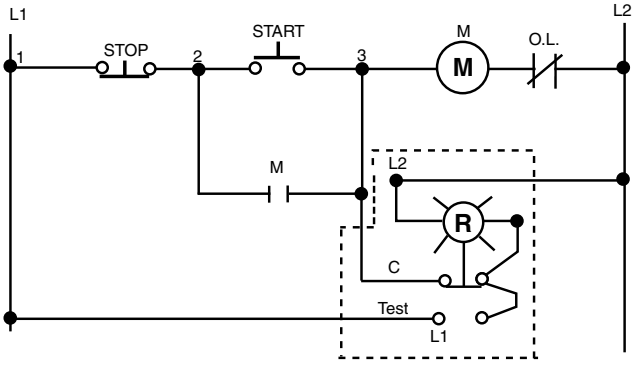

Push-to-test Pilot Light

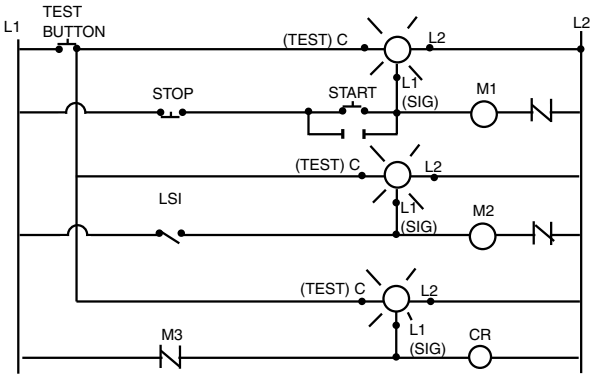

Remote Test Pilot Light

To select and order Contact Blocks, Light Modules, Knobs, and Accessories, see pages 50 to 59.

Harmony™ 9001K/SK/KX 30 mm push buttons

9001SK – Specialty operators

Note: When ordering, add prefix "9001" to the reference.

Specialty Operators—UL Types 4, 4X, 13/NEMA 4, 4X, 13
For use in hazardous locations, see page 53.
Legend plate and contact blocks not included unless otherwise noted.

Interlocked Assembly	Description	Color	Contacts	Without Contacts
9001SKR11U	Interlocked Assembly Both Buttons Maintained	Universal *(1)*	**SKR11UH1**	**SKR11U**
		Other *(2)*	**SKR11■H1**	**SKR11■**
	Interlocked Assembly One Button Momentary	Universal *(1)*	**SKR12UH1H1**	**SKR12U**
	Interlocked Assembly One Button Maintained	Other *(2)*	**SKR12■H1H1**	**SKR12■**

(1) Universal for SKR11,12 includes 2 each of black, red, green, yellow, orange, blue, white.
(2) Replace ■ with the color code as chosen from the following: B = black, R = red, G = green, L = blue, Y = yellow, W = white, S = orange, E = gray. Example: An SKR11 with top button gray and bottom button orange = SKR11ES

Harmony™ 9001K/SK/KX 30 mm push buttons

9001SK – Contact blocks

Note: When ordering, add prefix "9001" to the reference.

The 9001KA contact blocks are Fingersafe™ contact blocks (meeting VDE 0106 Part 100 Standard). They have one screw mounting and captive (backed out) plus/minus terminal screws. These contact blocks are double-break, direct-acting contacts. Because of the wiping action of these contacts, they are suitable for use with programmable controllers. All contact blocks listed below accept up to 2 #12–#24 AWG solid or stranded wires. Recommended tightening torque for screw terminals is 7 lb-in.

Standard Contact Blocks

Description	Symbol	Reference
(Clear Cover)	Direct-Acting	KA1
(Green Cover)		KA2
(Red Cover)	Direct-Acting	KA3
(Clear Cover)	N.O. Contact Early Closing	KA4
(Red Cover)	N.C. Contact Late Opening	KA5
(Green Cover)	N.O. Contact Early Closing	KA6

Additional Circuit Arrangements

Sequencing *(1)* N.O. Contact of KA4 closes before N.O. Contact on KA1	KA4	KA1	Order One9001KA4 and One 9001KA1
Overlapping *(1)* N.O. Contact of KA4 closes before N.C. Contact of KA5 opens	KA4	KA5	Order One9001KA4 and One 9001KA5

(1) For push buttons or two-position selector switches only. For sequencing or overlapping contacts on other operators, refer to catalog 9001CT0001.

Symbol	Contact Blocks with Binder Head Screws (not Fingersafe) Reference	Quantity *(2)*	Gold Flashed Contacts with Standard Pressure Wire Terminals Reference
	KA21	25–Up	KA31
	KA22	25–Up	KA32
	KA23	25–Up	KA33
N.O. Early Closing	KA24	25–Up	KA34
N.C. Contact Late Opening	KA25	25–Up	KA35

(2) Minimum order quantity is 25.

Contact blocks listed below are not Fingersafe, but provide:

- Terminals that accept ring tongue/fork tongue connectors
- Short single circuit contact blocks (0.75" deep vs. 0.97" deep on the Fingersafe)
- For assembled operators, use form Y238 (add to reference as suffix, for example: 9001KRU1H13Y238)

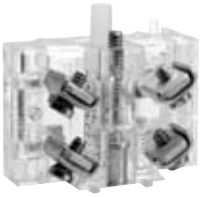

Contact blocks (not Fingersafe)

Symbol	Reference	Symbol	Reference
	KA1G	N.O. Contact Early Closing	KA4G
	KA2G	N.C. Contact Late Opening	KA5G
	KA3G	N.O. Contact Early Closing	KA6G

Contact blocks with Quick-Connect terminals (not Fingersafe)

Symbol	Reference
	KA12
	KA13

For dimensions, refer to catalog 9001CT0001

Maximum Current Ratings for Control Circuit Contacts—9001KA1–KA6, KA21–KA25, KA31–KA35, KA1G–KA6G

V	AC Inductive (NEMA / UL Type A600) 35% Power Factor Make Amperes	Make VA	Break Amperes	Break VA	Continuous Carrying Amperes	Resistive 75% Power Factor Make, Break and Continuous Amperes	V	DC Inductive and Resistive (NEMA Q600) Make and Break KA1	KA2 KA3	KA4	KA5 KA6	Continuous Carrying Amperes
120	60	7200	6.0	720	10	10	125	0.55	0.55	—	—	2.5
240	30		3.0				250	0.27	0.27	—	—	
480	15		1.5				600	0.10	0.10	—	—	
600	12		1.2									

To select and order Contact Blocks, Light Modules, Knobs, and Accessories, see pages 50 to 59.

Harmony™ 9001K/SK/KX 30 mm push buttons

9001SK – Contact blocks

Note: When ordering, add prefix "9001" to the reference.

Contact Block "H" Codes

The design of the 9001KA contact blocks allows them to be mounted side by side and/or in tandem. This enables you to specify an operator and a particular arrangement of contact blocks (shipped completely assembled) with a single reference number. See page 50 for a description of contact blocks.

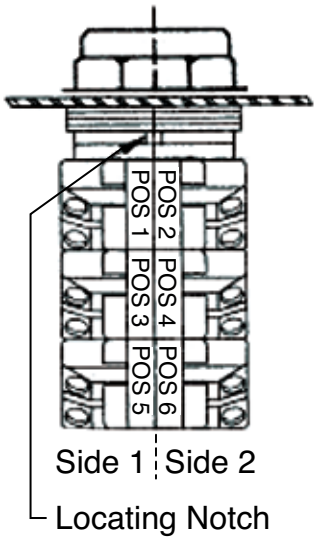

Example: *A 9001KR1B push button with 2 9001KA1 contact blocks would be 9001KR1BH2.*

Suffix No. (Add to Operator Reference)	Positions 1	2	3	4	5	6
H1	KA1					
H2	KA1	KA1				
H3	KA1	KA1	KA1			
H4	KA1	KA1	KA1	KA1		
H5	KA2					
H6	KA3					
H7	KA2	KA2				
H8	KA3	KA3				
H9	KA4	KA1				
H10	KA4	KA5				
H11	KA1	KA1		KA1		
H12	KA2	KA3	KA2	KA3		
H13		KA1				
H14		KA3				
H15	KA2	KA3	KA2			
H16	KA2	KA3		KA3		
H17	KA1	KA1	KA2			
H18	KA3	KA1	KA3		KA3	
H19	KA1	KA1	KA1	KA1	KA1	
H21	KA2	KA3				
H23	KA1	KA1	KA1	KA1	KA1	KA1
H24	KA1	KA2				
H25	KA5	KA3				

Note: For "H" Codes not shown in this table, contact your local Schneider Electric representative.

Dimensions When Using Contact Blocks

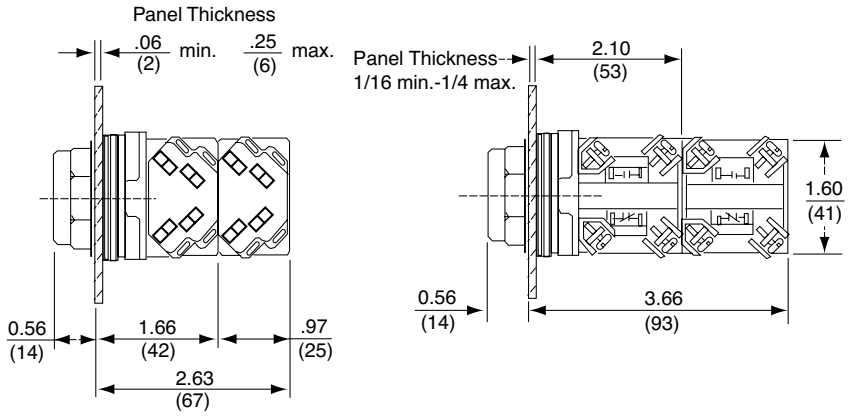

Maximum Contact Block Usage:

2 blocks mounted side by side only: Any 2, 3 or 4-Position spring return selector switch (non-illuminated, illuminated or keyed).

2 blocks mounted in tandem on one side only: Any 2 operator interlocked push button.

2 blocks mounted in tandem (total of four blocks): Any selector push button, keyed push button, 2, 3, or 4-Position maintained selector switch (non-illuminated, illuminated or keyed), push pull operators (non-illuminated or illuminated), joy stick, dual push button.

3 blocks mounted in tandem (total of six blocks): Single momentary push buttons (non-illuminated or illuminated).

Harmony™ 9001K/SK/KX 30 mm push buttons

9001SK – Contact blocks

Note: When ordering, add prefix "9001" to the reference.

Mounting Hole for All 9001SK Control Units

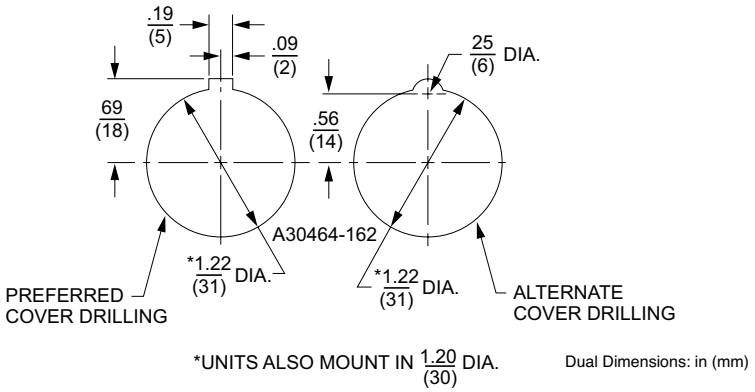

Hole Punch: *Use Greenlee Tool #60242 to punch mounting hole and notch.*

Maximum Contact Block Usage:

- **2 blocks mounted side by side only:** Any 2, 3 or 4-Position **spring return** selector switch (non-illuminated, illuminated or keyed).
- **2 blocks mounted in tandem on one side only:** Any 2 operator interlocked push button.
- **2 blocks mounted in tandem (total of four blocks):** Any selector push button, keyed push button, 2, 3, or 4-Position **maintained** selector switch (non-illuminated, illuminated or keyed), push-pull operators (non-illuminated or illuminated), joy stick, dual push button.
- **3 blocks mounted in tandem (total of six blocks):** Single momentary push buttons (non-illuminated or illuminated).

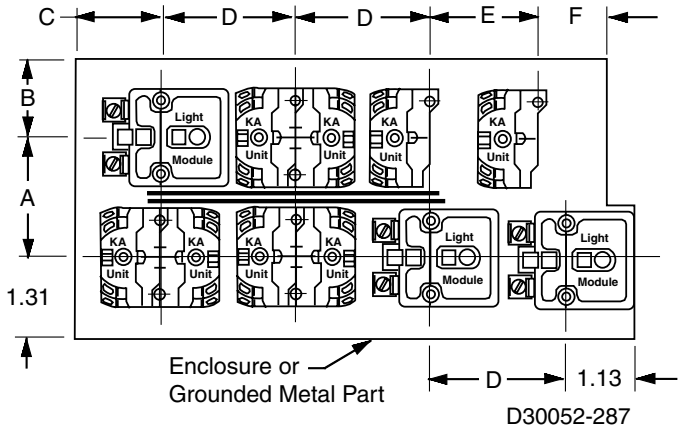

Min. Centerline Spacing, 9001SK Control Units

Legend Plate	Operator	Centerline Spacing (in) A	B	C	D	E	F
Legend Plate Orientation Position #1							
KN2 KN5	Standard Push Button	1.75	1.31	1.44	2.25	1.69	0.88
	1.375 in Dia. Mushroom	1.75	1.31	1.44	2.25	1.69	0.88
	2.25 in Dia. Mushroom	2.25	1.31	1.44	2.25	2.25	1.12
	Selector Switch Knobs	1.75	1.31	1.44	2.25	1.69	0.88
KN3	Standard Push Button	2.00	1.31	1.44	2.25	1.75	0.88
	1.375 in Dia. Mushroom	2.00	1.31	1.44	2.25	1.75	0.88
	2.25 in Dia. Mushroom	2.25	1.31	1.44	2.25	2.25	1.12
	Selector Switch Knobs	2.00	1.31	1.44	2.25	1.75	0.88
KN4	Standard Push Button	1.94	1.31	1.44	2.25	1.62	0.88
	1.375 in Dia. Mushroom	1.94	1.31	1.44	2.25	1.62	0.88
	2.25 in Dia. Mushroom	2.25	1.31	1.44	2.25	2.25	1.12
	Selector Switch Knobs	1.74	1.31	1.44	2.25	1.62	0.88
KN6	Standard Push Button	2.38	1.62	1.44	2.25	2.25	1.12
	1.375 in Dia. Mushroom	2.38	1.62	1.44	2.25	2.25	1.12
	2.25 in Dia. Mushroom	2.38	1.62	1.44	2.25	2.25	1.12
	Selector Switch Knobs	2.38	1.62	1.44	2.25	2.25	1.12

Legend Plate	Operator	Centerline Spacing (in) A	B	C	D	E	F
Legend Plate Orientation Position #2							
KN2 KN5	Standard Push Button	1.62	1.31	1.44	2.25	1.75	0.88
	1.375 in Dia. Mushroom	1.62	1.31	1.44	2.25	1.75	0.88
	2.25 in Dia. Mushroom	2.25	1.31	1.44	2.25	2.25	1.12
	Selector Switch Knobs	1.62	1.31	1.44	2.25	1.75	0.88
KN3	Standard Push Button	1.75	1.31	1.44	2.25	2.00	0.88
	1.375 in Dia. Mushroom	1.75	1.31	1.44	2.25	2.00	0.88
	2.25 in Dia. Mushroom	2.25	1.31	1.44	2.25	2.25	1.12
	Selector Switch Knobs	1.75	1.31	1.44	2.25	2.00	0.88
KN4	Standard Push Button	1.62	1.31	1.44	2.25	1.94	1.00
	1.375 in Dia. Mushroom	1.62	1.31	1.44	2.25	1.94	1.00
	2.25 in Dia. Mushroom	2.25	1.31	1.44	2.25	2.25	1.12
	Selector Switch Knobs	1.62	1.31	1.44	2.25	1.94	1.00
KN6	Standard Push Button	2.25	1.31	1.62	2.38	2.38	0.88
	1.375 in Dia. Mushroom	2.25	1.31	1.62	2.38	2.38	0.88
	2.25 in Dia. Mushroom	2.25	1.31	1.62	2.38	2.38	1.12
	Selector Switch Knobs	2.25	1.31	1.62	2.38	2.38	0.88

Harmony™ 9001K/SK/KX 30 mm push buttons

9001SK – Contact blocks

Note: When ordering, add prefix "9001" to the reference.

Hazardous locations do not always require the use of explosion-proof equipment like the 9001BR control stations. Selecting the most appropriate device for the location can save you money. For more information on the types of hazardous locations, contact your local electrical inspector.

Schneider Electric Offering According to Class, Division, and Group

For Class	Division	Group(s)	Use
I	1	A	1. Intrinsically Safe System
I	1	B, C, D	1. 9001BR station
			2. Intrinsically Safe System
I	2	A	1. 9001SK control stations with restrictions *(1)*
			2. Intrinsically Safe System
I	2	B, C, D	1. 9001BR station
			2. 9001SK control stations with restrictions *(1)*
			3. Intrinsically Safe System
II	1	E, F, G	1. 9001BR station
			2. Intrinsically Safe System
II	2	E, F	1. 9001BR station
			2. 9001SK control stations with restrictions *(1)*
			3. Intrinsically Safe System
II	2	G	1. 9001BR station
			2. 9001SK control stations with restrictions *(2)*
			3. Intrinsically Safe System
III	1, 2	—	1. 9001BR Station
			2. 9001SK control stations with restrictions *(2)*
			3. Intrinsically Safe System

Any 9001SK operator can be used in an area classified as Class I, Division 2 hazardous locations, if:
- *Only logic (KA40 series) or power (KA50 series) reed contact blocks are used.*
- *All 9001SK illuminated operators are UL approved for use in Class I Division 2 areas.*
- *The operators are mounted in any NEMA 4 & 13 enclosures.*

(1) Any 9001SK operator mounted in a 9001KY, 9001KYSS, 9001KYAF or 9001SKY enclosure may be used, except potentiometer operators.
(2) Add Form Y243 to single lamp Push-To-Test pilot lights.

Note: For (1) and (2): UL Listed: File E10054(N), CCN NOIV.

Hazardous Locations:

File E10054(N) CCN NOIV — File LR26817 Class 3218 02

Hermetically Sealed Logic Reed Contact Blocks Suitable for use on low energy level circuits

Description	Symbol	Reference
		KA41
		KA42
		KA43
		KA44
		KA45

Max. Vac/Vdc	Maximum Load Resistive	Inductive	Continuous
32/30	.25 A	.10 A	.5 A
120/100	8 VA	3 VA	.5 A

The maximum number of logic and/or power reed contact blocks per operator is as indicated on individual selection tables for standard contact blocks, **except**:
- On 3-Position selector switches with cams C, D, E, F, G, L, or M, mount reed blocks on **one side only** (either side), maximum 2 in tandem.
- On 4-Position selector switches, mount reed blocks on **one side only** (either side), maximum 2 in tandem.
- On joysticks or on 9001SKR8 push-pull operators, mount reed blocks on **one side only** (either side), maximum 2 in tandem.

Hermetically Sealed Power Reed Contact Blocks *(5)*

Description	Symbol	Reference
		KA51
		KA52
		KA53
		KA54
		KA55

Volts	AC NEMA C300 *(3)* Make A	Make VA	Break A	Break VA	Continuous Carrying Amperes
120	10.00	1200	1.000	120	3.0
240	5.00		.500		

Volts	DC NEMA Q150 *(4)* Make A	Make VA	Break A	Break VA	Continuous Carrying Amperes
115	.50	58	.50	58	3.0

Note: All contact blocks listed above accept #12–18 solid or stranded wire.
The power reed contact blocks can be used with standard industrial relays and starters through NEMA Size 4. Minimum voltage is 5 V and the minimum current is 1 mA.

(3) Inductive Rating—35% Power Factor.
(4) Inductive and Resistive Ratings
(5) Not for use in pendant stations.

Product range: page 36 | Specifications: page 38 | Dimensions: page 60 | Mounting: page 61

Harmony™ 9001K/SK/KX 30 mm push buttons

9001SK – Light modules

Note: When ordering, add prefix "9001" to the reference.

Standard Light Modules for 9001SK Control Units *(1)*

Voltage	Description	Light Module Reference	Voltage Assembly Code	Rating	Replacement Lamp Reference
All	Full Voltage (without Bayonet Base Lamp)	**KM40**	40	—	**no lamp included**
6 Vac/Vdc	Full Voltage	**KM31**	31	.9 VA	**2550101020**
6 Vac/Vdc	LED Red	**KM31LR**	31LR		**6508805201**
6 Vac/Vdc	LED Green	**KM31LG**	31LG		**6508805203**
6 Vac/Vdc	LED Yellow	**KM31LY**	31LY		**6508805202**
12–14 Vac/Vdc	Full Voltage	**KM32**	32	1.2 VA	**2550101037**
12–14 Vac/Vdc	LED Red	**KM32LR**	32LR		**6508805201**
12–14 Vac/Vdc	LED Green	**KM32LG**	32LG		**6508805203**
12–14 Vac/Vdc	LED Yellow	**KM32LY**	32LY		**6508805202**
18 Vac/Vdc	Resistor	**KM33**	33	1.4 VA	**2550101037**
24–28 Vac/Vdc	Full Voltage	**KM35**	35	1.2 VA	**2550101002**
24–28 Vac/Vdc	LED Red	**KM35LR**	35LR	.28 VA	**6508805210**
24–28 Vac/Vdc	LED Green	**KM35LG**	35LG	.28 VA	**6508805212**
24–28 Vac/Vdc	LED Yellow	**KM35LY**	35LY	.28 VA	**6508805211**
24–28 Vac/Vdc	LED White	**KM35LW**	35LW	.28 VA	**6508805214**
24–28 Vac/Vdc	LED Blue	**KM35LL**	35LL	.28 VA	**6508805213**
48 Vac/Vdc	Full Voltage	**KM36**	36	2.6 VA	**2550101025**
110–120 V, 50–60 Hz	LED Red	**KM1LR**	1LR		**6508805201**
110–120 V, 50–60 Hz	LED Green	**KM1LG**	1LG		**6508805203**
110–120 V, 50–60 Hz	LED Yellow	**KM1LY**	1LY		**6508805202**
110–120 V, 50–60 Hz	Transformer	**KM1**	1	2.4 VA	**2550101020**
110–120 V, 50–60 Hz	Flashing	**KMF1**	F1	.85 VA	**2550101036**
120 Vac/Vdc	Resistor	**KM38**	38	3.0 VA	**2550101027**
120 Vac/Vdc	Full Voltage	**KM38**	38	3.0 VA	**2550101027**
120 Vac/Vdc	Neon	**KM11**	11	0.2 VA	**2550101013**
120 Vac/Vdc	LED Red	**KM38LR**	38LR	1.4 VA	**6508805210**
120 Vac/Vdc	LED Green	**KM38LG**	38LG	1.4 VA	**6508805212**
120 Vac/Vdc	LED Yellow	**KM38LY**	38LY	1.4 VA	**6508805211**
120 Vac/Vdc	LED White	**KM38LW**	38LW	1.4 VA	**6508805214**
120 Vac/Vdc	LED Blue	**KM38LL**	38LL	1.4 VA	**6508805213**
208–220 V, 50–60 Hz	Transformer	**KM3**	3	2.5 VA	**2550101020**
208–220 V, 50–60 Hz	LED Red	**KM3LR**	3LR		**6508805201**
208–220 V, 50–60 Hz	LED Green	**KM3LG**	3LG		**6508805203**
208–220 V, 50–60 Hz	LED Yellow	**KM3LY**	3LY		**6508805202**
208–220 V, 50–60 Hz	LED White	**KM3LW**	3LW		**6508805215**
208–220 V, 50–60 Hz	LED Blue	**KM3LL**	3LL		**6508805216**
220–240 V, 50–60 Hz	Transformer	**KM7**	7	2.0 VA	**2550101020**
220–240 V, 50–60 Hz	LED Red	**KM7LR**	7LR		**6508805201**
220–240 V, 50–60 Hz	LED Green	**KM7LG**	7LG		**6508805203**
220–240 V, 50–60 Hz	LED Yellow	**KM7LY**	7LY		**6508805202**
220–240 V, 50–60 Hz	LED White	**KM7LW**	7LW		**6508805215**
220–240 V, 50–60 Hz	LED Blue	**KM7LL**	7LL		**6508805216**
240 Vac/Vdc	Resistor	**KM25**	25	6.0 VA	**2550101027**
240 Vac/Vdc	Neon	**KM12**	12	0.3 VA	**2550101013**
277 V, 50–60 Hz	Transformer	**KM8**	8	2.4 VA	**2550101020**
380–480 V, 50–60 Hz	Transformer	**KM5**	5	2.8 VA	**2550101020**
480 Vac/Vdc	Neon	**KM14**	14	0.5 VA	**2550101013**
550–600 V, 50–60 Hz	Transformer	**KM6**	6	2.5 VA	**2550101020**

(1) For use with all operators except KX and remote test pilot.

Notes: Light modules are available in other voltages, as shown above. For use in hazardous locations, see page 53. With neon type light modules, use a clear color cap only. With LED light modules, use either a clear color cap or a cap the same color as the LED.

Shallow Depth Light Modules For 9001SK Control Units *(2)*

Voltage	Description	Light Module Reference	Voltage Assembly Code	Rating	Replacement Lamp Reference
24–28 Vac/Vdc	Full Voltage	**KM55**	55	1.2 VA	**2550101002**
	LED Red	**KM55LR**	55LR	0.5 VA	**6508805204**
	LED Green	**KM55LG**	55LG		**6508805206**
	LED Yellow	**KM55LY**	55LY		**6508805205**
110–120 Vac/Vdc	Full Voltage	**KM58**	58	3.0 VA	**2550101027**
	LED Red	**KM58LR**	58LR	0.5 VA	**6508805204**
	LED Green	**KM58LG**	58LG		**6508805206**
	LED Yellow	**KM58LY**	58LY		**6508805205**

(2) For use with all operators except KX and remote test pilot.

Notes: For use in hazardous locations, see page 53. Reduces the depth of illuminated push buttons with contact blocks by over 33%. With LED light modules, use a cap that is the same color as the LED.

File CCN E42259 NKCR — File Class LR25490 3211 03 — marked

Product range: page 36 | Specifications: page 38 | Dimensions: page 60 | Mounting: page 61

Harmony™ 9001K/SK/KX 30 mm push buttons

9001SK – Legend plates

Note: When ordering, add prefix "9001" to the reference.

Legend Plates

Standard Markings	Plastic Legend Plates for use with 9001SK Operators									Aluminum Legend Plates for use with 9001K Operators		
	1-3/4" Square			2-1/4" Square			2-1/2" Square			Black Legend	Black Legend	Blue Legend
	Silver Legend w/ Black Letters	White Legend w/ Black Letters	Black Legend w/ White Letters	Silver Legend w/ Black Letters	White Legend w/ Black Letters	Black Legend w/ White Letters	Silver Legend w/ Black Letters	White Legend w/ Black Letters	Black Legend w/ White Letters			
For Push Button or Pilot Light												
Blank	KN200SP	KN200WP	KN200BP	KN100SP	KN100WP	KN100BP	KN700SP	KN700WP	KN700BP	KN200	KN300	KN800
Blank (red)	KN200RP *(2)*	KN200RP *(2)*	KN200RP *(2)*	KN100RP *(2)*	KN100RP *(2)*	KN100RP *(2)*	KN700RP *(2)*	KN700RP *(2)*	KN700RP *(2)*	KN200R *(1)*	KN300R *(1)*	KN800R *(1)*
Start	KN201SP	KN201WP	KN201BP	KN101SP	KN101WP	KN101BP	KN701SP	KN701WP	KN701BP	KN201	KN301	KN801
Stop	KN202RP *(2)*	KN202RP *(2)*	KN202RP *(2)*	KN102RP *(2)*	KN102RP *(2)*	KN102RP *(2)*	KN702RP *(2)*	KN702RP *(2)*	KN702RP *(2)*	KN202 *(1)*	KN302 *(1)*	KN802 *(1)*
On	KN203SP	KN203WP	KN203BP	KN103SP	KN103WP	KN103BP	KN703SP	KN703WP	KN703BP	KN203	KN303	KN803
Off	KN204RP *(2)*	KN204RP *(2)*	KN204RP *(2)*	KN104RP *(2)*	KN104RP *(2)*	KN104RP *(2)*	KN704RP *(2)*	KN704RP *(2)*	KN704RP *(2)*	KN204 *(1)*	KN304 *(1)*	KN804 *(1)*
Emerg. Stop	KN205RP *(2)*	KN205RP *(2)*	KN205RP *(2)*	KN105RP *(2)*	KN105RP *(2)*	KN105RP *(2)*	KN705RP *(2)*	KN705RP *(2)*	KN705RP *(2)*	KN205 *(1)*	KN305 *(1)*	KN805 *(1)*
Forward	KN206SP	KN206WP	KN206BP	KN106SP	KN106WP	KN106BP	KN706SP	KN706WP	KN706BP	KN206	KN306	KN806
Reverse	KN207SP	KN207WP	KN207BP	KN107SP	KN107WP	KN107BP	KN707SP	KN707WP	KN707BP	KN207	KN307	KN807
Close	KN208SP	KN208WP	KN208BP	KN108SP	KN108WP	KN108BP	KN708SP	KN708WP	KN708BP	KN208	KN308	KN808
Open	KN209SP	KN209WP	KN209BP	KN109SP	KN109WP	KN109BP	KN709SP	KN709WP	KN709BP	KN209	KN309	KN809
Down	KN210SP	KN210WP	KN210BP	KN110SP	KN110WP	KN110BP	KN710SP	KN710WP	KN710BP	KN210	KN310	KN810
Up	KN211SP	KN211WP	KN211BP	KN111SP	KN111WP	KN111BP	KN711SP	KN711WP	KN711BP	KN211	KN311	KN811
Fast	KN212SP	KN212WP	KN212BP	KN112SP	KN112WP	KN112BP	KN712SP	KN712WP	KN712BP	KN212	KN312	KN812
Slow	KN213SP	KN213WP	KN213BP	KN113SP	KN113WP	KN113BP	KN713SP	KN713WP	KN713BP	KN213	KN313	KN813
High	KN214SP	KN214WP	KN214BP	KN114SP	KN114WP	KN114BP	KN714SP	KN714WP	KN714BP	KN214	KN314	KN814
Low	KN215SP	KN215WP	KN215BP	KN115SP	KN115WP	KN115BP	KN715SP	KN715WP	KN715BP	KN215	KN315	KN815
Inch	KN216SP	KN216WP	KN216BP	KN116SP	KN116WP	KN116BP	KN716SP	KN716WP	KN716BP	KN216	KN316	KN816
In	KN217SP	KN217WP	KN217BP	KN117SP	KN117WP	KN117BP	KN717SP	KN717WP	KN717BP	KN217	KN317	KN817
Jog	KN218SP	KN218WP	KN218BP	KN118SP	KN118WP	KN118BP	KN718SP	KN718WP	KN718BP	KN218	KN318	KN818
Jog For.	KN219SP	KN219WP	KN219BP	KN119SP	KN119WP	KN119BP	KN719SP	KN719WP	KN719BP	KN219	KN319	KN819
Jog Rev.	KN220SP	KN220WP	KN220BP	KN120SP	KN120WP	KN120BP	KN720SP	KN720WP	KN720BP	KN220	KN320	KN820
Lower	KN221SP	KN221WP	KN221BP	KN121SP	KN121WP	KN121BP	KN721SP	KN721WP	KN721BP	KN221	KN321	KN821
Out	KN222SP	KN222WP	KN222BP	KN122SP	KN122WP	KN122BP	KN722SP	KN722WP	KN722BP	KN222	KN322	KN822
Reset	KN223SP	KN223WP	KN223BP	KN123SP	KN123WP	KN123BP	KN723SP	KN723WP	KN723BP	KN223	KN323	KN823
Run	KN224SP	KN224WP	KN224BP	KN124SP	KN124WP	KN124BP	KN724SP	KN724WP	KN724BP	KN224	KN324	KN824
Start Jog	KN225SP	KN225WP	KN225BP	KN125SP	KN125WP	KN125BP	KN725SP	KN725WP	KN725BP	KN225	KN325	KN825
Test	KN226SP	KN226WP	KN226BP	KN126SP	KN126WP	KN126BP	KN726SP	KN726WP	KN726BP	KN226	KN326	KN826
Raise	KN227SP	KN227WP	KN227BP	KN127SP	KN127WP	KN127BP	KN727SP	KN727WP	KN727BP	KN227	KN327	KN827
Decrease	KN228SP	KN228WP	KN228BP	KN128SP	KN128WP	KN128BP	KN728SP	KN728WP	KN728BP	KN228	KN328	KN828
Increase	KN229SP	KN229WP	KN229BP	KN129SP	KN129WP	KN129BP	KN729SP	KN729WP	KN729BP	KN229	KN329	KN829
Left	KN230SP	KN230WP	KN230BP	KN130SP	KN130WP	KN130BP	KN730SP	KN730WP	KN730BP	KN230	KN330	KN830
Right	KN231SP	KN231WP	KN231BP	KN131SP	KN131WP	KN131BP	KN731SP	KN731WP	KN731BP	KN231	KN331	KN831
Cycle Start	KN232SP	KN232WP	KN232BP	KN132SP	KN132WP	KN132BP	KN732SP	KN732WP	KN732BP	KN232	KN332	KN832
Feed Start	KN233SP	KN233WP	KN233BP	KN133SP	KN133WP	KN133BP	KN733SP	KN733WP	KN733BP	KN233	KN333	KN833
Cycle Stop	KN234SP	KN234WP	KN234BP	KN134SP	KN134WP	KN134BP	KN734SP	KN734WP	KN734BP	KN234	KN334	KN834
Motor Run	KN236SP	KN236WP	KN236BP	KN136SP	KN136WP	KN136BP	KN736SP	KN736WP	KN736BP	KN236	KN336	KN836
Motor Stop	KN237SP	KN237WP	KN237BP	KN137SP	KN137WP	KN137BP	KN737SP	KN737WP	KN737BP	KN237	KN337	KN837
Power On	KN238SP	KN238WP	KN238BP	KN138SP	KN138WP	KN138BP	KN738SP	KN738WP	KN738BP	KN238	KN338	KN838
Pull To Start Push To Stop	N/A	N/A	N/A	KN179SP	KN179WP	KN179BP	KN779SP	KN779WP	KN779BP	N/A	KN379	N/A
For Selector Switch or Selector Push Button												
For.-Rev.	KN239SP	KN239WP	KN239BP	KN139SP	KN139WP	KN139BP	KN739SP	KN739WP	KN739BP	KN239	KN339	KN839
Hand-Auto.	KN240SP	KN240WP	KN240BP	KN140SP	KN140WP	KN140BP	KN740SP	KN740WP	KN740BP	KN240	KN340	KN840
High-Low	KN241SP	KN241WP	KN241BP	KN141SP	KN141WP	KN141BP	KN741SP	KN741WP	KN741BP	KN241	KN341	KN841
Jog-Run	KN242SP	KN242WP	KN242BP	KN142SP	KN142WP	KN142BP	KN742SP	KN742WP	KN742BP	KN242	KN342	KN842
Man.-Auto.	KN243SP	KN243WP	KN243BP	KN143SP	KN143WP	KN143BP	KN743SP	KN743WP	KN743BP	KN243	KN343	KN843
Off-On	KN244SP	KN244WP	KN244BP	KN144SP	KN144WP	KN144BP	KN744SP	KN744WP	KN744BP	KN244	KN344	KN844
On-Off	KN245SP	KN245WP	KN245BP	KN145SP	KN145WP	KN145BP	KN745SP	KN745WP	KN745BP	KN245	KN345	KN845
Open-Close	KN246SP	KN246WP	KN246BP	KN146SP	KN146WP	KN146BP	KN746SP	KN746WP	KN746BP	KN246	KN346	KN846
Raise-Lower	KN247SP	KN247WP	KN247BP	KN147SP	KN147WP	KN147BP	KN747SP	KN747WP	KN747BP	KN247	KN347	KN847
Run-Jog	KN248SP	KN248WP	KN248BP	KN148SP	KN148WP	KN148BP	KN748SP	KN748WP	KN748BP	KN248	KN348	KN848
Slow-Fast	KN250SP	KN250WP	KN250BP	KN150SP	KN150WP	KN150BP	KN750SP	KN750WP	KN750BP	KN250	KN350	KN850
Start-Stop	KN251SP	KN251WP	KN251BP	KN151SP	KN151WP	KN151BP	KN751SP	KN751WP	KN751BP	KN251	KN351	KN851
Up-Down	KN253SP	KN253WP	KN253BP	KN153SP	KN153WP	KN153BP	KN753SP	KN753WP	KN753BP	KN253	KN353	KN853
Low-High	KN254SP	KN254WP	KN254BP	KN154SP	KN154WP	KN154BP	KN754SP	KN754WP	KN754BP	KN254	KN354	KN854
Stop-Start	KN255SP	KN255WP	KN255BP	KN155SP	KN155WP	KN155BP	KN755SP	KN755WP	KN755BP	KN255	KN355	KN855
Left-Right	KN256SP	KN256WP	KN256BP	KN156SP	KN156WP	KN156BP	KN756SP	KN756WP	KN756BP	KN256	KN356	KN856
On-Auto	KN276SP	KN276WP	KN276BP	KN176SP	KN176WP	KN176BP	KN776SP	KN776WP	KN776BP	KN276	KN376	KN876
Auto-Off-Hand	KN258SP	KN258WP	KN258BP	KN158SP	KN158WP	KN158BP	KN758SP	KN758WP	KN758BP	KN258	KN358	KN858
For.-Off-Rev.	KN259SP	KN259WP	KN259BP	KN159SP	KN159WP	KN159BP	KN759SP	KN759WP	KN759BP	KN259	KN359	KN859
Hand-Off-Auto.	KN260SP	KN260WP	KN260BP	KN160SP	KN160WP	KN160BP	KN760SP	KN760WP	KN760BP	KN260	KN360	KN860
Man.-Off-Auto.	KN262SP	KN262WP	KN262BP	KN162SP	KN162WP	KN162BP	KN762SP	KN762WP	KN762BP	KN262	KN362	KN862
Open-Off-Close	KN263SP	KN263WP	KN263BP	KN163SP	KN163WP	KN163BP	KN763SP	KN763WP	KN763BP	KN263	KN363	KN863
Up-Off-Down	KN264SP	KN264WP	KN264BP	KN164SP	KN164WP	KN164BP	KN764SP	KN764WP	KN764BP	KN264	KN364	KN864
Low-Off-High	KN265SP	KN265WP	KN265BP	KN165SP	KN165WP	KN165BP	KN765SP	KN765WP	KN765BP	KN265	KN365	KN865
Jog-Stop-Run	KN267SP	KN267WP	KN267BP	KN167SP	KN167WP	KN167BP	KN767SP	KN767WP	KN767BP	KN267	KN367	KN867
High-Low-Off	KN270SP	KN270WP	KN270BP	KN170SP	KN170WP	KN170BP	KN770SP	KN770WP	KN770BP	KN270	KN370	KN870
High-Off-Low	KN277SP	KN277WP	KN277BP	KN177SP	KN177WP	KN177BP	KN777SP	KN777WP	KN777BP	KN277	KN377	KN877
Auto-Man.-Off	KN278SP	KN278WP	KN278BP	KN178SP	KN178WP	KN178BP	KN778SP	KN778WP	KN778BP	KN278	KN378	KN878

(1) Legend plate has red background with silver letters.
(2) Legend plate has red background with black letters.

Product range: page 36
Specifications: page 38
Dimensions: page 60
Mounting: page 61

Harmony™ 9001K/SK/KX 30 mm push buttons

9001SK – Legend plates

Note: When ordering, add prefix "9001" to the reference.

Legend Plates–Special Marking

Legend Plate	Description		Reference
KN100●P (Plastic) *(1)* 2.25 in Square	Standard Markings		See page 55
	Special Marking *(2)*	Silver Field, Black Letters	KN199SP
		White Field, Black Letters	KN199WP
		Red Field, Black Letters	KN199RP
		Black Field, White Letters	KN199BP
KN200 Aluminum	Standard Markings		See page 55
	Special Marking *(2)*	Black Field	KN299
		Red Field	KN299R
KN200●P (Plastic) *(1)* 1.7 in Square	Standard Markings		See page 55
	Special Marking *(2)*	Silver Field, Black Letters	KN299SP
		White Field, Black Letters	KN299WP
		Red Field, Black Letters	KN299RP
		Black Field, White Letters	KN299BP
KN300 Aluminum	Standard Markings		See page 55
	Special Marking *(2)*	Black Field	KN399
		Red Field	KN399R
KN400 Aluminum	Blank		KN400
	Any Marking *(2)*		KN499
KN500 Aluminum	Standard Markings		See page 55
	Special Marking *(2)*	Black Field	KN599
		Green Red Field	KN519
KN600 Aluminum	Blank	Black Field	KN600
		Red Field	KN600R
	Any Marking *(2)*	Black Field	KN699
		Red Field	KN699R
KN700●P (Plastic) *(1)* 2.5 in Square	Standard Markings		Select from page 55
	Special Marking *(2)*	Silver Field, Black Letters	KN799SP
		White Field, Black Letters	KN799WP
		Red Field, Black Letters	KN799RP
		Black Field, White Letters	KN799BP
KN800 Aluminum	Standard Markings		Select from page 55
	Special Marking *(2)*	Blue Field	KN899
		Red Field	KN899R
KN900 Aluminum	Blank		KN900
	Any Marking *(2)*		KN999

(1) Other colors available (see table below).
(2) Specify marking required.

Plastic Legend Plates—Other Colors

	Plate Color	Letter Color	1.7 in Square	2.25 in Square	2.5 in Square
Blank Legend Plates	Yellow	Black	KN200YP	KN100YP	KN700YP
	Green	White	KN200GP	KN100GP	KN700GP
	Blue		KN200LP	KN100LP	KN700LP
	Red		KN200CP	KN100CP	KN700CP
	Orange		KN200AP	KN100AP	KN700AP
	Burnt Orange	Black	KN200HP	KN100HP	KN700HP
Special Engraved Legend Plates	Yellow	Black	KN299YP	KN199YP	KN799YP
	Green	White	KN299GP	KN199GP	KN799GP
	Blue		KN299LP	KN199LP	KN799LP
	Red		KN299CP	KN199CP	KN799CP
	Orange		KN299AP	KN199AP	KN799AP
	Burnt Orange	Black	KN299HP	KN199HP	KN799HP

Maximum Number of Lines and Characters for 9001KN Legend Plates

Reference	KN100	KN200	KN300	KN400	KN500	KN600	KN700	KN800	KN900
Max. No. of Char. per Line	16	14	18	18	8 per field	22	17	18	18 per pos.
Max. No. of Lines	2	1	3	2	2 per field	4	2	2	1 per pos.

Note: The maximum number of characters and lines is a practical maximum, based on a minimum size of characters to facilitate easy reading.

Circular Legends for Emergency Stop Mushroom Heads (yellow background)

Diameter	Text	Reference
60 mm	—	KN9100
	EMERGENCY STOP	KN9330
90 mm	—	KN8100
	EMERGENCY STOP	KN8330

Legend Plate Position #1

Min. Centerline Spacing, 9001SK Control Units

Legend Plate	Operator	Centerline Spacing (in) A	B	C	D	E	F
Legend Plate Orientation Position #1							
KN2 KN5	Standard Push Button	1.75	1.31	1.44	2.25	1.69	0.88
	1.375 in Dia. Mushroom	1.75	1.31	1.44	2.25	1.69	0.88
	2.25 in Dia. Mushroom	2.25	1.31	1.44	2.25	2.25	1.12
	Selector Switch Knobs	1.75	1.31	1.44	2.25	1.69	0.88
KN3	Standard Push Button	2.00	1.31	1.44	2.25	1.75	0.88
	1.375 in Dia. Mushroom	2.00	1.31	1.44	2.25	1.75	0.88
	2.25 in Dia. Mushroom	2.25	1.31	1.44	2.25	2.25	1.12
	Selector Switch Knobs	2.00	1.31	1.44	2.25	1.75	0.88
KN4	Standard Push Button	1.94	1.31	1.44	2.25	1.62	0.88
	1.375 in Dia. Mushroom	1.94	1.31	1.44	2.25	1.62	0.88
	2.25 in Dia. Mushroom	2.25	1.31	1.44	2.25	2.25	1.12
	Selector Switch Knobs	1.74	1.31	1.44	2.25	1.62	0.88
KN6	Standard Push Button	2.38	1.62	1.44	2.25	2.25	1.12
	1.375 in Dia. Mushroom	2.38	1.62	1.44	2.25	2.25	1.12
	2.25 in Dia. Mushroom	2.38	1.62	1.44	2.25	2.25	1.12
	Selector Switch Knobs	2.38	1.62	1.44	2.25	2.25	1.12

Legend Plate Position #2

Legend Plate Orientation Position #2							
KN2 KN5	Standard Push Button	1.62	1.31	1.44	2.25	1.75	0.88
	1.375 in Dia. Mushroom	1.62	1.31	1.44	2.25	1.75	0.88
	2.25 in Dia. Mushroom	2.25	1.31	1.44	2.25	2.25	1.12
	Selector Switch Knobs	1.62	1.31	1.44	2.25	1.75	0.88
KN3	Standard Push Button	1.75	1.31	1.44	2.25	2.00	0.88
	1.375 in Dia. Mushroom	1.75	1.31	1.44	2.25	2.00	0.88
	2.25 in Dia. Mushroom	2.25	1.31	1.44	2.25	2.25	1.12
	Selector Switch Knobs	1.75	1.31	1.44	2.25	2.00	0.88
KN4	Standard Push Button	1.62	1.31	1.44	2.25	1.94	1.00
	1.375 in Dia. Mushroom	1.62	1.31	1.44	2.25	1.94	1.00
	2.25 in Dia. Mushroom	2.25	1.31	1.44	2.25	2.25	1.12
	Selector Switch Knobs	1.62	1.31	1.44	2.25	1.94	1.00
KN6	Standard Push Button	2.25	1.31	1.62	2.38	2.38	0.88
	1.375 in Dia. Mushroom	2.25	1.31	1.62	2.38	2.38	0.88
	2.25 in Dia. Mushroom	2.25	1.31	1.62	2.38	2.38	1.12
	Selector Switch Knobs	2.25	1.31	1.62	2.38	2.38	0.88

Special Legend Plates

9001KN500
(For Use with Dual Function Operators: KR6, KR7 and KR67)
Standard Markings

Reference	Green	Red
KN500	Blank	Blank
KN501	Start	Stop
KN502	On	Off

Reference	Black	Black
KN520	Blank	Blank
KN521	Start	Stop
KN522	On	Off
KN523	Forward	Reverse
KN524	Up	Down
KN525	High	Low
KN526	Open	Close

Product range: page 36
Specifications: page 38
Dimensions: page 60
Mounting: page 61

Schneider Electric

Harmony™ 9001K/SK/KX 30 mm push buttons

9001SK – Accessories

Note: When ordering, add prefix "9001" to the reference.

Padlock Attachments

	Used On	Description	Reference
	Non-illuminated push button — Standard or mushroom (KR4, KR5 mushroom buttons only).	Holds button in depressed position and can be padlocked.	**K4**
	Non-illuminated push buttons with or without protective boots.	Holds button in depressed position when padlocked.	**K5**
	Non-illuminated push buttons with or without protective boots.	Holds button in depressed position when padlocked.	**K97**
	Non-illuminated push buttons, cover type attachment. KR, SKR	Attachment can be padlocked. Does not hold button in depressed position.	**K6**
	Push buttons, cover type attachment.	Spring loaded cover cannot be padlocked. Does not hold button in depressed position.	**K60**
	Push-pull operator and illuminated push buttons. KR8, KR9	Holds button in depressed position and can be padlocked.	**K62**
	KR11U and KR12U Interlocked Assembly	Holds maintained button in depressed position and can be padlocked.	**K96**
	9001SKR9 Push-pull operators— Non-Illuminated and Illuminated	Holds button in depressed position. Can be padlocked.	**K162**

Mushroom Button Guards

Aluminum Mushroom Guard for 1.375 in Mushroom Button Operator (KR4, KR24)

Yellow Plastic Extended Mushroom Guard for 1.375 in and 1.625 in Mushroom Button Operators

Aluminum Mushroom Guard for 2.25 in Mushroom Button Operator

Reference	Reference	Used On
K48	**K56▲** *(1)*	SKR4
	K56■M *(2)*	SKR8, SKR9

(1) Replace ▲ with B=Black, G=Green, R=Red or Y=Yellow.
(2) Replace ■ with R=Red or Y=Yellow. The mushroom guard has finger holes for push-pull operators.

Padlock Attachments

	Used On	Description	Reference
	Selector switches and potentiometers (will not work with gloved-hand knob).	Cover type attachment that can be padlocked to keep unauthorized personnel from tampering with the operator.	**K7**
	Selector switches and potentiometers (will not work with gloved-hand knob).	Same as 9001K7 but with spring loaded lockout cover.	**K107**
	Illuminated push buttons (with or without guard) and key operated push buttons.	Cover type attachment that can be padlocked to keep unauthorized personnel from tampering with the operator.	**K108**
	Illuminated push buttons (with or without guard) and key operated push buttons.	Same as 9001K108 but with spring loaded lockout cover.	**K109**
	Maintained push-pull operators using 1.375 in dia. mushroom buttons (-20 series as shown on page 58).	Cover type attachment that holds mushroom button in depressed position and can be padlocked.	**K110**

Protective Boots

KU1

KU17

KU37

KU27

These 9001KU protective boots are recommended for very dirty environments or severe hose down, but they are not required for UL Type 4 or 4X rating on the 9001SK operators. The 9001K1 wrench (see page 59) is required for installation of these boots.

For Non-Illuminated Push Buttons *(3)*		Clear Color for	Reference
Color	**Reference**	Standard knob selector switch	**KU17**
Black	**KU1**	Gloved-hand cap for use on standard knob selector switch	**KU18**
Red	**KU2**		
Blue	**KU3**		
Brown	**KU4**	Standard pilot light and maintained contact push buttons	**KU27**
Green	**KU5**		
Yellow	**KU6**		
Clear	**KU7**	Push-to-test and illuminated push button without guard	**KU37**
Clear	**KU8**		
(Provides Full Guard)		Illuminated push button with guard	**KU47**

(3) Use KU27 for maintained contact push buttons.

Closing Plates

Round (1-1/2 in Dia.)

Description	Reference
Gray	**K51** *(4)*
Black	**K52** *(4)*

(4) Meets UL and NEMA 1, 2, 3, 4, 4X, 6, 12 and 13.

Product range: page 36
Specifications: page 38
Dimensions: page 60
Mounting: page 61

Harmony™ 9001K/SK/KX 30 mm push buttons

9001SK – Accessories

Note: When ordering, add prefix "9001" to the reference.

Accessories

Description	Color	Reference	Package Qty.
Color inserts for KR1, KR2, KR3, KR11, KR12, KRD, T, TRD	Black	**T8BK**	10
	Blue	**T8BE**	
	Gray	**T8GY**	
	Green	**T8GN**	
	Orange	**T8OE**	
	Red	**T8RD**	
	Universal *(1)*	**T8U**	7
	White	**T8WH**	10
	Yellow	**T8YW**	
1.375 in Snap-in Mushroom knob for KR4 *(3)*	Black	**K16B**	1
	Blue	**K16L**	
	Green	**K16G**	
	Orange	**K16S**	
	Red	**K16R**	
	Red *(2)*	**K16R05**	
	Yellow	**K16Y**	
2-1/4 in Snap-in Mushroom knob for KR5 *(4)*	Black	**K17B**	1
	Blue	**K17L**	
	Green	**K17G**	
	Orange	**K17S**	
	Red	**K17R**	
	Red *(2)*	**K17R05**	
	Yellow	**K17Y**	
1-3/8 in Screw-on Mushroom knob for KR24 *(5)*	Black	**K92B**	1
	Blue	**K92L**	
	Green	**K92G**	
	Orange	**K92S**	
	Red	**K92R**	
	Yellow	**K92Y**	
2-1/4 in Screw-on Mushroom knob for KR25 *(6)*	Black	**K93B**	1
	Blue	**K93L**	
	Green	**K93G**	
	Orange	**K93S**	
	Red	**K93R**	
	Yellow	**K93Y**	
Push-pull Knobs for KR8, KR9 Operators	Amber	**A22**	1
	Black *(7)*	**B23**	
	Blue	**L22**	
	Clear	**C22**	
	Green	**G22**	
	Orange *(7)*	**S23**	
	Red	**R22**	
	Red *(10)*	**R2205**	
	White	**W22**	
	Yellow	**Y22**	
Color Inserts for Dual Function Operators KR6, KR7, KR67	Black	**B19**	10
	Green	**G19**	
	Red	**R19**	
	Universal *(8)*	**U19**	
Standard Color Caps for Illuminated Push Buttons K1L, K2L, K3L	Amber	**A7**	1
	Blue	**L7**	
	Clear	**C7**	
	Green	**G7**	
	Red	**R7**	
	White	**W7**	
	Yellow	**Y7**	
Knob for KR9R94	Red	**R94**	1
Metal Knob for KR24	Red	**K92RM**	1
	Green	**K92GM**	
	Black	**K92BM**	
Metal Knob for KR25	Red	**K93RM**	1
	Green	**K93GM**	
	Black	**K93BM**	
Metal Knob for KR9 (40 mm)	Red	**K94RM**	1
	Green	**K94GM**	
	Black	**K94BM**	
Metal Knob for KR9 (60 mm)	Red	**K95RM**	1
	Green	**K95GM**	
	Black	**K95BM**	

Description	Color	Reference	Package Qty.
1-3/8 in Mushroom Knob for Illuminated Push Buttons K2L *(9)*	Amber	**A20**	1
	Blue	**L20**	
	Clear	**C20**	
	Green	**G20**	
	Red	**R20**	
	White	**W20**	
	Yellow	**Y20**	
2-1/4 in Mushroom Knob for Illuminated Push Buttons K2L *(9)*	Amber	**A21**	1
	Blue	**L21**	
	Clear	**C21**	
	Green	**G21**	
	Red	**R21**	
	White	**W21**	
	Yellow	**Y21**	
Plastic Fresnel Pilot Light Lens for KP, KT	Amber	**A31**	1
	Blue	**L31**	
	Clear	**C31**	
	Green	**G31**	
	Red	**R31**	
	White	**W31**	
	Yellow	**Y31**	
Domed Plastic Pilot Light Lens for KP, KT	Amber	**A9**	1
	Blue	**L9**	
	Clear	**C9**	
	Green	**G9**	
	Red	**R9**	
	White	**W9**	
	Yellow	**Y9**	
Glass Pilot Light Lens for KP, KT	Amber	**A6**	1
	Blue	**L6**	
	Clear	**C6**	
	Green	**G6**	
	Red	**R6**	
	White	**W6**	
	Yellow	**Y6**	
Standard Selector Switch Knob for 9001K Selector Switches	Amber	**A8**	1
	Black *(7)*	**B11**	
	Blue	**L8**	
	Clear	**C8**	
	Green	**G8**	
	Orange *(7)*	**S11**	
	Red	**R8**	
	White	**W8**	
	Yellow	**Y8**	
Gloved-Hand Selector Switch Knob for 9001K Selector Switches	Amber	**A24**	1
	Black *(7)*	**B25**	
	Blue	**L24**	
	Clear	**C24**	
	Green	**G24**	
	Orange *(7)*	**S25**	
	Red	**R24**	
	White	**W24**	
	Yellow	**Y24**	
Color Inserts for KQ and TQ Selector Push Buttons	Black	**T5BK**	10
	Blue	**T5BE**	
	Green	**T5GN**	
	Orange	**T5OE**	
	Red	**T5RD**	
	White	**T5WH**	
	Yellow	**T5YW**	

Description	Cam	Reference
Selector Switch Cams	B	**K13B**
	C	**K13C**
	D	**K13D**
	E	**K13E**
	F	**K13F**
	G	**K13G**
	H	**K13H**
	J	**K13J**
	L	**K13L**
	M	**K13M**

(1) Includes one each of the following color inserts: Black, Red, Green, Yellow, Orange, Blue, and White.
(2) "EMERGENCY STOP" is in raised letters and hot stamped white across the front of the mushroom button.
(3) The mushroom button cap listed here may be assembled to a 9001KR1U to form a 9001KR4.
(4) The mushroom button cap listed here may be assembled to a 9001KR1U to form a 9001KR5.
(5) The mushroom button cap listed here may be assembled to a 9001KR20 to form a 9001KR24.
(6) The mushroom button cap listed here may be assembled to a 9001KR20 to form a 9001KR25.
(7) These color caps are opaque and are for use on non-illuminated operators only.
(8) Includes two of each of the following color inserts: Black, Red, and Green.
(9) May be used on KR8 and KR9 operators. Order mushroom button and K54 adapter (no charge) from page 59. Using the K54 adapter voids Type 6 rating.
(10) Red knob with "Push Emergency Stop" marked on top of knob.

Harmony™ 9001K/SK/KX 30 mm push buttons

9001SK – Replacement parts

Ring Nuts

Used On	Reference
SK1L	**9001SK44**
—	**—**
—	**—**
SK20, SK21, SK22, SK23	**9001SK45**
SK20, SK21, SK22, SK23 *(3)*	**9001SK46**
SK2L	**9001SK49**
—	**—**
—	**—**
SKP, SKTR	**9001SK41**
SKR1	**9001SK41**
SKR11	**9001SK42**
SKR12 *(1)*	**9001SK42**
SKR12 *(2)*	**9001SK41**
—	**—**
SKR2	**9001SK42**
—	**—**
—	**—**
SKR25	**9001SK49**
SKR3	**9001SK40**
SKR4	**9001SK41**
SKR5	**9001SK41**
—	**—**
—	**—**
—	**—**
SKR8	**6509704401**
SKR9	**9001SK41**
SKS	**9001SK45**
SKS *(3)* SKRU11 SKRU1,2,3,4,5,10	**9001SK46** **9001SK41** **9001SK40**
SKT	**9001SK49**

(1) Maintained button of two button operator.
(2) Momentary button of two button operator.
(3) Secondary ring nut (holds knob on selector switch or potentiometer).

Replacement Lamps For Series A–F (black) Light Modules

Light Module Reference	Lamp Number (ANSI)	Schneider Electric Replacement Lamp Reference
KM1	GE44 *(4)*	**—**
KM2	GE1490	**2550101003**
KM3	GE44 *(4)*	**—**
KM4	GE1490	**2550101003**
KM5	GE44 *(4)*	**—**
KM6	GE44 *(4)*	**—**
KM7	GE44 *(4)*	**—**
KM8	GE44 *(4)*	**—**
KM9	GE755	**2550101020**
KM11	CMDK1A5	**2550105014**
KM12	CMDK1A5	**2550105014**
KM13	CMDK1A5	**2550105014**
KM14	CMDK1A5	**2550105014**
KM15	CMDK1A5	**2550105014**
KM21	SYL12PSB	**2550105003**
KM22	SYL12PSB	**2550105003**
KM23	SYL28PSB	**2550105008**
KM25	SYL120PSB	**2550105005**
KM31	SYL6PSB	**2550105007**
KM32	SYL12PSB	**2550105003**
KM34	SYL24PSB	**2550105004**
KM35	SYL28PSB	**2550105008**
KM36	SYL48PSB	**2550105009**
KM37	SYL60PSB	**2550105010**
KM38	SYL120PSB	**2550105005**

(4) GE44 and GE755 are interchangeable (GE755 gives longer life). If a GE44 lamp is ordered, a GE755 (2550101020) will be substituted. For a replacement lamp in a current series light module see the light module listing on page 54.

Repair Parts

Description	Reference
E10 Key	**2941101100**
Gray cap for 9001SKR11, or 9001SKR12	**3105217001**
Clear plastic top (only) for 9001SK44 Ring Nut	**4487D63XI**
Gasket for 9001K and 9001SK Push-pull Knob	**6509701801**
Gasket for Plastic Illuminated Lens	**6509701901**
Gasket for 9001SK selector switch knob	**3105406401**
Black Compensating Gasket	**6509702001**
Liner for Non-Illuminated Operators	**6509704901**
Locking Thrust Washer	**6512231201**
Nylon Spacer	**6509705001**
Locking Thrust Washer (Std. 9001SK Operator)	**6512240601**
Push-pull Mushroom Adapter *(5)*	**9001K54**
Rubber Boot for Joystick	**6512243201**
Knob on Joysticks without latch	**4458D20X3**
Knob for SK Potentiometer	**3105404408**
Fingersafe Cover for 9001KM	**6508804101**

(5) Allows Type -20 and -21 mushroom color caps to be used on push-pull operators. Use of 9001K54 voids Type 6 rating.

KU Replacement Ring Nuts (Threaded Inside and Out)

Used On	Reference
KU1 through KU8, KU27, KU37, KU47	**3105204101**
KU17, KU18	**3105205901**

Interlock

For mechanically interlocking two push buttons so that only one button can be depressed at a time. A **K3** *attachment is furnished with the* **9001SKR11,SKR12, SKRU1** *and* **SKRU11** *operators. However, these are maintained operators and the* **K3** *interlock serves to release one of the buttons when the other is depressed. When used with momentary contact buttons, the* **K3** *interlock* **does not** *hold the buttons in the depressed position. It simply prevents pushing both buttons at the same time.*

The **K3** *interlock is mounted behind the operators. Operators not included.*

Reference
9001K3

Screwdriver

Reference	
9001K69	*Used to tighten mounting screws on contact blocks and light modules.*

Wrenches

K95

K1

Where Used	Reference
For tightening ring nuts on 22 and 30 mm control units	**9001K95**
For protective cap kits	**9001K1**

Product range: page 36
Specifications: page 38
Dimensions: page 60
Mounting: page 61

Harmony™ 9001K/SK/KX 30 mm push buttons

9001SK

Dimensions

Push buttons

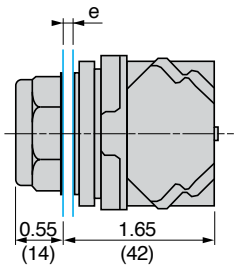

e: panel thickness 1 to 6 mm

Full guard 9001SKR1●●●

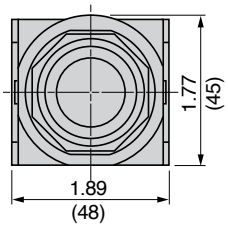

No guard 9001SKR3●●●

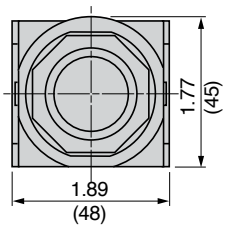

No guard with extended guard 9001SKR2●●●

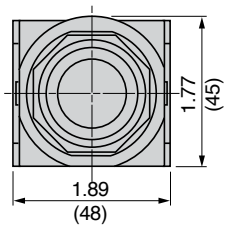

Mushroom head push buttons

Spring return 35 mm: 9001SKR24●H13, 9001SKR4RH6, 9001SKR9R20H6

Spring return 57 mm: 9001SKR25●H13, 9001SKR5RH6

Push-pull 35 mm: 9001SKR9R20H6

Push-pull 41 mm: 9001SKR9●H13, 9001SKR9RH6 9001SKR8●H25

Push-pull 57 mm: 9001SKR9R21H6

Spring return 35, 57 and 60 mm	a = 28 mm
Push-pull 35 to 60 mm	a = 32 mm

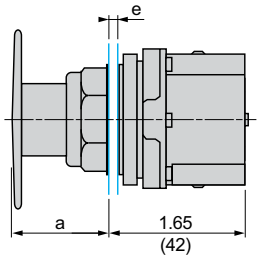

e: panel thickness 1 to 6 mm

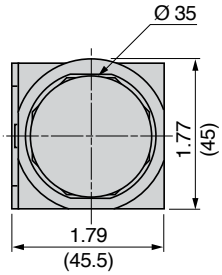

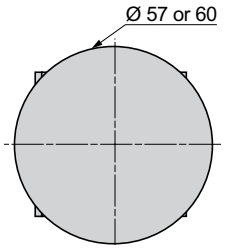

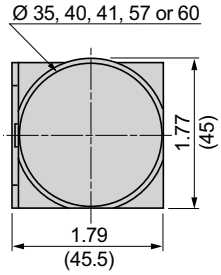

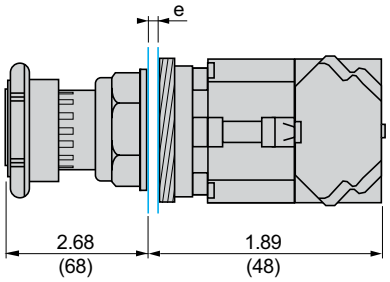

e: panel thickness 1 to 6 mm

Turn-to-release 9001SKR16H13, 9001SKR16H2 and 9001SKR16

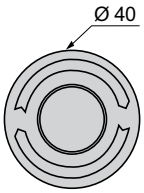

Selector switches

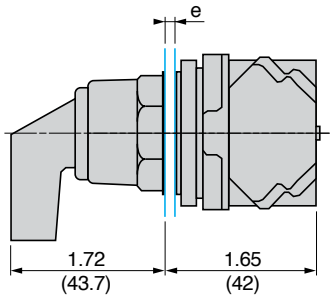

e: panel thickness 1 to 6 mm

Gloved handle 9001SKS●●FBH●●

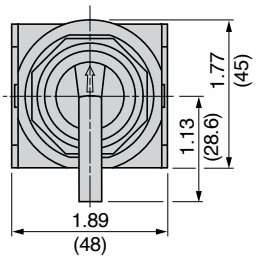

Dual Dimensions: in (mm)

Product range: page 36
Specifications: page 38
References: page 41
Mounting: page 61

Schneider Electric

Harmony™ 9001K/SK/KX 30 mm push buttons

9001SK

Mounting

Contact block mounting position

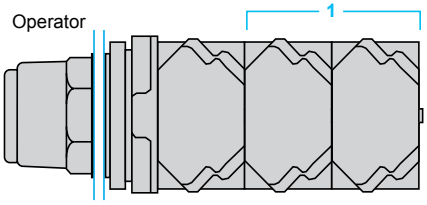

Side View

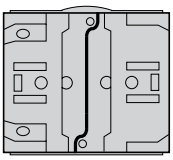

Side 1 Side 2

1 It is possible to mount up to 3 levels of contacts blocks (maximum of 6 contacts blocks) on 9001SK references. For Maximum Contact Block usage, see Page 50.

Panel cut-out

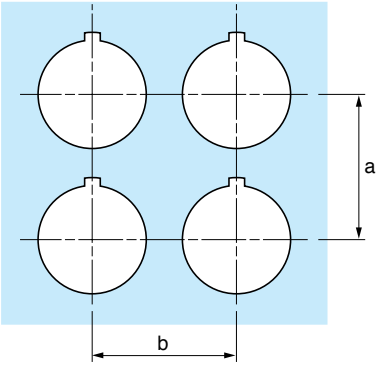

Individual cut-outs detail

2 alternatives

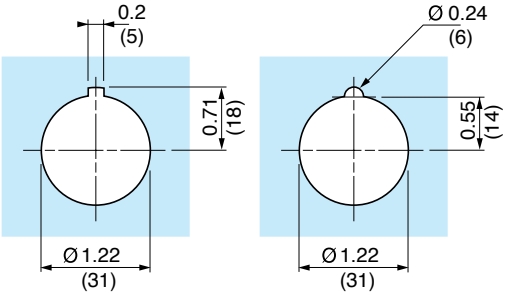

Preferred Cut-Out Alternate Cut-Out

Use Greenlee Tool #60242 for punching hole and notch.

Type of 9001K unit	Legend plate	a: in (mm)	b: in (mm)
All units except 57 mm mushroom head push buttons	9001KN2●●	2.25 (57.2)	1.75 (44.5)
	9001KN3●●	2.25 (57.2)	2.00 (50.8)
57 mm mushroom head push buttons	9001KN2●●	2.25 (57.2)	2.25 (57.2)
	9001KN3●●	2.25 (57.2)	2.25 (57.2)

Dual Dimensions: in (mm)

Dimensions *(continued)*

Pilot lights

With BA 9s bulb 9001SKP●●●

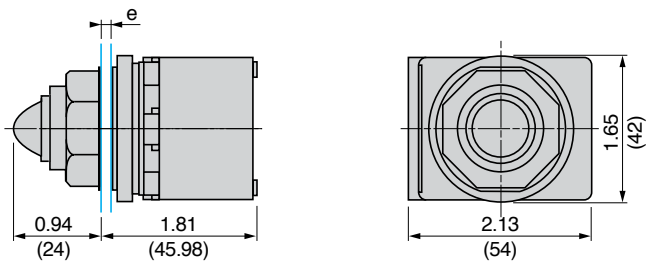

e: panel thickness 1 to 6 mm

Illuminated mushroom head push buttons

9001SKR●P●●●

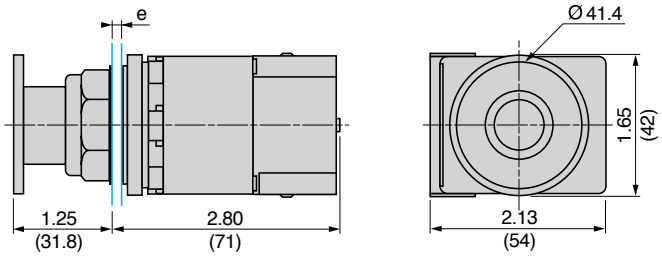

e: panel thickness 1 to 6 mm

Illuminated push buttons, spring return

Full guard 9001SK3L●●●●●H13

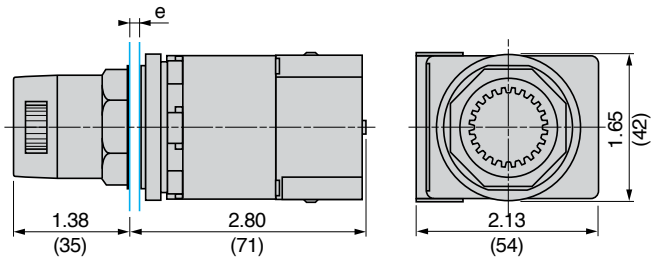

e: panel thickness 1 to 6 mm

Heads for spring return push buttons

9001SKR●U

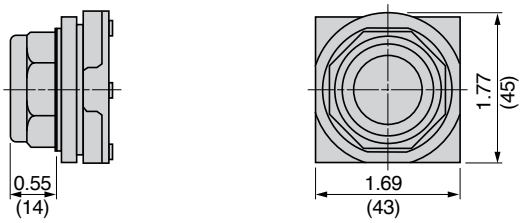

No guard 9001SK2L●●●●●H13

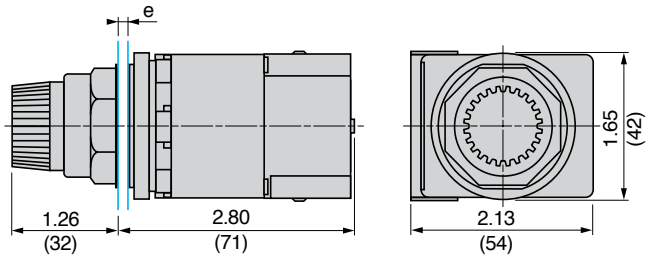

e: panel thickness 1 to 6 mm

Boots for push buttons

9001KU●

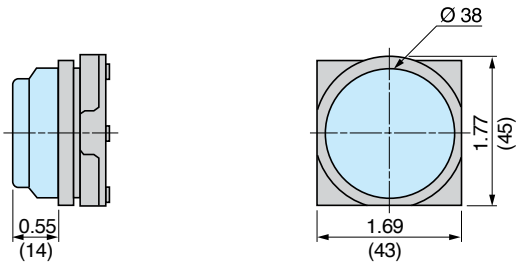

Push-to-test, no guard 9001SKT●●●●●31

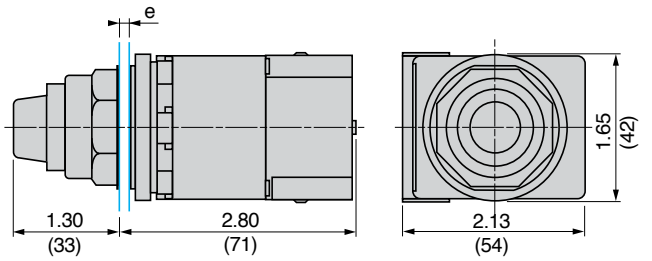

e: panel thickness 1 to 6 mm

Dual Dimensions: in (mm)

Dimensions *(continued)*

Rod for wobble stick

9001K8

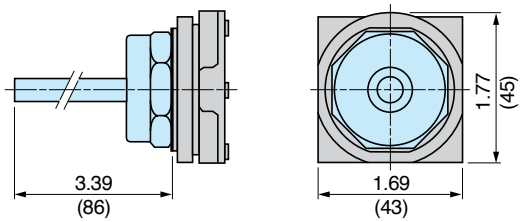

Light blocks for pilot lights and illuminated push buttons

9001KM●

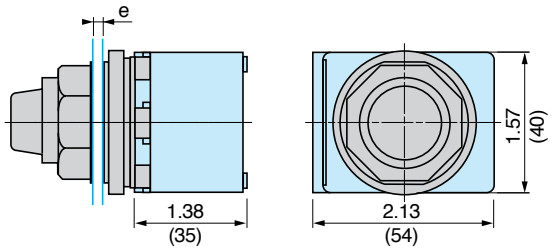

e: panel thickness 1 to 6 mm

Contact blocks for push buttons (including illuminated)

9001KA●

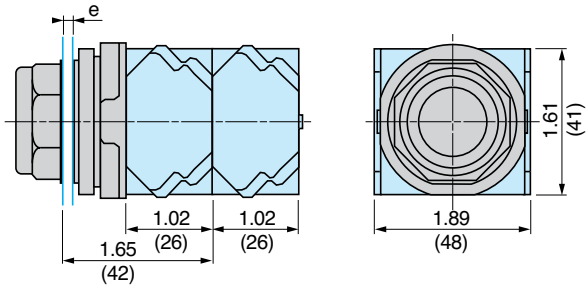

e: panel thickness 1 to 6 mm
It is not possible to mount complementary contact blocks 9001KA4 to KA6.

Legend plates

Aluminium plates 9001KN1●●, 9001KN2●●, 9001KN7●●

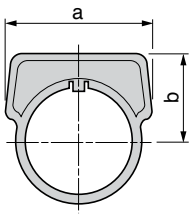

Legend plate	a: in (mm)	b: in (mm)
9001KN2●●	1.625 (41)	0.969 (24)
9001KN3●●	1.750 (45)	1.234 (31)

Plastic plates 9001KN1●●P, 9001KN2●●P, 9001KN7●●P

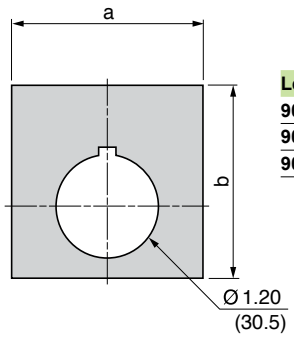

Legend plate	a: in (mm)	b: in (mm)
9001KN1●●P	2.25 (57)	2.25 (57)
9001KN2●●P	1.75 (45)	1.75 (45)
9001KN7●●P	2.50 (63)	2.50 (63)

Interlocked push buttons

9001SKR11, 9001SKR12

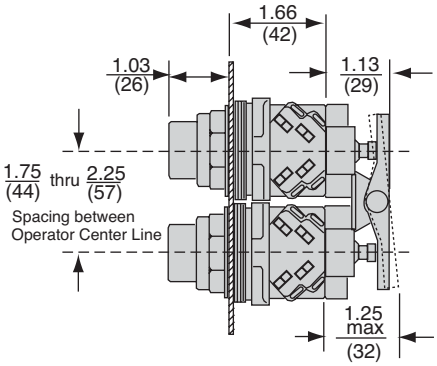

Potentiometer

9001SK20 *(1)*, **9001SK21** *(2)*

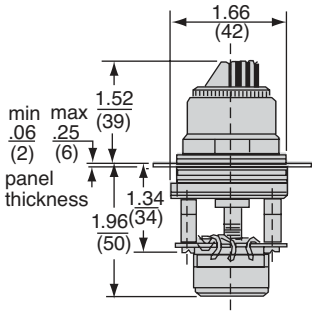

(1) Without potentiometer
(2) With potentiometer

9001SK22 *(1)*, **9001SK23** *(2)*

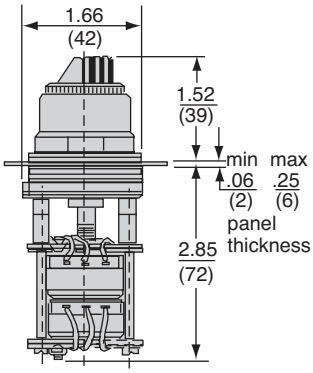

(1) Without potentiometer
(2) With potentiometer

Dual Dimensions: in (mm)

Dimensions *(continued)*

Time delay push button
9001KRD

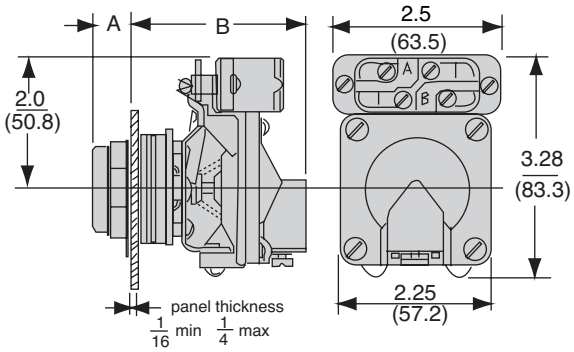

	a		b
9001KRD1UH●	Full guard	9/16	2-1/2
9001KRD2UH●	Extended guard	11/16	2-1/2
9001KRD3UH●	No guard	9/16	2-1/2

Alternate action—Push-on, push-off module
9001K85

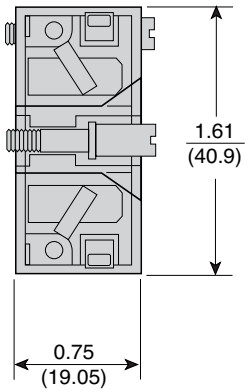

Emergency break glass operator
9001K15

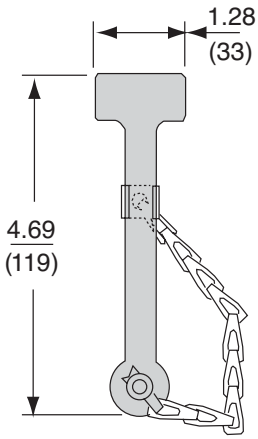

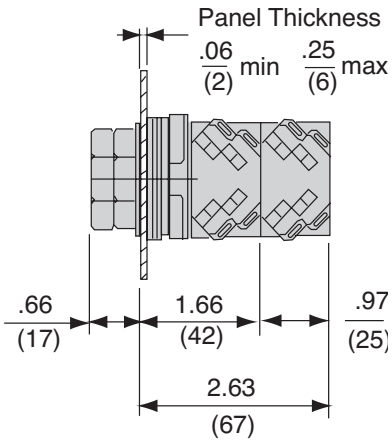

Rocker arm operating lever
9001K50

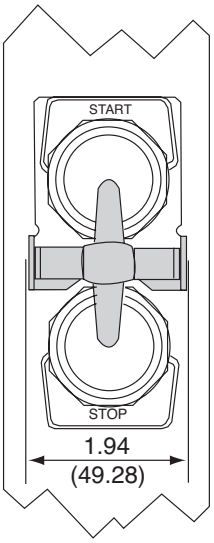

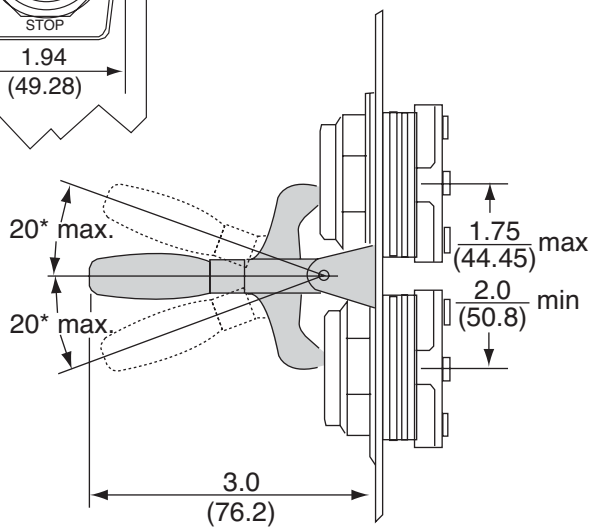

Dual Dimensions: in (mm)

Dimensions *(continued)*

Padlock attachments

9001K4

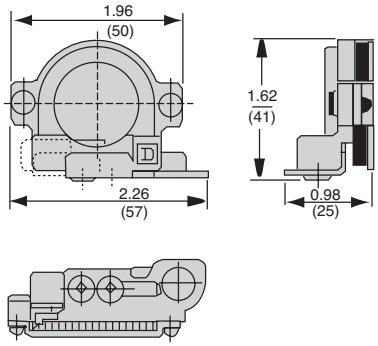

9001K96

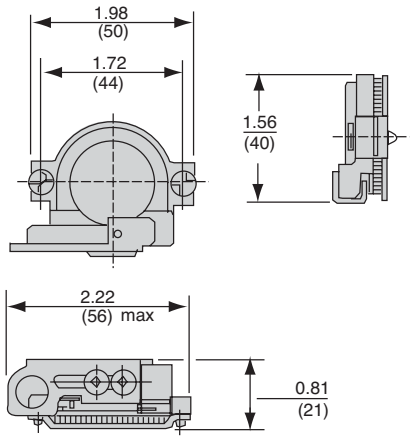

9001K7, 9001K107, 9001K108, 9001K109, 9001K113

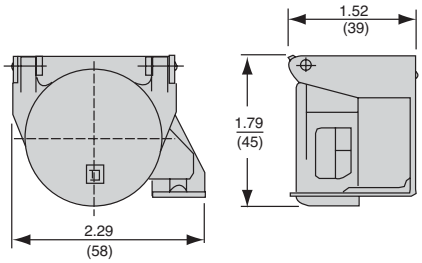

9001K6, 9001K60, 9001K97

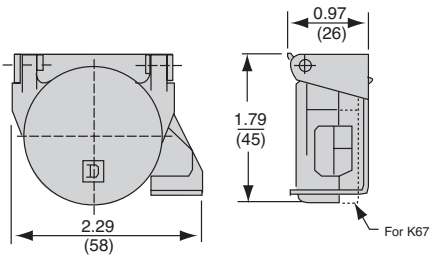

9001K62

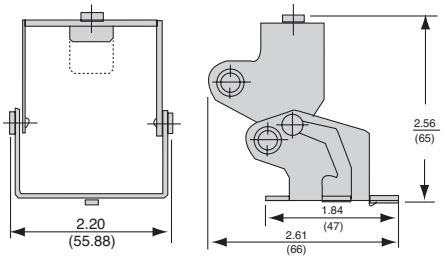

9001K5

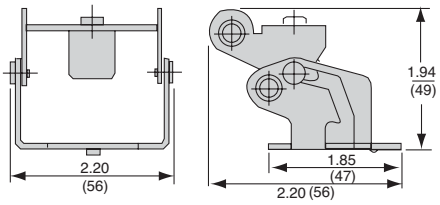

Mushroom button guards

9001K48

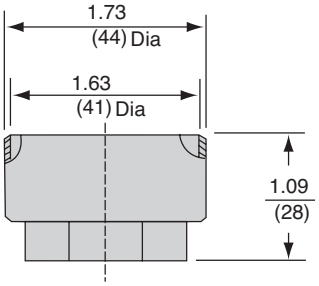

9001K56Y, 9001K56YM *(1)*

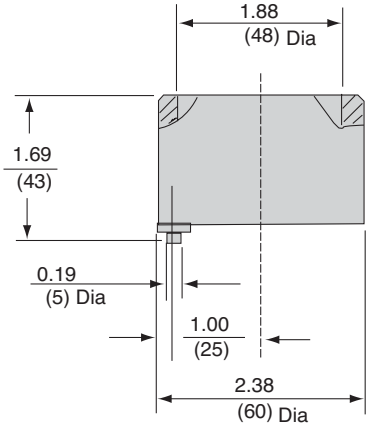

9001K68

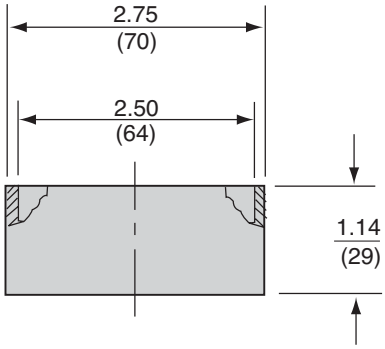

(1) 9001K56YM includes finger holes.

Dual Dimensions: in (mm)

Harmony™ 9001K/SK/KX 30 mm push buttons

9001KX – Square-shaped complete units

Complete units

Non-illuminated push buttons

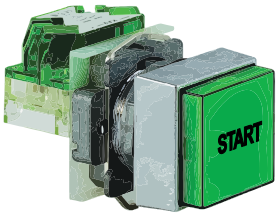

Non-illuminated single push button with contacts
9001KXRA133 See page 70

Non-illuminated dual push button with contacts
9001KXRC136 See page 70

Illuminated push buttons

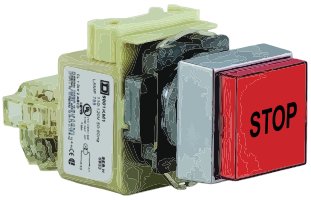

Illuminated single push button with contacts
9001KXRB1RH1 See page 70

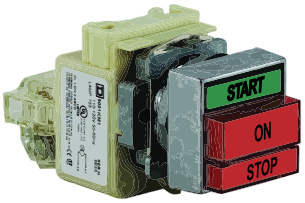

Dual push button with 1 pilot light and contacts
9001KXRG137 See page 70

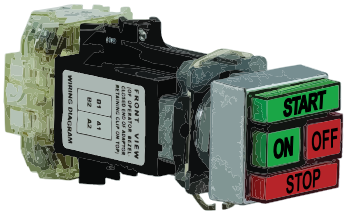

Dual push button with 2 pilot light and contacts
9001KXRL138 See page 70

Selector switches

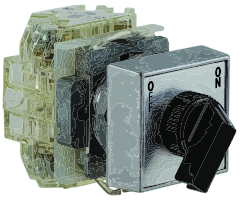

Selector switch
9001KXSA139 See page 71

Pilot lights

Pilot light
9001KXPA1R See page 71

Specifications: page 67
References: page 70
Dimensions: page 76

Harmony™ 9001K/SK/KX 30 mm push buttons

9001KX

Environmental specifications

Conforming to standards	CE Marked, RoHS		UL 508, CSA C22-2 n° 14, CE marked, RoHS compliant
Product certifications	UL File E78403 CCN NKCR; CSA File LR25490C Class 3211 03		UL File E78403, CSA File LR25490C, Guide 184N13-1U
Protective treatment standard version			"TC"
Ambient air temperature around the device	Storage	**°F (°C)**	-40 to +158 (-40 to +70)
	Operation	**°F (°C)**	-22 to +140 at 50% relative humidity (-30 to +60)
Degree of protection	Conforming to EN/IEC 60529		IP 66
	Conforming to NEMA		Types 1, 2, 3, 3R, 4, 12 and 13
Mechanical life (in millions of operating cycles)	Push buttons, spring return		5
	Illuminated push buttons		5
	Selector switches and key switches		0.5
Mounting position			All positions

Electrical characteristics of contact blocks

Rated operational characteristics	∿ AC-15		3 A, 240 V			
	⎓ DC-13		0.55 A, 125 V			
Rated insulation voltage	Conforming to EN/IEC 60947-1	**V**	Ui = 250 degree of pollution 3 (except pilot lights with incandescent bulb: degree of pollution 2)			
Rated impulse withstand voltage	Conforming to EN/IEC 60947-1	**kV**	Uimp = 2.5			
Contact material	Normal environment and usage		Silver alloy			
Contact operation	"N/C" ou "N/O"		Slow break			
Positive operation	Conforming to EN/IEC 60947-5-1	**N**	N/C contact(s) with positive opening operation			
Short-circuit protection	Conforming to EN/IEC 60947-5-1	**A**	Cartridge fuse mounted upstream: 10			
Cabling capacity (9001KA contact blocks and 9001KM light modules)	Conforming to EN/IEC 60947-1	**mm²** **mm²**	Screw clamp terminals (cross headedslotted screw) Mini: 1 x 0.22 Maxi: 2 x 1.5 Recommended tightening torque: 0.8 N.m (10 in-lbs)			
Thermal current	Ith	**A**	10			
Maximum operation current	a.c. supply: utilization category AC-15 NEMA A600		Contact making capacity			
		V	120	240	480	600
		A	60	30	15	12
		VA	7200	7200	7200	7200
			Breaking capacity			
		V	120	240	480	600
		A	6	3	1.5	1.2
		VA	720	720	720	720
	d.c.supply: utilization category DC-13 NEMA Q600		Contact making capacity and breaking capacity			
		V	125	250	600	
		A	0.55	0.27	0.1	

Product range: page 66
References: page 70
Dimensions: page 76

Harmony™ 9001K/SK/KX 30 mm push buttons

9001KX

Basic Operators

Description	UL Types/NEMA Types 4, 4X, 13
Single Push Buttons	**9001KXRA, 9001KXRB**
Dual Push Buttons	**9001KXRC, 9001KXRD, 9001KXRE**
Dual Push Buttons with One Pilot Light	**9001KXRG, 9001KXRJ**
Dual Push Buttons with Two Pilot Light	**9001KXRL**
Selector Switches	**9001KXS**
Potentiometers	**9001KXB**

Non Hazardous Locations:

File CCN E42259 NKCR

File Class LR25490 3211 03

Marking

The KX operators are rated UL Types 1, 2, 3, 3R, 4, 4X, 6, 12, 13/ NEMA Types 1, 2, 3, 3R, 4X, 6, 12, 13 without the use of protective boots. Boots are recommended for dirty environments or areas that are hosed down with water under very high pressure.

Mounting

Panel cut-out

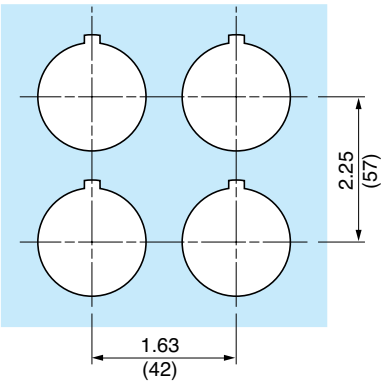

Individual cut-outs detail

2 alternatives

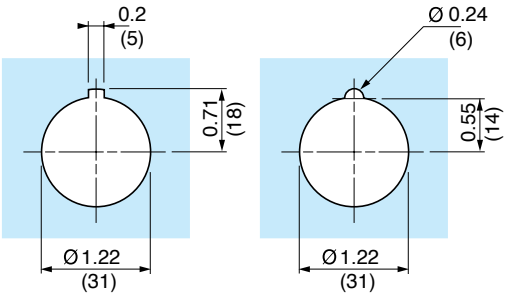

Preferred Cut-Out

Alternate Cut-Out

Use Greenlee Tool #60242 for punching hole and notch.

9001KX Operator Materials

Single Push Button (KXRA, KXRB, KXRN, KXRP, KXTA)

Gasket – Nitrile
Locking Head – ZAMAC #3
Screws – Steel
Terminals – Steel
Button – Polycarbonate
Seal – Nitrile
Seal Retainer – Steel
Bezel – Zinc
Stem – Polycarbonate
Stem Cover – Polycarbonate
Legend Insert – Polyester
Return-Spring – Music Wire
Ring Nut – Zinc or Aluminum
Adaptor – Zinc
Adaptor Mounting Clip – Music Wire
Liner – Nylon

Dual Push Button
(Non-Illuminated and Illuminated)
(KXRC, KXRD, KXRE, KXRF, KXRG, KXRH, KXRJ, KXRK, KXRL, KXRM, KXTC)

Gasket – Nitrile
Seal – Nitrile
Seal Retainer – Brass
Bezel – Zinc
Button Stem – Stainless Steel
Button – Polycarbonate
Button Cover – Polycarbonate
Legend Insert – Polyester
Lamp Cover – Polycarbonate
Lens Retainer – Polycarbonate
Lens – Polycarbonate
Return-Spring – Music Wire
Ring Nut – Zinc or Aluminum
Adaptor – Zinc
Adaptor Mounting Clip – Music Wire
Liner – Nylon
Retainer Ring – Steel
Interlock Pad – Polyester
Interlock – Sintered Steel
Interlock – Nylon (KXRD)
Pin – Steel (KXRE, KXRF)
Detent Bearing – Steel (KXRE, KXRF)
Detent Spring – Music Wire (KXRE, KXRF)
Interlock – Steel (KXRM)
Baffle – Steel
Locking Head – ZAMAC #3
Screws – Steel
Stem – Polycarbonate
Stem Cover – Polycarbonate
Terminals – Steel

Selector Switch
(Non-Illuminated and Illuminated) (KXS)

Gasket – Nitrile
Seal – Nitrile
Seal Retainer – Steel
Return Spring – Music Wire
Cam Rotor – Celenex 3300
Cam Follower – Delrin 100
Cam Carrier – Trogamid
Cam Profile – Delrin 100
Bearing – Polyester
Bezel – Zinc
Knob – Polycarbonate or Nylon
Knob Ring Nut – Polycarbonate
Knob Seal – Nitrile
Legend Plate – ABS
Plug Insert – Polyester
Key Plug – Zinc, Brass, Music Wire
Key – Brass
Locking Head – Zinc
Locking Head Seal – Nitrile
Insert – Zinc
Adaptor – Zinc
Adaptor Mounting Clip – Music Wire
Liner – Nylon
Ring Nut – Zinc or Aluminum
Terminals – Steel
Screws – Steel

Contact Block (9001KA)

Housing– Amorphous Nylon
Contact Slider– Nylon or Acetal
Terminal– Steel
Saddle Clamp– Steel
Spring– Steel
Contacts– Silver and Copper
Blade– Beryllium Copper
Label– Paper
Shrouds– Delrin 507
Lockout– 410 Stainless Steel
Closing Plate– ZAMAC #3
Boots– Neoprene

Potentiometer (KXBA, KXBB, KXBC, KXBD):

Pot – Clarostat Types J and EJ
Operator – ZAMAC #3
Legend Plate – ABS
Knob – Polycarbonate
Printed circuit board – Phenolic
Cam Rotor – Polyester
Cam – Acetal
Cam Carrier – Nylon
Adaptor – ZAMAC #3
Adaptor Spring – Square Music Wire
Spacer – Fiber Board
Gasket – Buna N
Terminal – Brass
Screws – Steel
Bezel – Zinc
Locking Head – ZAMAC #3
Legend Inserts (KXN100, KXN200, KXN300, KXN400, KXN500) – 0.005 Thk. Matte Polyester
Legend Plates (KXN-600, KXN-700) – ABS

Pilot Light (KXPA, KXPB, KXPC, KXTE)

O-Ring – Nitrile
Bezel – Zinc
Button – Polycarbonate
Button Cover – Polycarbonate
Button Stem – Polycarbonate
Screws – Steel
Terminals – Steel
Lens Assembly – Polycarbonate
Baffle – Steel
Ring Nut – Zinc or Aluminum
Adaptor – Zinc
Adaptor Mounting Clip – Music Wire

Light Module (Single Lamp KM)

Housing – Thermoplastic Polyester
Socket – Steel
Terminal – Steel with Tin Plate
Saddle Clamp – Steel
Translating Pin – Polycarbonate
Transformer – Thermoplastic Polyester, Steel, Copper, Polyvinyl Chloride, Polytetrafluoroethylene, Acetate, Paper
Lamp Spring – Tin Plated Music Wire

Light Module (2 Lamp KXAKM2)

Adaptor Screw – Steel
Housing – Thermoplastic Polyester
Lamp Terminal – Copper
Terminal – Steel
Saddle Clamp – Steel
Contact Spring – Copper
Translating Pin – Polycarbonate
Transformer – Thermoplastic Polyester, Steel, Copper, Polyvinyl Chloride, Polytetrafluoroethylene, Acetate, Paper

Light Module (4 Lamp KXAKM4)

Housing – Thermoplastic Polyester
Lamp Terminal – Copper
Adaptor Screw – Steel
Terminal – Steel
Saddle Clamp – Steel
Transformer – Nylon, Steel, Copper, Polyvinyl Chloride, Polytetrafluoroethylene, Acetate, Paper

Product range: page 66
References: page 70
Dimensions: page 76

Harmony™ 9001K/SK/KX 30 mm push buttons

9001KX – Push buttons with contacts

Note: When ordering, add prefix "9001" to the reference.

Push Buttons—Single, with Contacts

Description	Button Color	Legend Marking	Contacts	Voltage	Reference
Non-Illuminated	Green	Start	1 N/O	—	**KXRA133**
	Red	Stop	1 N/C	—	**KXRA134**
	Amber	blank	2 N/O + 2 N/C	—	**KXRAAH2**
	Green	blank	2 N/O + 2 N/C	—	**KXRAGH2**
	Blue	blank	2 N/O + 2 N/C	—	**KXRALH2**
Illuminated	Amber	blank	1 N/O + 1 N/C	24	**KXRB34AH1**
	Green	blank	1 N/O + 1 N/C	24	**KXRB34GH1**
	Red	blank	1 N/O + 1 N/C	24	**KXRB34RH1**
	Amber	blank	1 N/O + 1 N/C	110/120	**KXRB1AH1**
	Green	blank	1 N/O + 1 N/C	110/120	**KXRB1GH1**
	Red	blank	1 N/O + 1 N/C	110/120	**KXRB1RH1**

Push Buttons—Dual, with Contacts

Description	Top Button (#1)	Lower Button (#2)	Contacts	Reference
Momentary	Start (Green)	Stop (Red)	2 N/O + 2 N/C	**KXRC111**
Momentary	Start (Green)	Stop (Red)	1 N/O, 1 N/C	**KXRC136**
Momentary	Up (Green)	Down (Green)	2 N/O	**KXRD140**
Momentary	blank (Blue)	blank (Blue)	2 N/O	**KXRDLLH7**
Maintained *(1)*	Start (Green)	Stop (Red)	1 N/O + 1 N/C	**KXRE115**
Maintained *(1)*	On (Blue) *(2)*	Off (Blue) *(2)*	3 C/O	**KXRELLH3**
Maintained *(1)*	On (Blue) *(2)*	Off (Blue) *(2)*	3 C/O	**KXRELLH3**
Maintained *(1)*	On (Blue) *(2)*	Off (Blue) *(2)*	2 N/O + 2 N/C	**KXRELLH2**

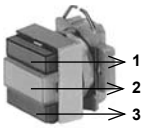

Pilot Light at 110–120 V, 50–60 Hz Transformer

Push Buttons—Dual with One Pilot Light and Contacts

Description	Top Button (#1)	Middle Lens (#2)	Lower Button (#3)	Contacts	Voltage	Reference
Momentary	Start (Green)	On (Red)	Stop (Red)	2 N/O + 2 N/C	110/120	**KXRG117**
Momentary	Start (Green)	On (Red)	Stop (Red)	1 N/O, 1 N/C	110/120	**KXRG137**
Maintained *(1)*	Start (Green)	On (Red)	Stop (Red)	1 N/O + 1 N/C	110/120	**KXRJ119**

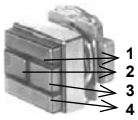

Pilot Lights at 110–120 V, 50–60 Hz Transformer

Push Buttons—Dual with Two Pilot Lights and Contacts

Description	Top Button (#1)	Left Lens (#2)	Right Lens (#3)	Lower Button (#4)	Contacts	Voltage	Reference
Momentary	Start (Green)	On (Red)	Off (Green)	Stop (Red)	2 N/O + 2 N/C	110/120	**KXRL121**
Momentary	Start (Green)	On (Red)	Off (Green)	Stop (Red)	1 N/O, 1 N/C	110/120	**KXRL138**
Momentary	Start (Green)	On (Red)	Off (Green)	Stop (Red)	2 N/O + 2 N/C	24	**KXRL34GRGRH2**
Momentary	Start (Green)	On (Red)	Off (Green)	Stop (Red)	1 N/O, 1 N/C	24	**KXRL34GRGRH37**

(1) Maintained operators are mechanically interlocked.
(2) Text is vertical.

Product range: page 66
Specifications: page 67
Dimensions: page 76

Schneider Electric

Harmony™ 9001K/SK/KX 30 mm push buttons

9001KX – Push buttons without contacts

Note: When ordering, add prefix "9001" to the reference.

Push Buttons—without Contacts *(1)*

Push Button	Action	Lens Color (1)	Lens Color (2)	Reference
Single Push Button				
Non-Illuminated	Momentary	Amber	—	**KXRAA**
		Green	—	**KXRAG**
		Blue	—	**KXRAL**
		Red	—	**KXRAR**
		White	—	**KXRAW**
Illuminated 24 V	Momentary	Amber	—	**KXRB35A**
		Green	—	**KXRB35G**
		Blue	—	**KXRB35L**
		Red	—	**KXRB35R**
		White	—	**KXRB35W**
Illuminated 110/120 V	Momentary	Amber	—	**KXRB38A**
		Green	—	**KXRB38G**
		Blue	—	**KXRB38L**
		Red	—	**KXRB38R**
		White	—	**KXRB38W**
Dual Push Button				
Non-Illuminated	Momentary + Interlock	Green	Red	**KXRCGR**
		White	White	**KXRCWW**
		Green	Green	**KXRCGG**
	Maintained + Interlock	Green	Red	**KXREGR**
		White	White	**KXREWW**
		Green	Green	**KXREGG**

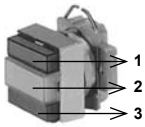

Dual Push Button with Pilot Light—without Contacts *(1)*

Action	Voltage	Lens Color (1)	Lens Color (2)	Lens Color (3)	Lens Color (4)	Reference
With One Pilot Light						
Momentary	24 Vac/dc	Red	White	Green	—	**KXRG35RWG**
	24 Vac/dc	Green	White	Green	—	**KXRG35GWG**
	110/120 Vac/dc	Red	White	Green	—	**KXRG38RWG**
	110/120 Vac/dc	Green	White	Green	—	**KXRG38GWG**
Momentary + Interlock	24 Vac/dc	Red	White	Green	—	**KXRH35RWG**
	24 Vac/dc	Green	White	Green	—	**KXRH354GWG**
	110/120 Vac/dc	Red	White	Green	—	**KXRH38RWG**
	110/120 Vac/dc	Green	White	Green	—	**KXRH38GWG**
Maintained + Interlock	24 Vac/dc	Red	White	Green	—	**KXRJ35RWG**
	24 Vac/dc	Green	White	Green	—	**KXRJ35GWG**
	110/120 Vac/dc	Red	White	Green	—	**KXRJ38RWG**
	110/120 Vac/dc	Green	White	Green	—	**KXRJ38GWG**
With Two Pilot Lights						
Momentary	24 Vac/dc	Red	White	White	Green	**KXRL35RWWG**
	24 Vac/dc	Red	Red	Green	Green	**KXRL35GGRR**
	110/120 Vac/dc	Red	White	White	Green	**KXRL38RWWG**
	110/120 Vac/dc	Red	Red	Green	Green	**KXRL38GGRR**
Momentary + Interlock	24 Vac/dc	Red	White	White	Green	**KXRM35RWWG**
	24 Vac/dc	Red	Red	Green	Green	**KXRM35RRGG**
	110/120 Vac/dc	Red	White	White	Green	**KXRM38RWWG**
	110/120 Vac/dc	Red	Red	Green	Green	**KXRM38RRGG**

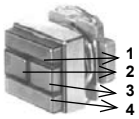

(1) Order contacts separately (see page 73). For accessories, see page 74.

Harmony™ 9001K/SK/KX 30 mm push buttons

9001KX – Selector switches, contact blocks

Note: When ordering, add prefix "9001" to the reference.

Selector Switches—with Contacts

Description	Legend	Knob	Contacts	Reference
2-Position, maintained	Off-On	Black	1 0 0 1	**KXSA125**
2-Position, maintained	Off-On	Black	1 0	**KXSA139**
3-Position, maintained	Hand-Off-Auto	Black	1 0 0 0 0 1	**KXSD126**

Selector Switches—without Contacts *(1)*

Description		Voltage	Knob Color	Reference
2-Position, Maintained	Non-Illuminated	—	Black	**KXSAEB**
	Illuminated	24 Vac/dc	Red	**KXSJE35R**
	Illuminated	24 Vac/dc	Green	**KXSJE35G**
	Illuminated	24 Vac/dc	White	**KXSJE35W**
	Illuminated	120 Vac/dc	Red	**KXSJE38R**
	Illuminated	120 Vac/dc	Green	**KXSJE38G**
	Illuminated	120 Vac/dc	White	**KXSJE38W**
	Key (Withdraw L)	—	N/A	**KXSRE1**
	Key (Withdraw R)	—	N/A	**KXSRE2**
	Key (Withdraw Both)	—	N/A	**KXSRE3**
3-Position, Maintained	Non-Illuminated	—	Black	**KXSDCB**
	Key (Withdraw C)	—	N/A	**KXSVC5**
	Key (Withdraw All)	—	N/A	**KXSVC10**
4-Position, Maintained	Non-Illuminated	—	Black	**KXSHHB**

(1) Order contacts separately (see table below).

Contact Blocks—Purchase Separately

		Description	Reference			Description	Reference
	Clear Cover	1 N/O, 1 N/C	**KA1**		Clear Cover	1 N/C, 1 N/O (Early Make)	**KA4**
	Green Cover	1 N/O	**KA2**		Red Cover	1 N/C (Late Break)	**KA5**
	Red Cover	1 N/C	**KA3**		Green Cover	1 N/O (Early Make)	**KA6**

Maximum Contact Block Usage:

2 blocks mounted side by side only: Any 2 or 3-Position spring return selector switch (non-illuminated, illuminated or keyed).

2 blocks mounted in tandem on one side only: Any 2 operator interlocked push button.

2 blocks mounted in tandem (total of four blocks): Any selector push button, keyed push button, 2 or 3-Position maintained selector switch (non-illuminated, illuminated or keyed), push pull operators (non-illuminated or illuminated), joy stick, dual push button.

3 blocks mounted in tandem (total of six blocks): Single momentary push buttons (non-illuminated or illuminated).

Potentiometers

Description	Power	Resistance	Reference
Single	2 W	3.2 kΩ	**KXBB06**
Single	2 W	5 kΩ	**KXBB07**
Single	2 W	10 kΩ	**KXBB08**
Tandem	2 W	5 kΩ / 5 kΩ	**KXBD83**

Product range: page 66
Specifications: page 67
Dimensions: page 76

Schneider Electric

Harmony™ 9001K/SK/KX 30 mm push buttons

9001KX – Pilot lights

Note: When ordering, add prefix "9001" to the reference.

110–120 V, 50–60 Hz Transformer

110–120 V, 50–60 Hz. Transformer

110–120 V, 50–60 Hz Transformer

Pilot Lights

Description	Voltage	Lens 1*	Lens 2*	Lens 3*	Lens 4*	Reference
Single	24	Amber				**KXPA35A**
Single	24	Red				**KXPA35R**
Single	24	Green				**KXPA35G**
Single	24	White				**KXPA35W**
Single	110/120	Amber				**KXPA1A**
Single	110/120	Red				**KXPA1R**
Single	110/120	Green				**KXPA1G**
Single	110/120	White				**KXPA1W**
Dual	24	Amber	Amber			**KXPB34AA**
Dual	24	Red	Red			**KXPB34RR**
Dual	24	Green	Green			**KXPB34GG**
Dual	24	White	White			**KXPB34WW**
Dual	24	Red	Green			**KXPB34RG**
Dual	110/120	Amber	Amber			**KXPB1AA**
Dual	110/120	Red	Red			**KXPB1RR**
Dual	110/120	Green	Green			**KXPB1GG**
Dual	110/120	White	White			**KXPB1WW**
Dual	110/120	Red	Green			**KXPB1RG**
Quad	24	White	Amber	Green	Red	**KXPC34WAGR**
Quad	110/120	White	Amber	Green	Red	**KXPC1WAGR**
Quad	110/120	White	Blue	Green	Red	**KXPC1WLGR**

** Lenses are blank (no markings)*

Product range: page 66
Specifications: page 67
Dimensions: page 76

Harmony™ 9001K/SK/KX 30 mm push buttons

9001KX – Legend plates

Note: When ordering, add prefix "9001" to the reference.

Legend Plates for Push Buttons or Pilot Lights

Used On

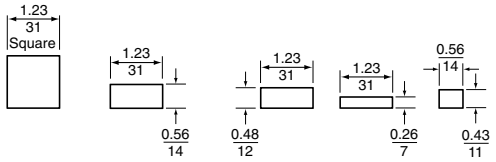

A B C (vertical) D E F

Marking	A	B	C	D	E	F
	KXRA, KXRB KXRN, KXRP KXPA, KXPC KXTA, KXTB KXTE	KXRC, KXRD KXRE, KXRF	KXPB KXTD *(3)*	KXRG, KXRH KXRJ, KXRK *(1)*	KXRG, KXRH KXRJ, KXRK KXRL, KXRM KXTC *(2)*	KXRL, KXRM KXTC *(1)*
Blank	KXN100	KXN200	KXN200	KXN300	KXN400	KXN500
Start	KXN101	KXN201	KXN201V	KXN301	KXN401	KXN501
Stop	KXN102	KXN202	KXN202V	KXN302	KXN402	KXN502
On	KXN103	KXN203	KXN203V	KXN303	KXN403	KXN503
Off	KXN104	KXN204	KXN204V	KXN304	KXN404	KXN504
Emerg. Stop	KXN105	KXN205	KXN205V	KXN305	KXN405	KXN505
Forward	KXN106	KXN206	KXN206V	KXN306	KXN406	KXN506
Reverse	KXN107	KXN207	KXN207V	KXN307	KXN407	KXN507
Close	KXN108	KXN208	KXN208V	KXN308	KXN408	KXN508
Open	KXN109	KXN209	KXN209V	KXN309	KXN409	KXN509
Down	KXN110	KXN210	KXN210V	KXN310	KXN410	KXN510
Up	KXN111	KXN211	KXN211V	KXN311	KXN411	KXN511
Jog	KXN118	KXN218	KXN218V	KXN318	KXN418	KXN518
Reset	KXN123	KXN223	KXN223V	KXN323	KXN423	KXN523
Run	KXN124	KXN224	KXN224V	KXN324	KXN424	KXN524
Cycle Start	KXN132	KXN232	KXN232V	KXN332	KXN432	KXN532
Motor Run	KXN136	KXN236	KXN236V	KXN336	KXN436	KXN536
Power On	KXN138	KXN238	KXN238V	KXN338	KXN438	KXN538
Special-Marking	KXN199	KXN299	KXN299V	KXN399	KXN499	KXN599

(1) These legend inserts are for the pilot lights in the center of the operator.
(2) These legend inserts are for the push button portion of the operator.
(3) These legend inserts have vertical printing.

Legend Plates for Selector Switches

Used On

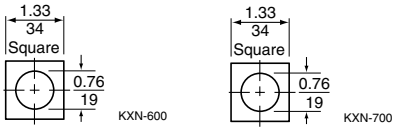

Marking	KXN-600	KXN-700
	KXSA, KXSB, KXSC, KXSD, KXSE, KXSF, KXSG, KXSH, KXSJ, KXSK, KXSL, KXSM, KXSN, KXSO, KXSP, KXSQ	KXSR, KXSS, KXST, KXSV, KXSW, KXSX, KXSY, KXSZ
Blank	KXN600	KXN700
For.-Rev.	KXN639	KXN739
Hand-Auto	KXN640	KXN740
Man-Auto	KXN643	KXN743
Off-On	KXN644	KXN744
On-Off	KXN645	KXN745
Open-Close	KXN646	KXN746
Start-Stop	KXN651	KXN751
Auto-Off-Hand	KXN658	KXN758
Hand-Off-Auto	KXN660	KXN760
Man-Off-Auto	KXN662	KXN762
Special Marking	KXN699	KXN799

Dual Dimensions: in (mm)

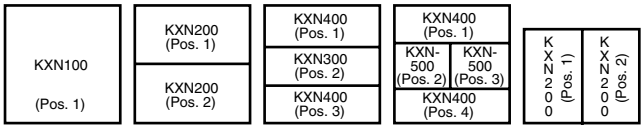

KXRA, KXRB KXRN, KXRP KXPA, KXPC KXTA, KXTB | KXRC, KXRD KXRE, KXRF | KXRG, KXRH KXRJ, KXRK | KXRL, KXRM KXTC | KXPB, KXTD

Letter Height For Standard Legends

Reference	in	mm
KXN100	1⁄4	6
KXN200	3⁄16	4.75
KXN300	3⁄16	4.75
KXN400	3⁄16	4.75
KXN500	3⁄16	4.75
KXN600	1⁄8	3
KXN700	1⁄8	3

Maximum Number of Lines and Characters For 9001KXN Legend Inserts

Letter Height in	Letter Height mm	Number of to	KXN199	KXN299 Horizontal	KXN299 Vertical	KXN399	KXN499	KXN599
1⁄4	6	Characters per Line	7	7	3	7	7	3
		Lines per Legend Insert	4	2	4	1	1	1
3⁄16	4.75	Characters per Line	9	9	4	9	9	4
		Lines per Legend Insert	5	2	6	2	1	2
1⁄8	3	Characters per Line	14	14	5	14	14	6
		Lines per Legend Insert	8	4	9	3	2	3

Maximum Number of Lines and Characters for 9001KXN699 and 9001KXN799 Legend Plates

Position	Letter Height in	Letter Height mm	Characters Per Marking Area A and C	Characters Per Marking Area B
	3⁄16	4.75	6	6
	1⁄8	3	8	9
	3⁄16	4.75	10	5
	1⁄8	3	13	7

All 9001KX push buttons and pilot lights have a blank insert as standard. These blank inserts can be custom marked using a marking pen, a mechanical lettering set, press letters, or a tape lettering machine that marks a tape which can then be transferred to the blank insert.

To have legend inserts installed into the operators, order the operator as normal and then indicate where to install the legend inserts using the numbered positions shown on the operator ordered.

Example: 9001KXRL1GRGRH2 with a
9001KXN 401 in position 1
9001KXN 503 in position 2
9001KXN 504 in position 3
9001KXN 402 in position 4

Product range: page 66
Specifications: page 67
Dimensions: page 76

Schneider Electric

Harmony™ 9001K/SK/KX 30 mm push buttons

9001KX – Accessories

Note: When ordering, add prefix "9001" to the reference.

Closing Plate

Reference
KXAK52

UL Types 4, 13/NEMA 4, 13
Square Closing Plate (Chrome Plated)
Same size as KX bezel

Boots

For Use On	Reference
All KX** push buttons and pilot lights	**KXAKU7**
All KX** selector switches and potentiometers	**KXAKU17B**

Shrouds

Description	For Use On	Color	Reference
Full Shroud	All push buttons and pilot lights	Red	**KXAK41R**
		Black	**KXAK41B**
Short Shroud	Any KX operator	Red	**KXAK40R**
		Black	**KXAK40B**

Lamp and Lens Removal Kit

Reference
KXALLRT

Used to remove lamp and lens on all illuminated operators and pilot lights.

Button Covers

Description	For Use On	Color	Reference	Code
Includes 2-KXN200	KXPB KXTD	Red Green Amber Blue White	**KXAC28** *(1)* **KXAC28** *(1)* **KXAC28** *(1)* **KXAC28** *(1)* **KXAC28** *(1)*	R *(2)* G *(2)* A *(2)* L *(2)* W *(2)*
Includes KXN400	KXTC (Position 1 & 4)	Red Green Amber Blue White	**KXAR4** **KXAG4** **KXAA4** **KXAL4** **KXAW4**	R G A L W
Includes KXN500	KXTC (Position 2 & 3)	Red Green Amber Blue White	**KXAR5** **KXAG5** **KXAA5** **KXAL5** **KXAW5**	R G A L W
Includes 1–KXN100	KXPC	Red Green Amber Blue White	**KXAC48** *(3)* **KXAC48** *(3)* **KXAC48** *(3)* **KXAC48** *(3)* **KXAC48** *(3)*	R *(4)* G *(4)* A *(4)* L *(4)* W *(4)*
Includes KXN100	KXRA KXRB	Red Green Amber Blue White	**KXAR1** **KXAG1** **KXAA1** **KXAL1** **KXAW1**	R G A L W
Includes KXN100	KXRN KXRP	Red Green Amber Blue White	**KXARM1** **KXAGM1** **KXAAM1** **KXALM1** **KXAWM1**	R G A L W
(5) Includes KXN200	KXRC KXRD KXRE KXRF	Red Green Amber Blue White	**KXAR2** **KXAG2** **KXAA2** **KXAL2** **KXAW2**	R G A L W
Includes KXN300	KXRG (Position 2) KXRH (Position 2) KXRJ (Position 2) KXRK (Position 2)	Red Green Amber Blue White	**KXAR3** **KXAG3** **KXAA3** **KXAL3** **KXAW3**	R G A L W
Includes KXN400	KXRG (Position 1 & 3) KXRH (Position 1 & 3) KXRJ (Position 1 & 3) KXRK (Position 1 & 3) KXRL (Position 1 & 4) KXRM (Position 1 & 4)	Red Green Amber Blue White	**KXAR4** **KXAG4** **KXAA4** **KXAL4** **KXAW4**	R G A L W
Includes KXN500	KXRL (Position 2 & 3) KXRM (Position 2 & 3)	Red Green Amber Blue White	**KXAR5** **KXAG5** **KXAA5** **KXAL5** **KXAW5**	R G A L W
Includes KXN100	KXPA	Red Green Amber Blue White	**KXAR8** **KXAG8** **KXAA8** **KXAL8** **KXAW8**	R G A L W
Includes KXN100	KXTA KXTB	Red Green Amber Blue White	**KXAR1** **KXAG1** **KXAA1** **KXAL1** **KXAW1**	R G A L W

(1) Each KXAC28 includes a clear cover and 1 each of all colors. If the same color is required for position #1and #2 of the KXPB operator, order 2 of reference KXAC28.
(2) When specifying color codes—the first will be installed in #1 and the second in #2.
(3) Each KXAC48 includes a clear cover and 1 each of all colors. If the same color is required for position #1and #2 of the KXPC operator, order 2 of reference KXAC48.
(4) When specifying color codes—the first will be installed in #1, the second in #2, the third in #3 and the fourth in #4.
(5) Two required per operator. When ordering an assembled operator—specify two code numbers.The first code will be assembled into #1 and the second code will be assembled into #2.

Product range: page 66
Specifications: page 67
Dimensions: page 76

Harmony™ 9001K/SK/KX 30 mm push buttons

9001KX

Dimensions

Single Push Button Operator, Non-Illuminated

9001KXRA, 9001KXRN

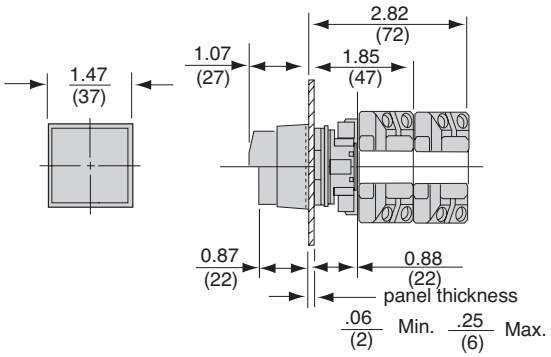

Selector Switch Operator, Non-Illuminated

9001KXS●

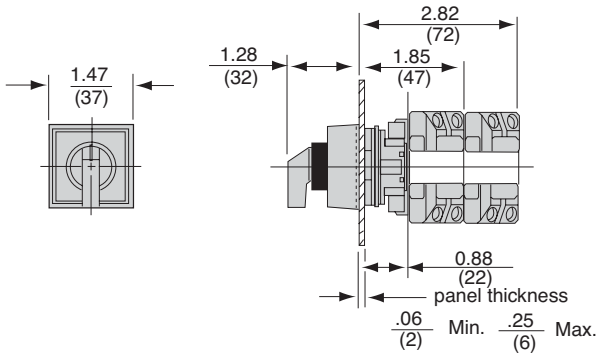

Single Pilot Light

9001KXPA35●, 9001KXPA1●

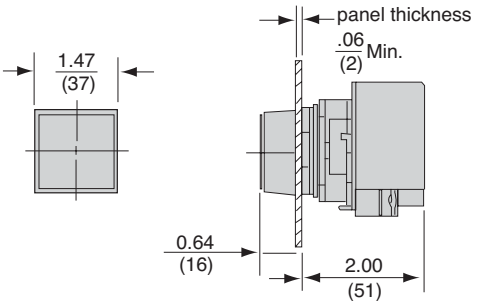

Dual Push Button Operator, Non-Illuminated

9001KXRC, 9001KXRD, 9001KXRE, 9001KXRF

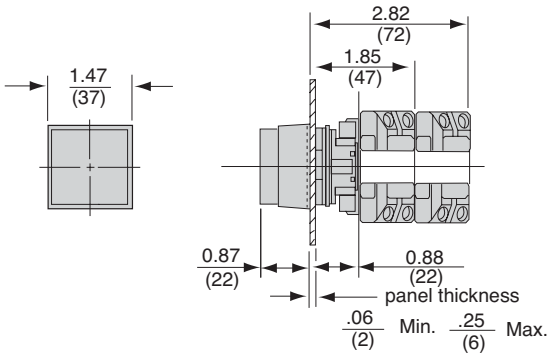

Key Operator Selector Switch

9001KXS●

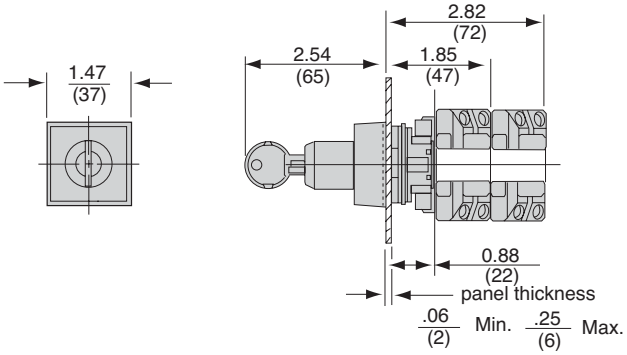

Dual Lamp Pilot Light

9001KXPB34●●, 9001KXPB1●●

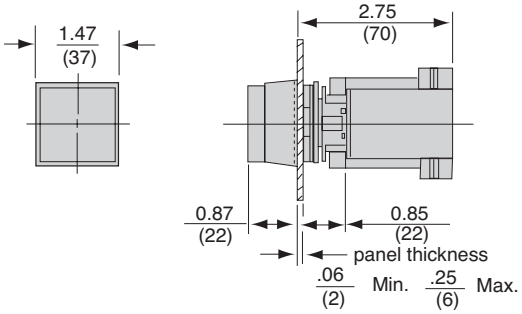

Single Push Button Operator, Illuminated

9001KXRB, 9001KXRP, 9001KXTA

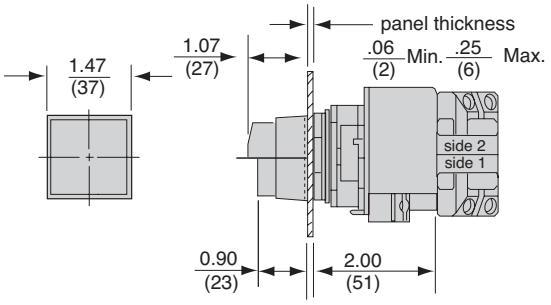

Selector Switch Operator, Illuminated

9001KXS●

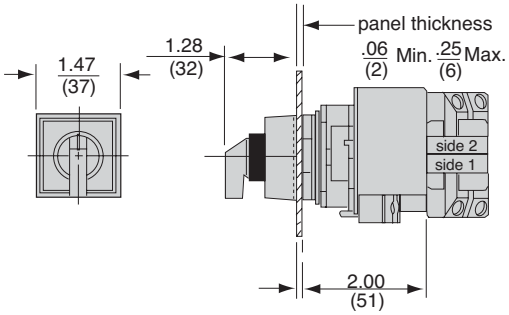

Dual Dimensions: in (mm)

Minimum Centerline Spacings For 9001KX
2-1/4" Vertically 1-5/8" Horizontally

Product range: page 66
Specifications: page 67
References: page 70

Schneider Electric

Dimensions *(continued)*

Quad Pilot Light
9001KXPC34WAGR, 9001KXPC1W●GR

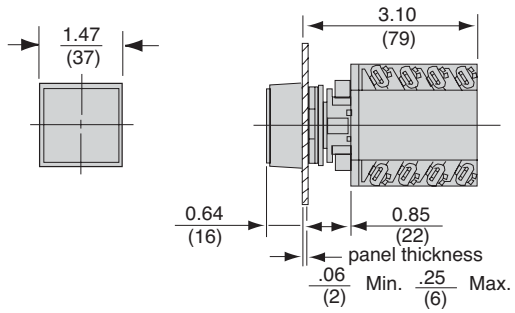

Dual Push Button Operator, Illuminated
9001KXRG, 9001KXRH, 9001KXRJ, 9001KXRX

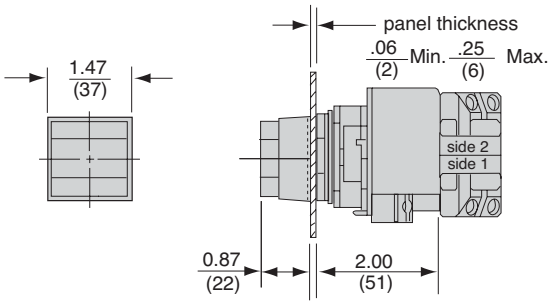

Single Potentiometer Operator
9001KXRBB●●

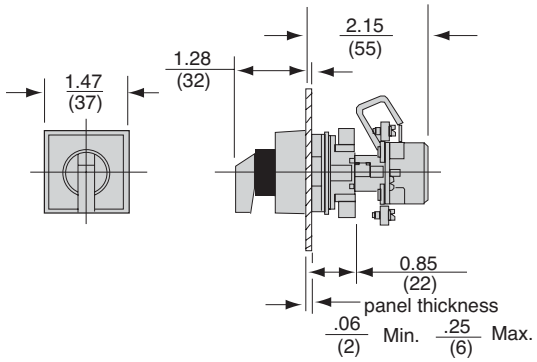

Tandem Potentiometer Operator
9001KXBD83

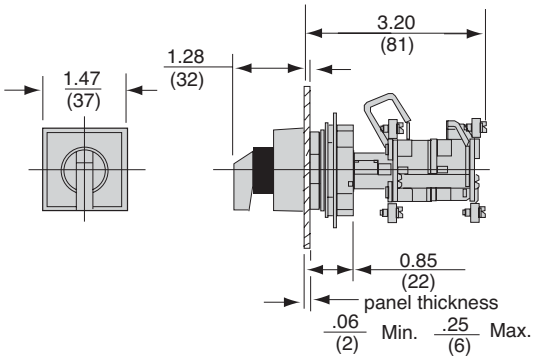

Dual Lamp Push Button Operator
9001KXRL, 9001KXRM, 9001KXTC

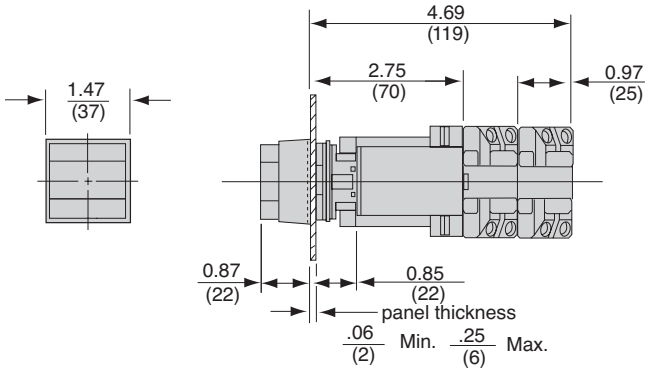

Shroud
9001KXAK41R, 9001KXAK41B, 9001KXAK40R, 9001KXAK40B

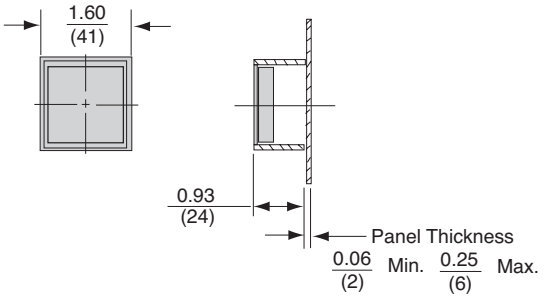

Boot
9001KXAKU7, 9001KXAKU17B

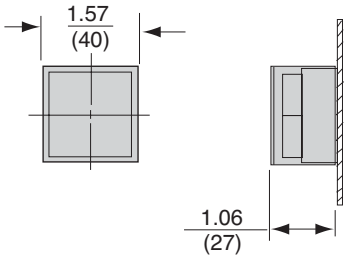

Dual Dimensions: in (mm)

Minimum Centerline Spacings For 9001KX
2-1/4" Vertically 1-5/8" Horizontally

Product range:
page 66

Specifications:
page 67

References:
page 70

Harmony™ 9001K/SK/KX 30 mm push buttons

#	
2540902240	*19*
2550101002	*24, 54*
2550101003	*29, 59*
2550101013	*24, 54*
2550101020	*24, 29, 54, 59*
2550101025	*24, 54*
2550101027	*24, 54*
2550101036	*24, 54*
2550101037	*24, 54*
2550105003	*29, 59*
2550105004	*29, 59*
2550105005	*29, 59*
2550105007	*29, 59*
2550105008	*29, 59*
2550105009	*29, 59*
2550105010	*29, 59*
2550105014	*29, 59*
2941101100	*29, 59*
3105204101	*29, 59*
3105205901	*29, 59*
3105206750	*19*
3105211101	*19*
3105217001	*29, 59*
3105404408	*29, 59*
3105406401	*29, 59*
4458D20X3	*29, 59*
4487D63XI	*29, 59*
6508804101	*29, 59*
6508805201	*24, 54*
6508805202	*24, 54*
6508805203	*24, 54*
6508805204	*24, 54*
6508805205	*24, 54*
6508805206	*24, 54*
6508805210	*24, 54*
6508805211	*24, 54*
6508805212	*24, 54*
6508805213	*24, 54*
6508805214	*24, 54*
6509701801	*29, 59*
6509701901	*29, 59*
6509702001	*29, 59*
6509704401	*59*
6509704901	*29, 59*
6509705001	*29, 59*
6512231201	*29, 59*
6512232801	*19*
6512240601	*59*
6512243201	*29, 59*
6515802701	*29*
9001K40	*19*
9001K57	*19*
A	
A20	*28, 58*
A21	*28, 58*
A22	*28, 58*
A24	*28, 58*
A31	*28, 58*
A6	*28, 58*
A7	*28, 58*
A8	*28, 58*
A9	*28, 58*
B	
B11	*28, 58*
B19	*28, 58*
B23	*28, 58*
B25	*28, 58*
C	
C20	*28, 58*
C21	*28, 58*
C22	*28, 58*
C24	*28, 58*
C31	*28, 58*
C6	*28, 58*
C7	*28, 58*
C8	*28, 58*
C9	*28, 58*
G	
G19	*28, 58*
G20	*28, 58*
G21	*28, 58*
G22	*28, 58*
G24	*28, 58*
G31	*28, 58*
G6	*28, 58*
G7	*28, 58*
G8	*28, 58*
G9	*28, 58*
K	
K1	*29, 59*
K107	*27, 57*
K108	*27, 57*
K109	*27, 57*
K110	*27, 57*
K111	*29*
K11J●●	*13*
K11J1	*13*
K11J1R	*13*
K12J●●	*13*
K12J1	*13*
K12J1R	*13*
K13B	*28, 58*
K13C	*28, 58*
K13D	*28, 58*
K13E	*28, 58*
K13F	*28, 58*
K13G	*28, 58*
K13H	*28, 58*
K13J	*28, 58*
K13L	*28, 58*
K13M	*28, 58*
K15	*19*
K162	*27, 57*
K16B	*28, 58*
K16G	*28, 58*
K16L	*28, 58*
K16R	*28, 58*
K16R05	*28, 58*
K16S	*28, 58*
K16Y	*28, 58*
K17B	*28, 58*
K17G	*28, 58*
K17L	*28, 58*
K17R	*28, 58*
K17R05	*28, 58*
K17S	*28, 58*
K17Y	*28, 58*
K1L	*21*
K1L●●	*11*
K1L●GH13	*11*
K1L●RH13	*11*
K1L1●	*11*
K1L1GH13	*11*
K1L1RH13	*11*
K1L35●	*11*
K1L35GH13	*11*
K1L35RH13	*11*
K1L7●	*11*
K1L7GH13	*11*
K1L7RH13	*11*
K25J●●	*13*
K25J1	*13*
K25J1R	*13*
K2L	*21*
K2L●●	*11*
K2L●G20H13	*11*
K2L●G21H13	*11*
K2L●GH13	*11*
K2L●R20H13	*11*
K2L●R21H13	*11*
K2L●RH13	*11*
K2L1●	*11*
K2L1G20H13	*11*
K2L1G21H13	*11*
K2L1GH13	*11*
K2L1R20H13	*11*
K2L1R21H13	*11*
K2L1RH13	*11*
K2L35●	*11*
K2L35G20H13	*11*
K2L35G21H13	*11*
K2L35GH13	*11*
K2L35R20H13	*11*
K2L35R21H13	*11*
K2L35RH13	*11*
K2L7●	*11*
K2L7G20H13	*11*
K2L7G21H13	*11*
K2L7GH13	*11*
K2L7R20H13	*11*
K2L7R21H13	*11*
K2L7RH13	*11*
K3	*29, 59*
K30	*18*
K30H8	*18*
K31	*18*
K31H8	*18*
K32	*18*
K32H8	*18*
K33	*18*
K33H8	*18*
K34	*18*
K34H2	*18*
K34J●●	*13*
K34J1	*13*
K34J1R	*13*
K35	*18*
K35H2	*18*
K36	*18*
K36H2	*18*
K37	*18*
K37H2	*18*
K3L	*21*
K3L●●	*11*
K3L●GH13	*11*
K3L●RH13	*11*
K3L1●	*11*
K3L1GH13	*11*
K3L1RH13	*11*
K3L35●	*11*
K3L35GH13	*11*
K3L35RH13	*11*
K3L7●	*11*
K3L7GH13	*11*
K3L7RH13	*11*
K4	*27, 57*
K40	*29*
K401J●●	*14*
K401J1	*14*
K401J1R	*14*
K402J●●	*14*
K402J1	*14*
K402J1R	*14*
K41	*29*
K42	*29*
K42J●●	*14*
K42J1	*14*
K42J1R	*14*
K43J1	*14*
K43J1R	*14*
K44	*29*
K44J●●	*14*
K44J1	*14*
K44J1R	*14*
K45	*29*
K45J●●	*14*
K45J1	*14*
K45J1R	*14*
K46	*29*
K46J●●	*14*
K46J1	*14*
K46J1R	*14*
K47	*29*
K47J●●	*14*
K47J1	*14*
K47J1R	*14*
K48	*27, 57*
K49	*29*
K49J●●	*14*
K49J1	*14*
K49J1R	*14*
K5	*27, 57*
K50	*19*
K501J●●	*14*
K501J1	*14*
K501J1R	*14*
K502J●●	*14*
K502J1	*14*
K502J1R	*14*
K51	*27, 57*
K52	*27, 57*
K52J●●	*14*
K52J1	*14*
K52J1R	*14*
K53J●●	*14*
K53J1	*14*
K53J1R	*14*
K54	*29, 59*
K54J●●	*14*
K54J1	*14*
K54J1R	*14*
K55	*29*
K55J●●	*14*
K55J1	*14*
K55J1R	*14*
K56●	*27, 57*
K56●M	*27, 57*
K56J●●	*14*
K56J1	*14*
K56J1R	*14*
K57J●●	*14*
K57J1	*14*
K57J1R	*14*
K58	*29*
K59J●●	*14*
K59J1	*14*
K59J1R	*14*
K6	*27, 57*
K60	*27, 57*
K601J●●	*14*
K601J1	*14*
K601J1R	*14*
K602J●●	*14*
K602J1	*14*
K602J1R	*14*
K62	*27, 57*
K62J●●	*14*
K62J1R	*14*
K63J1	*14*
K63J1R	*14*
K64J●●	*14*
K64J1	*14*
K64J1R	*14*
K65J●●	*14*
K65J1	*14*
K65J1R	*14*
K66J●●	*14*
K66J1	*14*
K66J1R	*14*
K67J●●	*14*
K67J1	*14*
K67J1R	*14*
K68	*27*
K685	*27*
K69	*29, 59*
K69J●●	*14*
K69J1	*14*
K69J1R	*14*
K7	*27, 57*
K70	*18*
K701J●●	*14*
K701J1	*14*
K701J1R	*14*
K702J●●	*14*
K702J1	*14*
K702J1R	*14*
K70H7	*18*
K71	*18*
K71H7	*18*
K72	*18*
K72H7	*18*
K72J●●	*14*
K72J1	*14*
K72J1R	*14*
K73	*18*
K73H7	*18*
K73J1	*14*
K73J1R	*14*
K74J●●	*14*
K74J1	*14*
K74J1R	*14*
K75J●●	*14*
K75J1	*14*
K75J1R	*14*
K76J●●	*14*
K76J1	*14*
K76J1R	*14*
K77J●●	*14*
K77J1	*14*
K77J1R	*14*
K79J●●	*14*
K79J1	*14*
K79J1R	*14*
K8	*19*
K85	*19*
K92B	*28, 58*
K92BM	*28, 58*
K92G	*28, 58*
K92GM	*28, 58*
K92L	*28, 58*
K92R	*28, 58*
K92RM	*28, 58*
K92S	*28, 58*
K92Y	*28, 58*
K93B	*28, 58*
K93BM	*28, 58*
K93G	*28, 58*
K93GM	*28, 58*
K93L	*28, 58*
K93R	*28, 58*
K93RM	*28, 58*
K93S	*28, 58*
K93Y	*28, 58*
K94BM	*28, 58*
K94GM	*28, 58*
K94RM	*28, 58*
K95	*29, 59*
K95BM	*28, 58*
K95GM	*28, 58*
K95RM	*28, 58*
K96	*27, 57*
K97	*27, 57*
KA1	*20, 50, 72*
KA12	*20, 50*
KA13	*20, 50*
KA1G	*20, 50*
KA2	*20, 50, 72*
KA21	*20, 50*
KA22	*20, 50*
KA23	*20, 50*
KA24	*20, 50*
KA25	*20, 50*
KA2G	*20, 50*
KA3	*20, 50, 72*
KA31	*20, 50*
KA32	*20, 50*
KA33	*20, 50*
KA34	*20, 50*
KA35	*20, 50*

Harmony™ 9001K/SK/KX 30 mm push buttons

KA3G	*20, 50*
KA4	*20, 50, 72*
KA41	*23, 53*
KA42	*23, 53*
KA43	*23, 53*
KA44	*23, 53*
KA45	*23, 53*
KA4G	*20, 50*
KA5	*20, 50, 72*
KA51	*23, 53*
KA52	*23, 53*
KA53	*23, 53*
KA54	*23, 53*
KA55	*23, 53*
KA5G	*20, 50*
KA6	*20, 50, 72*
KA6G	*20, 50*
KM1	*24, 54*
KM11	*24, 54*
KM12	*24, 54*
KM14	*24, 54*
KM1LG	*24, 54*
KM1LR	*24, 54*
KM1LY	*24, 54*
KM25	*24, 54*
KM3	*24, 54*
KM31	*24, 54*
KM31LG	*24, 54*
KM31LR	*24, 54*
KM31LY	*24, 54*
KM32	*24, 54*
KM32LG	*24, 54*
KM32LR	*24, 54*
KM32LY	*24, 54*
KM33	*24, 54*
KM35	*24, 54*
KM35LG	*24, 54*
KM35LL	*24, 54*
KM35LR	*24, 54*
KM35LW	*24, 54*
KM35LY	*24, 54*
KM36	*24, 54*
KM38	*24, 54*
KM38LG	*24, 54*
KM38LL	*24, 54*
KM38LR	*24, 54*
KM38LW	*24, 54*
KM38LY	*24, 54*
KM3LG	*24, 54*
KM3LR	*24, 54*
KM3LY	*24, 54*
KM40	*24, 54*
KM5	*24, 54*
KM55	*24, 54*
KM55LG	*24, 54*
KM55LR	*24, 54*
KM55LY	*24, 54*
KM58	*24, 54*
KM58LG	*24, 54*
KM58LR	*24, 54*
KM58LY	*24, 54*
KM6	*24, 54*
KM7	*24, 54*
KM7LG	*24, 54*
KM7LR	*24, 54*
KM7LY	*24, 54*
KM8	*24, 54*
KMF1	*24, 54*
KN100AP	*26, 56*
KN100BP	*25, 55*
KN100CP	*26, 56*
KN100GP	*26, 56*
KN100HP	*26, 56*
KN100LP	*26, 56*
KN100RP	*25, 55*
KN100SP	*25, 55*
KN100WP	*25, 55*
KN100YP	*26, 56*
KN101BP	*25, 55*
KN101SP	*25, 55*
KN101WP	*25, 55*
KN102RP	*25, 55*
KN103BP	*25, 55*
KN103SP	*25, 55*
KN103WP	*25, 55*
KN104RP	*25, 55*
KN105RP	*25, 55*
KN106BP	*25, 55*
KN106SP	*25, 55*
KN106WP	*25, 55*
KN107BP	*25, 55*
KN107SP	*25, 55*
KN107WP	*25, 55*
KN108BP	*25, 55*
KN108SP	*25, 55*
KN108WP	*25, 55*
KN109BP	*25, 55*
KN109SP	*25, 55*
KN109WP	*25, 55*
KN110BP	*25, 55*
KN110SP	*25, 55*
KN110WP	*25, 55*
KN111BP	*25, 55*
KN111SP	*25, 55*
KN111WP	*25, 55*
KN112BP	*25, 55*
KN112SP	*25, 55*
KN112WP	*25, 55*
KN113BP	*25, 55*
KN113SP	*25, 55*
KN113WP	*25, 55*
KN114BP	*25, 55*
KN114SP	*25, 55*
KN114WP	*25, 55*
KN115BP	*25, 55*
KN115SP	*25, 55*
KN115WP	*25, 55*
KN116BP	*25, 55*
KN116SP	*25, 55*
KN116WP	*25, 55*
KN117BP	*25, 55*
KN117SP	*25, 55*
KN117WP	*25, 55*
KN118BP	*25, 55*
KN118SP	*25, 55*
KN118WP	*25, 55*
KN119BP	*25, 55*
KN119SP	*25, 55*
KN119WP	*25, 55*
KN120BP	*25, 55*
KN120SP	*25, 55*
KN120WP	*25, 55*
KN121BP	*25, 55*
KN121SP	*25, 55*
KN121WP	*25, 55*
KN122BP	*25, 55*
KN122SP	*25, 55*
KN122WP	*25, 55*
KN123BP	*25, 55*
KN123SP	*25, 55*
KN123WP	*25, 55*
KN124BP	*25, 55*
KN124SP	*25, 55*
KN124WP	*25, 55*
KN125BP	*25, 55*
KN125SP	*25, 55*
KN125WP	*25, 55*
KN126BP	*25, 55*
KN126SP	*25, 55*
KN126WP	*25, 55*
KN127BP	*25, 55*
KN127SP	*25, 55*
KN127WP	*25, 55*
KN128BP	*25, 55*
KN128SP	*25, 55*
KN128WP	*25, 55*
KN129BP	*25, 55*
KN129SP	*25, 55*
KN129WP	*25, 55*
KN130BP	*25, 55*
KN130SP	*25, 55*
KN130WP	*25, 55*
KN131BP	*25, 55*
KN131SP	*25, 55*
KN131WP	*25, 55*
KN132BP	*25, 55*
KN132SP	*25, 55*
KN132WP	*25, 55*
KN133BP	*25, 55*
KN133SP	*25, 55*
KN133WP	*25, 55*
KN134BP	*25, 55*
KN134SP	*25, 55*
KN134WP	*25, 55*
KN136BP	*25, 55*
KN136SP	*25, 55*
KN136WP	*25, 55*
KN137BP	*25, 55*
KN137SP	*25, 55*
KN137WP	*25, 55*
KN138BP	*25, 55*
KN138SP	*25, 55*
KN138WP	*25, 55*
KN139BP	*25, 55*
KN139SP	*25, 55*
KN139WP	*25, 55*
KN140BP	*25, 55*
KN140SP	*25, 55*
KN140WP	*25, 55*
KN141BP	*25, 55*
KN141SP	*25, 55*
KN141WP	*25, 55*
KN142BP	*25, 55*
KN142SP	*25, 55*
KN142WP	*25, 55*
KN143BP	*25, 55*
KN143SP	*25, 55*
KN143WP	*25, 55*
KN144BP	*25, 55*
KN144SP	*25, 55*
KN144WP	*25, 55*
KN145BP	*25, 55*
KN145SP	*25, 55*
KN145WP	*25, 55*
KN146BP	*25, 55*
KN146SP	*25, 55*
KN146WP	*25, 55*
KN147BP	*25, 55*
KN147SP	*25, 55*
KN147WP	*25, 55*
KN148BP	*25, 55*
KN148SP	*25, 55*
KN148WP	*25, 55*
KN150BP	*25, 55*
KN150SP	*25, 55*
KN150WP	*25, 55*
KN151BP	*25, 55*
KN151SP	*25, 55*
KN151WP	*25, 55*
KN153BP	*25, 55*
KN153SP	*25, 55*
KN153WP	*25, 55*
KN154BP	*25, 55*
KN154SP	*25, 55*
KN154WP	*25, 55*
KN155BP	*25, 55*
KN155SP	*25, 55*
KN155WP	*25, 55*
KN156BP	*25, 55*
KN156SP	*25, 55*
KN156WP	*25, 55*
KN158BP	*25, 55*
KN158SP	*25, 55*
KN158WP	*25, 55*
KN159BP	*25, 55*
KN159SP	*25, 55*
KN159WP	*25, 55*
KN160BP	*25, 55*
KN160SP	*25, 55*
KN160WP	*25, 55*
KN162BP	*25, 55*
KN162SP	*25, 55*
KN162WP	*25, 55*
KN163BP	*25, 55*
KN163SP	*25, 55*
KN163WP	*25, 55*
KN164BP	*25, 55*
KN164SP	*25, 55*
KN164WP	*25, 55*
KN165BP	*25, 55*
KN165SP	*25, 55*
KN165WP	*25, 55*
KN167BP	*25, 55*
KN167SP	*25, 55*
KN167WP	*25, 55*
KN170BP	*25, 55*
KN170SP	*25, 55*
KN170WP	*25, 55*
KN176BP	*25, 55*
KN176SP	*25, 55*
KN176WP	*25, 55*
KN177BP	*25*
KN177SP	*25, 55*
KN177WP	*25, 55*
KN178BP	*25*
KN178SP	*25*
KN178WP	*25*
KN179BP	*25, 55*
KN179SP	*25, 55*
KN179WP	*25, 55*
KN199AP	*26, 56*
KN199BP	*26, 56*
KN199CP	*26, 56*
KN199GP	*26, 56*
KN199HP	*26, 56*
KN199LP	*26, 56*
KN199RP	*26, 56*
KN199SP	*26, 56*
KN199WP	*26, 56*
KN199YP	*26, 56*
KN2	*21, 26, 51, 56*
KN200	*25, 55*
KN200AP	*26, 56*
KN200BP	*25, 55*
KN200CP	*26, 56*
KN200GP	*26, 56*
KN200HP	*26, 56*
KN200LP	*26, 56*
KN200R	*25, 55*
KN200RP	*25, 55*
KN200SP	*25, 55*
KN200WP	*25, 55*
KN200YP	*26, 56*
KN201	*25, 55*
KN201BP	*25, 55*
KN201SP	*25, 55*
KN201WP	*25, 55*
KN202	*25, 55*
KN202RP	*25, 55*
KN203	*25, 55*
KN203BP	*25, 55*
KN203SP	*25, 55*
KN203WP	*25, 55*
KN204	*25, 55*
KN204RP	*25, 55*
KN205	*25, 55*
KN205RP	*25, 55*
KN206	*25, 55*
KN206BP	*25, 55*
KN206SP	*25, 55*
KN206WP	*25, 55*
KN207	*25, 55*
KN207BP	*25, 55*
KN207SP	*25, 55*
KN207WP	*25, 55*
KN208	*25, 55*
KN208BP	*25, 55*
KN208SP	*25, 55*
KN208WP	*25, 55*
KN209	*25, 55*
KN209BP	*25, 55*
KN209SP	*25, 55*
KN209WP	*25, 55*
KN210	*25, 55*
KN210BP	*25, 55*
KN210SP	*25, 55*
KN210WP	*25, 55*
KN211	*25, 55*
KN211BP	*25, 55*
KN211SP	*25, 55*
KN211WP	*25, 55*
KN212	*25, 55*
KN212BP	*25, 55*
KN212SP	*25, 55*
KN212WP	*25, 55*
KN213	*25, 55*
KN213BP	*25, 55*
KN213SP	*25, 55*
KN213WP	*25, 55*
KN214	*25, 55*
KN214BP	*25, 55*
KN214SP	*25, 55*
KN214WP	*25, 55*
KN215	*25, 55*
KN215BP	*25, 55*
KN215SP	*25, 55*
KN215WP	*25, 55*
KN216	*25, 55*
KN216BP	*25, 55*
KN216SP	*25, 55*
KN216WP	*25, 55*
KN217	*25, 55*
KN217BP	*25, 55*
KN217SP	*25, 55*
KN217WP	*25, 55*
KN218	*25, 55*
KN218BP	*25, 55*
KN218SP	*25, 55*
KN218WP	*25, 55*
KN219	*25, 55*
KN219BP	*25, 55*
KN219SP	*25, 55*
KN219WP	*25, 55*
KN220	*25, 55*
KN220BP	*25, 55*
KN220SP	*25, 55*
KN220WP	*25, 55*
KN221	*25, 55*
KN221BP	*25, 55*
KN221SP	*25, 55*
KN221WP	*25, 55*
KN222	*25, 55*
KN222BP	*25, 55*
KN222SP	*25, 55*
KN222WP	*25, 55*
KN223	*25, 55*
KN223BP	*25, 55*
KN223SP	*25, 55*
KN223WP	*25, 55*
KN224	*25, 55*
KN224BP	*25, 55*
KN224SP	*25, 55*
KN224WP	*25, 55*
KN225	*25, 55*
KN225BP	*25, 55*
KN225SP	*25, 55*
KN225WP	*25, 55*
KN226	*25, 55*
KN226BP	*25, 55*
KN226SP	*25, 55*

KN226WP	*25, 55*
KN227	*25, 55*
KN227BP	*25, 55*
KN227SP	*25, 55*
KN227WP	*25, 55*
KN228	*25, 55*
KN228BP	*25, 55*
KN228SP	*25, 55*
KN228WP	*25, 55*
KN229	*25, 55*
KN229BP	*25, 55*
KN229SP	*25, 55*
KN229WP	*25, 55*
KN230	*25, 55*
KN230BP	*25, 55*
KN230SP	*25, 55*
KN230WP	*25, 55*
KN231	*25, 55*
KN231BP	*25, 55*
KN231SP	*25, 55*
KN231WP	*25, 55*
KN232	*25, 55*
KN232BP	*25, 55*
KN232SP	*25, 55*
KN232WP	*25, 55*
KN233	*25, 55*
KN233BP	*25, 55*
KN233SP	*25, 55*
KN233WP	*25, 55*
KN234	*25, 55*
KN234BP	*25, 55*
KN234SP	*25, 55*
KN234WP	*25, 55*
KN236	*25, 55*
KN236BP	*25, 55*
KN236SP	*25, 55*
KN236WP	*25, 55*
KN237	*25, 55*
KN237BP	*25, 55*
KN237SP	*25, 55*
KN237WP	*25, 55*
KN238	*25, 55*
KN238BP	*25, 55*
KN238SP	*25, 55*
KN238WP	*25, 55*
KN239	*25, 55*
KN239BP	*25, 55*
KN239SP	*25, 55*
KN239WP	*25, 55*
KN240	*25, 55*
KN240BP	*25, 55*
KN240SP	*25, 55*
KN240WP	*25, 55*
KN241	*25, 55*
KN241BP	*25, 55*
KN241SP	*25, 55*
KN241WP	*25, 55*
KN242	*25, 55*
KN242BP	*25, 55*
KN242SP	*25, 55*
KN242WP	*25, 55*
KN243	*25, 55*
KN243BP	*25, 55*
KN243SP	*25, 55*
KN243WP	*25, 55*
KN244	*25, 55*
KN244BP	*25, 55*
KN244SP	*25, 55*
KN244WP	*25, 55*
KN245	*25, 55*
KN245BP	*25, 55*
KN245SP	*25, 55*
KN245WP	*25, 55*
KN246	*25, 55*
KN246BP	*25, 55*
KN246SP	*25, 55*
KN246WP	*25, 55*
KN247	*25, 55*
KN247BP	*25, 55*
KN247SP	*25, 55*
KN247WP	*25, 55*
KN248	*25, 55*
KN248BP	*25, 55*
KN248SP	*25, 55*
KN248WP	*25, 55*
KN250	*25, 55*
KN250BP	*25, 55*
KN250SP	*25, 55*
KN250WP	*25, 55*
KN251	*25, 55*
KN251BP	*25, 55*
KN251SP	*25, 55*
KN251WP	*25, 55*
KN253	*25, 55*
KN253BP	*25, 55*
KN253SP	*25, 55*
KN253WP	*25, 55*
KN254	*25, 55*
KN254BP	*25, 55*
KN254SP	*25, 55*
KN254WP	*25, 55*
KN255	*25, 55*
KN255BP	*25, 55*
KN255SP	*25, 55*
KN255WP	*25, 55*
KN256	*25, 55*
KN256BP	*25, 55*
KN256SP	*25, 55*
KN256WP	*25, 55*
KN258	*25, 55*
KN258BP	*25, 55*
KN258SP	*25, 55*
KN258WP	*25, 55*
KN259	*25, 55*
KN259BP	*25, 55*
KN259SP	*25, 55*
KN259WP	*25, 55*
KN260	*25, 55*
KN260BP	*25, 55*
KN260SP	*25, 55*
KN260WP	*25, 55*
KN262	*25, 55*
KN262BP	*25, 55*
KN262SP	*25, 55*
KN262WP	*25, 55*
KN263	*25, 55*
KN263BP	*25, 55*
KN263SP	*25, 55*
KN263WP	*25, 55*
KN264	*25, 55*
KN264BP	*25, 55*
KN264SP	*25, 55*
KN264WP	*25, 55*
KN265	*25, 55*
KN265BP	*25, 55*
KN265SP	*25, 55*
KN265WP	*25, 55*
KN267	*25, 55*
KN267BP	*25, 55*
KN267SP	*25, 55*
KN267WP	*25, 55*
KN270	*25, 55*
KN270BP	*25, 55*
KN270SP	*25, 55*
KN270WP	*25, 55*
KN276	*25, 55*
KN276BP	*25, 55*
KN276SP	*25, 55*
KN276WP	*25, 55*
KN277	*25*
KN277BP	*55*
KN277SP	*55*
KN277WP	*55*
KN278BP	*25*
KN278SP	*25*
KN278WP	*25*
KN299	*26, 56*
KN299AP	*26, 56*
KN299BP	*26, 56*
KN299CP	*26, 56*
KN299GP	*26, 56*
KN299HP	*26, 56*
KN299LP	*26, 56*
KN299R	*26, 56*
KN299RP	*26, 56*
KN299SP	*26, 56*
KN299WP	*26, 56*
KN299YP	*26, 56*
KN3	*21, 26, 51, 56*
KN300	*25, 55*
KN300R	*25, 55*
KN301	*25, 55*
KN302	*25, 55*
KN303	*25, 55*
KN304	*25, 55*
KN305	*25, 55*
KN306	*25, 55*
KN307	*25, 55*
KN308	*25, 55*
KN309	*25, 55*
KN310	*25, 55*
KN311	*25, 55*
KN312	*25, 55*
KN313	*25, 55*
KN314	*25, 55*
KN315	*25, 55*
KN316	*25, 55*
KN317	*25, 55*
KN318	*25, 55*
KN319	*25, 55*
KN320	*25, 55*
KN321	*25, 55*
KN322	*25, 55*
KN323	*25, 55*
KN324	*25, 55*
KN325	*25, 55*
KN326	*25, 55*
KN327	*25, 55*
KN328	*25, 55*
KN329	*25, 55*
KN330	*25, 55*
KN331	*25, 55*
KN332	*25, 55*
KN333	*25, 55*
KN334	*25, 55*
KN336	*25, 55*
KN337	*25, 55*
KN338	*25, 55*
KN339	*25, 55*
KN340	*25, 55*
KN341	*25, 55*
KN342	*25, 55*
KN343	*25, 55*
KN344	*25, 55*
KN345	*25, 55*
KN346	*25, 55*
KN347	*25, 55*
KN348	*25, 55*
KN350	*25, 55*
KN351	*25, 55*
KN353	*25, 55*
KN354	*25, 55*
KN355	*25, 55*
KN356	*25, 55*
KN358	*25, 55*
KN359	*25, 55*
KN360	*25, 55*
KN362	*25, 55*
KN363	*25, 55*
KN364	*25, 55*
KN365	*25, 55*
KN367	*25, 55*
KN370	*25, 55*
KN376	*25, 55*
KN377	*25*
KN378	*25*
KN379	*25, 55*
KN399	*26, 56*
KN399R	*26, 56*
KN4	*21, 26, 51, 56*
KN400	*26, 56*
KN499	*26, 56*
KN5	*21, 26, 51, 56*
KN500	*26, 56*
KN501	*26, 56*
KN502	*26, 56*
KN519	*26, 56*
KN520	*26, 56*
KN521	*26, 56*
KN522	*26, 56*
KN523	*26, 56*
KN524	*26, 56*
KN525	*26, 56*
KN526	*26, 56*
KN599	*26, 56*
KN6	*21, 26, 51, 56*
KN600	*26, 56*
KN600R	*26, 56*
KN699	*26, 56*
KN699R	*26, 56*
KN700AP	*26, 56*
KN700BP	*26, 55*
KN700CP	*26, 56*
KN700GP	*26, 56*
KN700HP	*26, 56*
KN700LP	*26, 56*
KN700RP	*25, 55*
KN700SP	*25, 55*
KN700WP	*25, 55*
KN700YP	*26, 56*
KN701BP	*25, 55*
KN701SP	*25, 55*
KN701WP	*25, 55*
KN702RP	*25, 55*
KN703BP	*25, 55*
KN703SP	*25, 55*
KN703WP	*25, 55*
KN704RP	*25, 55*
KN705RP	*25, 55*
KN706BP	*25, 55*
KN706SP	*25, 55*
KN706WP	*25, 55*
KN707BP	*25, 55*
KN707SP	*25, 55*
KN707WP	*25, 55*
KN708BP	*25, 55*
KN708SP	*25, 55*
KN708WP	*25, 55*
KN709BP	*25, 55*
KN709SP	*25, 55*
KN709WP	*25, 55*
KN710BP	*25, 55*
KN710SP	*25, 55*
KN710WP	*25, 55*
KN711BP	*25, 55*
KN711SP	*25, 55*
KN711WP	*25, 55*
KN712BP	*25, 55*
KN712SP	*25, 55*
KN712WP	*25, 55*
KN713BP	*25, 55*
KN713SP	*25, 55*
KN713WP	*25, 55*
KN714BP	*25, 55*
KN714SP	*25, 55*
KN714WP	*25, 55*
KN715BP	*25, 55*
KN715SP	*25, 55*
KN715WP	*25, 55*
KN716BP	*25, 55*
KN716SP	*25, 55*
KN716WP	*25, 55*
KN717BP	*25, 55*
KN717SP	*25, 55*
KN717WP	*25, 55*
KN718BP	*25, 55*
KN718SP	*25, 55*
KN718WP	*25, 55*
KN719BP	*25, 55*
KN719SP	*25, 55*
KN719WP	*25, 55*
KN720BP	*25, 55*
KN720SP	*25, 55*
KN720WP	*25, 55*
KN721BP	*25, 55*
KN721SP	*25, 55*
KN721WP	*25, 55*
KN722BP	*25, 55*
KN722SP	*25, 55*
KN722WP	*25, 55*
KN723BP	*25, 55*
KN723SP	*25, 55*
KN723WP	*25, 55*
KN724BP	*25, 55*
KN724SP	*25, 55*
KN724WP	*25, 55*
KN725BP	*25, 55*
KN725SP	*25, 55*
KN725WP	*25, 55*
KN726BP	*25, 55*
KN726SP	*25, 55*
KN726WP	*25, 55*
KN727BP	*25, 55*
KN727SP	*25, 55*
KN727WP	*25, 55*
KN728BP	*25, 55*
KN728SP	*25, 55*
KN728WP	*25, 55*
KN729BP	*25, 55*
KN729SP	*25, 55*
KN729WP	*25, 55*
KN730BP	*25, 55*
KN730SP	*25, 55*
KN730WP	*25, 55*
KN731BP	*25, 55*
KN731SP	*25, 55*
KN731WP	*25, 55*
KN732BP	*25, 55*
KN732SP	*25, 55*
KN732WP	*25, 55*
KN733BP	*25, 55*
KN733SP	*25, 55*
KN733WP	*25, 55*
KN734BP	*25, 55*
KN734SP	*25, 55*
KN734WP	*25, 55*
KN736BP	*25, 55*
KN736SP	*25, 55*
KN736WP	*25, 55*
KN737BP	*25, 55*
KN737SP	*25, 55*
KN737WP	*25, 55*
KN738BP	*25, 55*
KN738SP	*25, 55*
KN738WP	*25, 55*
KN739BP	*25, 55*
KN739SP	*25, 55*
KN739WP	*25, 55*
KN740BP	*25, 55*
KN740SP	*25, 55*
KN740WP	*25, 55*
KN741BP	*25, 55*
KN741SP	*25, 55*
KN741WP	*25, 55*
KN742BP	*25, 55*
KN742SP	*25, 55*
KN742WP	*25, 55*
KN743BP	*25, 55*
KN743SP	*25, 55*
KN743WP	*25, 55*

KN744BP	*25, 55*
KN744SP	*25, 55*
KN744WP	*25, 55*
KN745BP	*25, 55*
KN745SP	*25, 55*
KN745WP	*25, 55*
KN746BP	*25, 55*
KN746SP	*25, 55*
KN746WP	*25, 55*
KN747BP	*25, 55*
KN747SP	*25, 55*
KN747WP	*25, 55*
KN748BP	*25, 55*
KN748SP	*25, 55*
KN748WP	*25, 55*
KN750BP	*25, 55*
KN750SP	*25, 55*
KN750WP	*25, 55*
KN751BP	*25, 55*
KN751SP	*25, 55*
KN751WP	*25, 55*
KN753BP	*25, 55*
KN753WP	*25, 55*
KN754BP	*25, 55*
KN754SP	*25, 55*
KN754WP	*25, 55*
KN755BP	*25, 55*
KN755SP	*25, 55*
KN755WP	*25, 55*
KN756BP	*25, 55*
KN756SP	*25, 55*
KN756WP	*25, 55*
KN758BP	*25, 55*
KN758SP	*25, 55*
KN758WP	*25, 55*
KN759BP	*25, 55*
KN759SP	*25, 55*
KN759WP	*25, 55*
KN760BP	*25, 55*
KN760SP	*25, 55*
KN760WP	*25, 55*
KN762BP	*25, 55*
KN762SP	*25, 55*
KN762WP	*25, 55*
KN763BP	*25, 55*
KN763SP	*25, 55*
KN763WP	*25, 55*
KN764BP	*25, 55*
KN764SP	*25, 55*
KN764WP	*25, 55*
KN765BP	*25, 55*
KN765SP	*25, 55*
KN765WP	*25, 55*
KN767BP	*25, 55*
KN767SP	*25, 55*
KN767WP	*25, 55*
KN770BP	*25, 55*
KN770SP	*25, 55*
KN770WP	*25, 55*
KN776BP	*25, 55*
KN776SP	*25, 55*
KN776WP	*25, 55*
KN777BP	*25*
KN777SP	*25*
KN777WP	*25*
KN778BP	*25*
KN778SP	*25*
KN778WP	*25*
KN779BP	*25, 55*
KN779SP	*25, 55*
KN779WP	*25, 55*
KN799AP	*26, 56*
KN799BP	*26, 56*
KN799CP	*26, 56*
KN799GP	*26, 56*
KN799HP	*26, 56*
KN799LP	*26, 56*
KN799RP	*26, 56*
KN799SP	*26, 56*
KN799WP	*26, 56*
KN799YP	*26, 56*
KN800	*25, 55*
KN800R	*25, 55*
KN801	*25, 55*
KN802	*25, 55*
KN803	*25, 55*
KN804	*25, 55*
KN805	*25, 55*
KN806	*25, 55*
KN807	*25, 55*
KN808	*25, 55*
KN809	*25, 55*
KN810	*25, 55*
KN8100	*26, 56*
KN811	*25, 55*
KN812	*25, 55*
KN813	*25, 55*
KN814	*25, 55*
KN815	*25, 55*
KN816	*25, 55*
KN817	*25, 55*
KN818	*25, 55*
KN819	*25, 55*
KN820	*25, 55*
KN821	*25, 55*
KN822	*25, 55*
KN823	*25, 55*
KN824	*25, 55*
KN825	*25, 55*
KN826	*25, 55*
KN827	*25, 55*
KN828	*25, 55*
KN829	*25, 55*
KN830	*25, 55*
KN831	*25, 55*
KN832	*25, 55*
KN833	*25, 55*
KN8330	*26, 56*
KN834	*25, 55*
KN836	*25, 55*
KN837	*25, 55*
KN838	*25, 55*
KN839	*25, 55*
KN840	*25, 55*
KN841	*25, 55*
KN842	*25, 55*
KN843	*25, 55*
KN844	*25, 55*
KN845	*25, 55*
KN846	*25, 55*
KN847	*25, 55*
KN848	*25, 55*
KN850	*25, 55*
KN851	*25, 55*
KN853	*25, 55*
KN854	*25, 55*
KN855	*25, 55*
KN856	*25, 55*
KN858	*25, 55*
KN859	*25, 55*
KN860	*25, 55*
KN862	*25, 55*
KN863	*25, 55*
KN864	*25, 55*
KN865	*25, 55*
KN867	*25, 55*
KN870	*25, 55*
KN876	*25, 55*
KN877	*25, 55*
KN899	*26, 56*
KN899R	*26, 56*
KN900	*26, 56*
KN9100	*26, 56*
KN9330	*26, 56*
KN999	*26, 56*
KP	*21*
KP●	*17*
KP●●	*17*
KP●G31	*17*
KP●R31	*17*
KP1	*17*
KP1●	*17*
KP1G31	*17*
KP1R31	*17*
KP35	*17*
KP35●	*17*
KP35G31	*17*
KP35R31	*17*
KP7	*17*
KP7●	*17*
KP7G31	*17*
KP7R31	*17*
KQ11	*18*
KQ11B	*18*
KQ12	*18*
KQ12B	*18*
KQ13	*18*
KQ13B	*18*
KQ14	*18*
KQ14B	*18*
KQ15	*18*
KQ15B	*18*
KR1●	*10*
KR1●H13	*10*
KR1●H5	*10*
KR1●H6	*10*
KR11●	*19*
KR11●H1	*19*
KR11U	*19*
KR11UH1	*19*
KR12●	*19*
KR12●H1H1	*19*
KR12U	*19*
KR12UH1H1	*19*
KR131	*18*
KR132	*18*
KR133	*18*
KR137	*18*
KR141	*18*
KR142	*18*
KR143	*18*
KR147	*18*
KR152	*18*
KR153	*18*
KR16	*12*
KR16H13	*12*
KR16H2	*12*
KR1B	*10*
KR1BH13	*10*
KR1BH5	*10*
KR1BH6	*10*
KR1G	*10*
KR1GH13	*10*
KR1GH5	*10*
KR1GH6	*10*
KR1R	*10*
KR1RH13	*10*
KR1RH5	*10*
KR1RH6	*10*
KR1U	*10*
KR1UH13	*10*
KR1UH5	*10*
KR1UH6	*10*
KR2	*21*
KR2●	*10*
KR2●H13	*10*
KR2●H5	*10*
KR2●H6	*10*
KR20	*21*
KR24●	*10*
KR24●H13	*10*
KR24●H5	*10*
KR24●H6	*10*
KR24B	*10*
KR24BH13	*10*
KR24BH5	*10*
KR24BH6	*10*
KR24BM	*10*
KR24G	*10*
KR24GH13	*10*
KR24GH5	*10*
KR24GH6	*10*
KR24GM	*10*
KR24R	*10*
KR24RH13	*10*
KR24RH5	*10*
KR24RH6	*10*
KR24RM	*10*
KR25●	*10*
KR25●H13	*10*
KR25●H5	*10*
KR25●H6	*10*
KR25B	*10*
KR25BH13	*10*
KR25BH5	*10*
KR25BH6	*10*
KR25BM	*10*
KR25G	*10*
KR25GH13	*10*
KR25GH5	*10*
KR25GH6	*10*
KR25GM	*10*
KR25R	*10*
KR25RH13	*10*
KR25RH5	*10*
KR25RH6	*10*
KR25RM	*10*
KR2B	*10*
KR2BH13	*10*
KR2BH5	*10*
KR2BH6	*10*
KR2G	*10*
KR2GH13	*10*
KR2GH5	*10*
KR2GH6	*10*
KR2R	*10*
KR2RH13	*10*
KR2RH5	*10*
KR2RH6	*10*
KR2U	*10*
KR2UH13	*10*
KR2UH5	*10*
KR2UH6	*10*
KR3	*21*
KR3●	*10*
KR3●H13	*10*
KR3●H5	*10*
KR3●H6	*10*
KR3B	*10*
KR3BH13	*10*
KR3BH5	*10*
KR3BH6	*10*
KR3G	*10*
KR3GH13	*10*
KR3GH5	*10*
KR3GH6	*10*
KR3R	*10*
KR3RH13	*10*
KR3RH5	*10*
KR3RH6	*10*
KR3U	*10*
KR3UH13	*10*
KR3UH5	*10*
KR3UH6	*10*
KR4●	*10*
KR4●H13	*10*
KR4●H5	*10*
KR4●H6	*10*
KR4B	*10*
KR4BH13	*10*
KR4BH5	*10*
KR4BH6	*10*
KR4G	*10*
KR4GH13	*10*
KR4GH5	*10*
KR4GH6	*10*
KR4R	*10*
KR4R05	*10*
KR4R05H13	*10*
KR4R05H5	*10*
KR4R05H6	*10*
KR4RH13	*10*
KR4RH5	*10*
KR4RH6	*10*
KR5●	*10*
KR5●H13	*10*
KR5●H5	*10*
KR5●H6	*10*
KR5B	*10*
KR5BH13	*10*
KR5BH5	*10*
KR5BH6	*10*
KR5G	*10*
KR5GH13	*10*
KR5GH5	*10*
KR5GH6	*10*
KR5R	*10*
KR5R05	*10*
KR5R05H13	*10*
KR5R05H5	*10*
KR5R05H6	*10*
KR5RH13	*10*
KR5RH5	*10*
KR5RH6	*10*
KR6	*21*
KR6●	*19*
KR6●H37	*19*
KR6●H7	*19*
KR67	*21*
KR67●	*19*
KR67●H37	*19*
KR67●H7	*19*
KR67GR	*19*
KR67GRH37	*19*
KR67GRH7	*19*
KR67U	*19*
KR67UH37	*19*
KR67UH7	*19*
KR6GR	*19*
KR6GRH37	*19*
KR6GRH7	*19*
KR6U	*19*
KR6UH37	*19*
KR6UH7	*19*
KR7	*21*
KR7●	*19*
KR7●H37	*19*
KR7●H7	*19*
KR7GR	*19*
KR7GRH37	*19*
KR7GRH7	*19*
KR7U	*19*
KR7UH37	*19*
KR7UH7	*19*
KR8	*21*
KR8●	*12*
KR8●H25	*12*
KR8G	*12*
KR8GH25	*12*
KR8P●●	*12*
KR8P●●H25	*12*
KR8P●RH25	*12*
KR8P1●	*12*
KR8P1●H25	*12*
KR8P1RH25	*12*
KR8R	*12*
KR8RH25	*12*
KR9	*21*
KR9●	*12*
KR9●H13	*12*

KR9BM94	*12*
KR9BM95	*12*
KR9G	*12*
KR9GH13	*12*
KR9GM94	*12*
KR9GM95	*12*
KR9P●●	*12*
KR9P●●H13	*12*
KR9P●RH13	*12*
KR9P1●	*12*
KR9P1●H13	*12*
KR9P1RH13	*12*
KR9R	*12*
KR9R94	*12*
KR9R94H13	*12*
KR9RH13	*12*
KR9RM94	*12*
KR9RM95	*12*
KRD1UH1	*19*
KRD1UH2	*19*
KRD2UH1	*19*
KRD2UH2	*19*
KRD3UH1	*19*
KRD3UH2	*19*
KS11	*13*
KS11BH1	*13*
KS11BH13	*13*
KS11BH2	*13*
KS11K	*13*
KS12	*13*
KS12K	*13*
KS25	*13*
KS25K2●	*13*
KS34	*13*
KS34K1	*13*
KS4	*21*
KS401	*14*
KS401●	*14*
KS401BH1	*14*
KS401BH13	*14*
KS401BH2	*14*
KS401K●	*14*
KS402	*14*
KS402●	*14*
KS402BH1	*14*
KS402BH13	*14*
KS402BH2	*14*
KS402K●	*14*
KS42	*14*
KS42●	*14*
KS42BH1	*14*
KS42BH13	*14*
KS42BH2	*14*
KS42K●	*14*
KS43	*14*
KS43●	*14*
KS43BH1	*14*
KS43BH13	*14*
KS43BH2	*14*
KS43K●	*14*
KS44	*14*
KS44●	*14*
KS44BH1	*14*
KS44BH13	*14*
KS44BH2	*14*
KS44K●	*14*
KS45	*14*
KS45●	*14*
KS45BH1	*14*
KS45BH13	*14*
KS45BH2	*14*
KS45K●	*14*
KS46	*14*
KS46●	*14*
KS46BH1	*14*
KS46BH13	*14*
KS46BH2	*14*
KS46K●	*14*
KS47	*14*
KS47●	*14*
KS47BH1	*14*
KS47BH13	*14*
KS47BH2	*14*
KS47K●	*14*
KS49	*14*
KS49●	*14*
KS49BH1	*14*
KS49BH13	*14*
KS49BH2	*14*
KS49K●	*14*
KS5	*21*
KS501	*14*
KS501●	*14*
KS501K●	*14*
KS502	*14*
KS502●	*14*
KS502K●	*14*
KS52	*14*
KS52●	*14*
KS52K●	*14*
KS53	*14*
KS53●	*14*
KS53K●	*14*
KS54	*14*
KS54●	*14*
KS54K●	*14*
KS55	*14*
KS55●	*14*
KS55K●	*14*
KS56	*14*
KS56●	*14*
KS56K●	*14*
KS57	*14*
KS57●	*14*
KS57K●	*14*
KS59	*14*
KS59●	*14*
KS59K●	*14*
KS6	*21*
KS601	*14*
KS601●	*14*
KS601K●	*14*
KS602	*14*
KS602●	*14*
KS602K●	*14*
KS62	*14*
KS62●	*14*
KS62K●	*14*
KS63	*14*
KS63●	*14*
KS63K●	*14*
KS64	*14*
KS64●	*14*
KS64K●	*14*
KS65	*14*
KS65●	*14*
KS65K●	*14*
KS66	*14*
KS66●	*14*
KS66K●	*14*
KS67	*14*
KS67●	*14*
KS67K●	*14*
KS69	*14*
KS69●	*14*
KS69K●	*14*
KS7	*21*
KS701	*14*
KS701●	*14*
KS701K●	*14*
KS702	*14*
KS702●	*14*
KS702K●	*14*
KS72	*14*
KS72●	*14*
KS72K●	*14*
KS73	*14*
KS73●	*14*
KS73K●	*14*
KS74	*14*
KS74●	*14*
KS74K●	*14*
KS75	*14*
KS75●	*14*
KS75K●	*14*
KS76	*14*
KS76●	*14*
KS76K●	*14*
KS77	*14*
KS77●	*14*
KS77K●	*14*
KS79	*14*
KS79●	*14*
KS79K●	*14*
KS88	*15*
KS88●	*15*
KS88J●●	*15*
KS88J1	*15*
KS88J1R	*15*
KS88K●	*15*
KT●	*17*
KT●●	*17*
KT●G31	*17*
KT●R31	*17*
KT1	*17*
KT1●	*17*
KT1G31	*17*
KT1R31	*17*
KT35	*17*
KT35●	*17*
KT35G31	*17*
KT35R31	*17*
KT7	*17*
KT7●	*17*
KT7G31	*17*
KT7R31	*17*
KTR●	*17*
KTR●●	*17*
KTR●G31	*17*
KTR●R31	*17*
KTR35	*17*
KTR35●	*17*
KTR35G31	*17*
KTR35R31	*17*
KTR38	*17*
KTR38●	*17*
KTR38G31	*17*
KTR38R31	*17*
KU1	*27*
KU17	*27, 57*
KU18	*27, 57*
KU2	*27*
KU27	*27, 57*
KU3	*27*
KU37	*27, 57*
KU4	*27*
KU47	*27, 57*
KU5	*27*
KU6	*27*
KU7	*27*
KU8	*27*
KX	
KXAA1	*75*
KXAA2	*75*
KXAA3	*75*
KXAA4	*75*
KXAA5	*75*
KXAA8	*75*
KXAAM1	*75*
KXAC28	*75*
KXAC48	*75*
KXAG1	*75*
KXAG2	*75*
KXAG3	*75*
KXAG4	*75*
KXAG5	*75*
KXAG8	*75*
KXAGM1	*75*
KXAK40B	*75*
KXAK40R	*75*
KXAK41B	*75*
KXAK41R	*75*
KXAK52	*75*
KXAKU17B	*75*
KXAKU7	*75*
KXAL1	*75*
KXAL2	*75*
KXAL3	*75*
KXAL4	*75*
KXAL5	*75*
KXAL8	*75*
KXALLRT	*75*
KXALM1	*75*
KXAR1	*75*
KXAR2	*75*
KXAR3	*75*
KXAR4	*75*
KXAR5	*75*
KXAR8	*75*
KXARM1	*75*
KXAW1	*75*
KXAW2	*75*
KXAW3	*75*
KXAW4	*75*
KXAW5	*75*
KXAW8	*75*
KXAWM1	*75*
KXBB06	*72*
KXBB07	*72*
KXBB08	*72*
KXBD83	*72*
KXN100	*74*
KXN101	*74*
KXN102	*74*
KXN103	*74*
KXN104	*74*
KXN105	*74*
KXN106	*74*
KXN107	*74*
KXN108	*74*
KXN109	*74*
KXN110	*74*
KXN111	*74*
KXN118	*74*
KXN123	*74*
KXN124	*74*
KXN132	*74*
KXN136	*74*
KXN138	*74*
KXN199	*74*
KXN200	*74*
KXN201	*74*
KXN201V	*74*
KXN202	*74*
KXN202V	*74*
KXN203	*74*
KXN203V	*74*
KXN204	*74*
KXN204V	*74*
KXN205	*74*
KXN205V	*74*
KXN206	*74*
KXN206V	*74*
KXN207	*74*
KXN207V	*74*
KXN208	*74*
KXN208V	*74*
KXN209	*74*
KXN209V	*74*
KXN210	*74*
KXN210V	*74*
KXN211	*74*
KXN211V	*74*
KXN218	*74*
KXN218V	*74*
KXN223	*74*
KXN223V	*74*
KXN224	*74*
KXN224V	*74*
KXN232	*74*
KXN232V	*74*
KXN236	*74*
KXN236V	*74*
KXN238	*74*
KXN238V	*74*
KXN299	*74*
KXN299V	*74*
KXN300	*74*
KXN301	*74*
KXN302	*74*
KXN303	*74*
KXN304	*74*
KXN305	*74*
KXN306	*74*
KXN307	*74*
KXN308	*74*
KXN309	*74*
KXN310	*74*
KXN311	*74*
KXN318	*74*
KXN323	*74*
KXN324	*74*
KXN332	*74*
KXN336	*74*
KXN338	*74*
KXN399	*74*
KXN400	*74*
KXN401	*74*
KXN402	*74*
KXN403	*74*
KXN404	*74*
KXN405	*74*
KXN406	*74*
KXN407	*74*
KXN408	*74*
KXN409	*74*
KXN410	*74*
KXN411	*74*
KXN418	*74*
KXN423	*74*
KXN424	*74*
KXN432	*74*
KXN436	*74*
KXN438	*74*
KXN499	*74*
KXN500	*74*
KXN501	*74*
KXN502	*74*
KXN503	*74*
KXN504	*74*
KXN505	*74*
KXN506	*74*
KXN507	*74*
KXN508	*74*
KXN509	*74*
KXN510	*74*
KXN511	*74*
KXN518	*74*
KXN523	*74*
KXN524	*74*
KXN532	*74*
KXN536	*74*
KXN538	*74*
KXN599	*74*
KXN600	*74*
KXN639	*74*
KXN640	*74*
KXN643	*74*
KXN644	*74*
KXN645	*74*

KXN646	*74*
KXN651	*74*
KXN658	*74*
KXN660	*74*
KXN662	*74*
KXN699	*74*
KXN700	*74*
KXN739	*74*
KXN740	*74*
KXN743	*74*
KXN744	*74*
KXN745	*74*
KXN746	*74*
KXN751	*74*
KXN758	*74*
KXN760	*74*
KXN762	*74*
KXN799	*74*
KXPA1A	*73*
KXPA1G	*73*
KXPA1R	*73*
KXPA1W	*73*
KXPA35A	*73*
KXPA35G	*73*
KXPA35R	*73*
KXPA35W	*73*
KXPB1AA	*73*
KXPB1GG	*73*
KXPB1RG	*73*
KXPB1RR	*73*
KXPB1WW	*73*
KXPB34AA	*73*
KXPB34GG	*73*
KXPB34RG	*73*
KXPB34RR	*73*
KXPB34WW	*73*
KXPC1WAGR	*73*
KXPC1WLGR	*73*
KXPC34WAGR	*73*
KXRA133	*70*
KXRA134	*70*
KXRAA	*71*
KXRAAH2	*70*
KXRAG	*71*
KXRAGH2	*70*
KXRAL	*71*
KXRALH2	*70*
KXRAR	*71*
KXRAW	*71*
KXRB1AH1	*70*
KXRB1GH1	*70*
KXRB1RH1	*70*
KXRB34AH1	*70*
KXRB34GH1	*70*
KXRB34RH1	*70*
KXRB35A	*71*
KXRB35G	*71*
KXRB35L	*71*
KXRB35R	*71*
KXRB35W	*71*
KXRB38A	*71*
KXRB38G	*71*
KXRB38L	*71*
KXRB38R	*71*
KXRB38W	*71*
KXRC111	*70*
KXRC136	*70*
KXRCGG	*71*
KXRCGR	*71*
KXRCWW	*71*
KXRD140	*70*
KXRDLLH7	*70*
KXRE115	*70*
KXREGG	*71*
KXREGR	*71*
KXRELLH2	*70*
KXRELLH3	*70*
KXREWW	*71*
KXRG117	*70*
KXRG137	*70*
KXRG35GWG	*71*
KXRG35RWG	*71*
KXRG38GWG	*71*
KXRG38RWG	*71*
KXRH354GWG	*71*
KXRH35RWG	*71*
KXRH38GWG	*71*
KXRH38RWG	*71*
KXRJ119	*70*
KXRJ35GWG	*71*
KXRJ35RWG	*71*
KXRJ38GWG	*71*
KXRJ38RWG	*71*
KXRL121	*70*
KXRL138	*70*
KXRL34GRGRH2	*70*
KXRL34GRGRH37	*70*
KXRL35GGRR	*71*
KXRL35RWWG	*71*
KXRL38GGRR	*71*
KXRL38RWWG	*71*
KXRM35RRGG	*71*
KXRM35RWWG	*71*
KXRM38RRGG	*71*
KXRM38RWWG	*71*
KXSA125	*72*
KXSA139	*72*
KXSAEB	*72*
KXSD126	*72*
KXSDCB	*72*
KXSHHB	*72*
KXSJE35G	*72*
KXSJE35R	*72*
KXSJE35W	*72*
KXSJE38G	*72*
KXSJE38R	*72*
KXSJE38W	*72*
KXSRE1	*72*
KXSRE2	*72*
KXSRE3	*72*
KXSVC10	*72*
KXSVC5	*72*
L	
L20	*28, 58*
L21	*28, 58*
L22	*28, 58*
L24	*28, 58*
L31	*28, 58*
L6	*28, 58*
L7	*28, 58*
L8	*28, 58*
L9	*28, 58*
R	
R19	*28, 58*
R20	*28, 58*
R21	*28, 58*
R22	*28, 58*
R2205	*28, 58*
R24	*28, 58*
R31	*28, 58*
R6	*28, 58*
R7	*28, 58*
R8	*28, 58*
R9	*28, 58*
R94	*28, 58*
S	
S11	*28, 58*
S23	*28, 58*
S25	*28, 58*
SK	
SK11J●●	*44*
SK11J1	*44*
SK11J1R	*44*
SK12J●●	*44*
SK12J1	*44*
SK12J1R	*44*
SK1L	*51*
SK1L●	*42*
SK1L●GH13	*42*
SK1L●RH13	*42*
SK1L1	*42*
SK1L1GH13	*42*
SK1L1RH13	*42*
SK1L35	*42*
SK1L35GH13	*42*
SK1L35RH13	*42*
SK1L7	*42*
SK1L7GH13	*42*
SK1L7RH13	*42*
SK20	*46*
SK21	*46*
SK22	*46*
SK23	*46*
SK25J●●	*44*
SK25J1	*44*
SK25J1R	*44*
SK2L	*51*
SK2L●	*42*
SK2L●G20H13	*42*
SK2L●G21H13	*42*
SK2L●GH13	*42*
SK2L●R20H13	*42*
SK2L●R21H13	*42*
SK2L●RH13	*42*
SK2L1	*42*
SK2L1G20H13	*42*
SK2L1G21H13	*42*
SK2L1GH13	*42*
SK2L1R20H13	*42*
SK2L1R21H13	*42*
SK2L1RH13	*42*
SK2L35	*42*
SK2L35G20H13	*42*
SK2L35G21H13	*42*
SK2L35GH13	*42*
SK2L35R20H13	*42*
SK2L35R21H13	*42*
SK2L35RH13	*42*
SK2L7	*42*
SK2L7G20H13	*42*
SK2L7G21H13	*42*
SK2L7GH13	*42*
SK2L7R20H13	*42*
SK2L7R21H13	*42*
SK2L7RH13	*42*
SK34J●●	*44*
SK34J1	*44*
SK34J1R	*44*
SK40	*59*
SK401J●●	*45*
SK401J1	*45*
SK401J1R	*45*
SK402J●●	*45*
SK402J1	*45*
SK402J1R	*45*
SK41	*59*
SK42	*59*
SK42J●●	*45*
SK42J1	*45*
SK42J1R	*45*
SK43J●●	*45*
SK43J1	*45*
SK43J1R	*45*
SK44	*59*
SK44J●●	*45*
SK44J1	*45*
SK44J1R	*45*
SK45	*59*
SK45J●●	*45*
SK45J1	*45*
SK45J1R	*45*
SK46	*59*
SK46J●●	*45*
SK46J1	*45*
SK46J1R	*45*
SK47J●●	*45*
SK47J1	*45*
SK47J1R	*45*
SK49	*59*
SK49J●●	*45*
SK49J1	*45*
SK49J1R	*45*
SK501J●●	*45*
SK501J1	*45*
SK501J1R	*45*
SK502J●●	*45*
SK502J1	*45*
SK502J1R	*45*
SK52J●●	*45*
SK52J1	*45*
SK52J1R	*45*
SK53J●●	*45*
SK53J1	*45*
SK53J1R	*45*
SK54J●●	*45*
SK54J1	*45*
SK54J1R	*45*
SK55J●●	*45*
SK55J1	*45*
SK55J1R	*45*
SK56J●●	*45*
SK56J1	*45*
SK56J1R	*45*
SK57J●●	*45*
SK57J1	*45*
SK57J1R	*45*
SK59J●●	*45*
SK59J1	*45*
SK59J1R	*45*
SK601J●●	*45*
SK601J1	*45*
SK601J1R	*45*
SK602J●●	*45*
SK602J1	*45*
SK602J1R	*45*
SK62J●●	*45*
SK62J1	*45*
SK62J1R	*45*
SK63J●●	*45*
SK63J1	*45*
SK63J1R	*45*
SK64J●●	*45*
SK64J1	*45*
SK64J1R	*45*
SK65J●●	*45*
SK65J1	*45*
SK65J1R	*45*
SK66J●●	*45*
SK66J1	*45*
SK66J1R	*45*
SK67J●●	*45*
SK67J1	*45*
SK67J1R	*45*
SK69J●●	*45*
SK69J1	*45*
SK69J1R	*45*
SK701J●●	*45*
SK701J1	*45*
SK701J1R	*45*
SK702J●●	*45*
SK702J1	*45*
SK702J1R	*45*
SK72J●●	*45*
SK72J1	*45*
SK72J1R	*45*
SK73J●●	*45*
SK73J1	*45*
SK73J1R	*45*
SK74J●●	*45*
SK74J1	*45*
SK74J1R	*45*
SK75J●●	*45*
SK75J1	*45*
SK75J1R	*45*
SK76J●●	*45*
SK76J1	*45*
SK76J1R	*45*
SK77J●●	*45*
SK77J1	*45*
SK77J1R	*45*
SK79J●●	*45*
SK79J1	*45*
SK79J1R	*45*
SK88J●●	*46*
SK88J1	*46*
SK88J1R	*46*
SKP	*51*
SKP●	*48*
SKP●●	*48*
SKP●G31	*48*
SKP●R31	*48*
SKP1	*48*
SKP1●	*48*
SKP1G31	*48*
SKP1R31	*48*
SKP35	*48*
SKP35●	*48*
SKP35G31	*48*
SKP35R31	*48*
SKP7	*48*
SKP7●	*48*
SKP7G31	*48*
SKP7R31	*48*
SKR1●	*41*
SKR1●H13	*41*
SKR1●H5	*41*
SKR1●H6	*41*
SKR11●	*49*
SKR11●H1	*49*
SKR11U	*49*
SKR11UH1	*49*
SKR12●	*49*
SKR12●H1H1	*49*
SKR12U	*49*
SKR12UH1H1	*49*
SKR16	*43*
SKR16H13	*43*
SKR16H2	*43*
SKR1B	*41*
SKR1BH13	*41*
SKR1BH5	*41*
SKR1BH6	*41*
SKR1G	*41*
SKR1GH13	*41*
SKR1GH5	*41*
SKR1GH6	*41*
SKR1R	*41*
SKR1RH13	*41*
SKR1RH5	*41*
SKR1RH6	*41*
SKR1U	*41*
SKR1UH13	*41*
SKR1UH5	*41*
SKR1UH6	*41*
SKR2	*51*
SKR2●	*41*
SKR2●H5	*41*
SKR2●H6	*41*
SKR20	*51*
SKR24●	*41*
SKR24●H13	*41*
SKR24●H5	*41*
SKR24●H6	*41*
SKR24B	*41*
SKR24BH13	*41*
SKR24BH5	*41*
SKR24BH6	*41*
SKR24G	*41*
SKR24GH13	*41*
SKR24GH5	*41*

SKR24GH6 *41*
SKR24R *41*
SKR24RH13 *41*
SKR24RH5 *41*
SKR24RH6 *41*
SKR25● *41*
SKR25●H13 *41*
SKR25●H5 *41*
SKR25●H6 *41*
SKR25B *41*
SKR25BH13 *41*
SKR25BH5 *41*
SKR25BH6 *41*
SKR25G *41*
SKR25GH13 *41*
SKR25GH5 *41*
SKR25GH6 *41*
SKR25R *41*
SKR25RH13 *41*
SKR25RH5 *41*
SKR25RH6 *41*
SKR2B *41*
SKR2BH13 *41*
SKR2BH5 *41*
SKR2BH6 *41*
SKR2G *41*
SKR2GH13 *41*
SKR2GH5 *41*
SKR2GH6 *41*
SKR2R *41*
SKR2RH13 *41*
SKR2RH5 *41*
SKR2RH6 *41*
SKR2U *41*
SKR2UH13 *41*
SKR2UH5 *41*
SKR2UH6 *41*
SKR3 *51*
SKR3● *41*
SKR3●H13 *41*
SKR3●H5 *41*
SKR3●H6 *41*
SKR3B *41*
SKR3BH13 *41*
SKR3BH5 *41*
SKR3BH6 *41*
SKR3G *41*
SKR3GH13 *41*
SKR3GH5 *41*
SKR3GH6 *41*
SKR3R *41*
SKR3RH13 *41*
SKR3RH5 *41*
SKR3RH6 *41*
SKR3U *41*
SKR3UH13 *41*
SKR3UH5 *41*
SKR3UH6 *41*
SKR4● *41*
SKR4●H13 *41*
SKR4●H5 *41*
SKR4●H6 *41*
SKR4B *41*
SKR4BH13 *41*
SKR4BH5 *41*
SKR4BH6 *41*
SKR4G *41*
SKR4GH13 *41*
SKR4GH5 *41*
SKR4GH6 *41*
SKR4R *41*
SKR4R05 *41*
SKR4R05H13 *41*
SKR4R05H5 *41*
SKR4R05H6 *41*
SKR4RH13 *41*
SKR4RH5 *41*
SKR4RH6 *41*
SKR5● *41*
SKR5●H13 *41*
SKR5●H5 *41*
SKR5●H6 *41*
SKR5B *41*
SKR5BH13 *41*
SKR5BH5 *41*
SKR5BH6 *41*
SKR5G *41*
SKR5GH13 *41*
SKR5GH5 *41*
SKR5GH6 *41*
SKR5R *41*
SKR5R05 *41*
SKR5R05H13 *41*
SKR5R05H5 *41*
SKR5R05H6 *41*
SKR5RH13 *41*
SKR5RH5 *41*
SKR5RH6 *41*
SKR8 *51*
SKR8● *43*
SKR8●H25 *43*
SKR8G *43*
SKR8GH25 *43*
SKR8P●● *43*
SKR8P●●H25 *43*
SKR8P●RH25 *43*
SKR8P1● *43*
SKR8P1●H25 *43*
SKR8P1RH25 *43*
SKR8R *43*
SKR8RH25 *43*
SKR9 *51*
SKR9● *43*
SKR9●H13 *43*
SKR9G *43*
SKR9GH13 *43*
SKR9P●● *43*
SKR9P●●H13 *43*
SKR9P●RH13 *43*
SKR9P1● *43*
SKR9P1●H13 *43*
SKR9P1RH13 *43*
SKR9R *43*
SKR9RH13 *43*
SKS11 *44*
SKS11● *44*
SKS11BH1 *44*
SKS11BH13 *44*
SKS11BH2 *44*
SKS12 *44*
SKS12● *44*
SKS25 *44*
SKS25● *44*
SKS34 *44*
SKS34● *44*
SKS4 *51*
SKS401 *45*
SKS401● *45*
SKS401BH1 *45*
SKS401BH13 *45*
SKS401BH2 *45*
SKS402 *45*
SKS402● *45*
SKS402BH1 *45*
SKS402BH13 *45*
SKS402BH2 *45*
SKS42 *45*
SKS42● *45*
SKS42BH1 *45*
SKS42BH13 *45*
SKS42BH2 *45*
SKS43 *45*
SKS43● *45*
SKS43BH1 *45*
SKS43BH13 *45*
SKS43BH2 *45*
SKS44 *45*
SKS44● *45*
SKS44BH1 *45*
SKS44BH13 *45*
SKS44BH2 *45*
SKS45 *45*
SKS45● *45*
SKS45BH1 *45*
SKS45BH13 *45*
SKS45BH2 *45*
SKS46 *45*
SKS46● *45*
SKS46BH1 *45*
SKS46BH13 *45*
SKS47 *45*
SKS47● *45*
SKS47BH1 *45*
SKS47BH13 *45*
SKS47BH2 *45*
SKS49 *45*
SKS49● *45*
SKS49BH1 *45*
SKS49BH13 *45*
SKS49BH2 *45*
SKS5 *51*
SKS501 *45*
SKS501● *45*
SKS502 *45*
SKS502● *45*
SKS52 *45*
SKS52● *45*
SKS53 *45*
SKS53● *45*
SKS54 *45*
SKS54● *45*
SKS55 *45*
SKS55● *45*
SKS56 *45*
SKS56● *45*
SKS57 *45*
SKS57● *45*
SKS59 *45*
SKS59● *45*
SKS6 *51*
SKS601 *45*
SKS601● *45*
SKS602 *45*
SKS602● *45*
SKS62 *45*
SKS62● *45*
SKS63 *45*
SKS63● *45*
SKS64 *45*
SKS64● *45*
SKS65 *45*
SKS65● *45*
SKS66 *45*
SKS66● *45*
SKS67 *45*
SKS67● *45*
SKS69 *45*
SKS69● *45*
SKS7 *51*
SKS701 *45*
SKS701● *45*
SKS702 *45*
SKS702● *45*
SKS72 *45*
SKS72● *45*
SKS73 *45*
SKS73● *45*
SKS74 *45*
SKS74● *45*
SKS75 *45*
SKS75● *45*
SKS76 *45*
SKS76● *45*
SKS77 *45*
SKS77● *45*
SKS79 *45*
SKS79● *45*
SKS88 *46*
SKS88● *46*
SKT● *48*
SKT●● *48*
SKT●G31 *48*
SKT●R31 *48*
SKT1 *48*
SKT1● *48*
SKT1G31 *48*
SKT1R31 *48*
SKT35 *48*
SKT35● *48*
SKT35G31 *48*
SKT35R31 *48*
SKT7 *48*
SKT7● *48*
SKT7G31 *48*
SKT7R31 *48*
SKTR● *48*
SKTR●● *48*
SKTR●G31 *48*
SKTR●R31 *48*
SKTR35 *48*
SKTR35● *48*
SKTR35G31 *48*
SKTR35R31 *48*
SKTR38 *48*
SKTR38● *48*
SKTR38G31 *48*
SKTR38R31 *48*
SS
SSKS46BH2 *45*
T
T5BE *28, 58*
T5BK *28, 58*
T5GN *28, 58*
T5OE *28, 58*
T5RD *28, 58*
T5WH *28, 58*
T5YW *28, 58*
T8BE *28, 58*
T8BK *28, 58*
T8GN *28, 58*
T8GY *28, 58*
T8OE *28, 58*
T8RD *28, 58*
T8U *28, 58*
T8WH *28, 58*
T8YW *28, 58*
U
U19 *28, 58*
W
W20 *28, 58*
W21 *28, 58*
W22 *28, 58*
W24 *28, 58*
W31 *28, 58*
W6 *28, 58*
W7 *28, 58*
W8 *28, 58*
W9 *28, 58*
Y
Y20 *28, 58*
Y21 *28, 58*
Y22 *28, 58*
Y24 *28, 58*
Y31 *28, 58*
Y6 *28, 58*
Y7 *28, 58*
Y8 *28, 58*
Y9 *28, 58*

http://www.schneider-electric.us/

Schneider Electric USA, Inc.
8001 Knightdale Blvd.
Knightdale, NC 27545

USA Customer Care Center
Tel: 888-778-2733

Schneider Electric Canada
5985 McLaughlin Rd.
Missassauga, Ontario, Canada L5R 1B8

Canada Customer Care Center
Tel: 800-565-6699

The information and dimensions in this catalog are provided for the convenience of our customers. While this information is believed to be accurate, Schneider Electric reserves the right to make updates and changes without prior notification and assumes no liability for any errors or omissions.

Harmony, Schneider Electric and logo are trademarks or registered trademarks of Schneider Electric or its affiliates in the United States and other countries. Other trademarks used herein are the property of their respective owners.

Design: Schneider Electric
Photos: Schneider Electric

9001CT1103

© 2011 Schneider Electric. All rights reserved.

05/2011

Mouser Electronics

Authorized Distributor

Click to View Pricing, Inventory, Delivery & Lifecycle Information:

Schneider Electric:

9001KU2 9001K26 9001K51 9001KA3G 9001K56YM 9001KA1G 9001KA2 9001KA2G 9001KA32 9001KA4 9001KA53 9001KA6 9001KM1 9001KM38 9001KN223BP 9001KA3 9001KN201 9001KP1G31 9001KA1 9001KA51 9001KA5 9001KP35LRR9 9001KXSJ128 9001K6 9001K62 9001KM35 9001KN243BP 9001KN302 9001KS11BH13 9001KR25GH13 9001KS11BH2 9001KS43BH13 9001KS43BH1 9001KR24Y 9001KS11FBH5 9001KR4R05H6 9001KR9RH13 9001K35H2 9001KS11FB 9001KR1U 9001KS43BH2 9001KR2U 9001KR2UH13 9001KR3BH13 9001KR1UH6 9001KS46FB 9001KS11BH1 9001K31 9001KS11K1 9001KR1R 9001K71 9001KR4R05H13 9001KS11B 9001KS46BH2 9001KR4RH6 9001KR3BH5 9001KR3UH6 9001KXRB103 9001KXRH118 9001KXRJ119 9001KXRB1 9001KXRAR 9001KXRELLH3KXN203KXN204 9001KXREWW 9001KXRB104 9001KXRB31LH2 9001KXRB35AH13 9001KXRB35R 9001KXREGG 9001KXRELLH2KXN203KXN204 9001KXRAWH43 9001KXRA134 9001KXRB 9001KXRB1A 9001KXRB1AH6 9001KXRB1GH5 9001KXRK120 9001KXRL1 9001KXRL121 9001KXRL138 9001KXRN 9001KXRNR 9001KXRG38GGRH2 9001KXRG38WGW 9001KXRJ 9001KXRJ1GGR 9001KXRJ1WGW 9001KXRK1GRR 9001KXREAA 9001KXRF116 9001KXRG1AAR 9001KXRG1GGRH21 9001KXRG1WGW 9001KXRG117 9001KXRCAA 9001KXRDAA 9001KXRDGR 9001KXRDLLH7 9001KXRDWW 9001KXRD114