THIS DRAWING IS UNPUBLISHED. RELEASED FOR PUBLICATION -,- .
© COPYRIGHT - By - ALL RIGHTS RESERVED.

LOC	DIST
GP	00

REVISIONS

P	LTR	DESCRIPTION	DATE	DWN	APVD
	A	REVISED PER ECO-11-019758	15FEB2012	CJV	CWR

1. PREFIX AND SUFFIX NUMBERS MUST MATCH THOSE ON PLUG ASSEMBLY FOR PARTS TO MATE.
2. POLYESTER, FLAME RETARDANT, UL 94V-0 RATED, GLASS FILLED, BLACK.
3. 0.76µm [.000030] MIN BRIGHT TIN OVER 1.27µm [.000050] MIN NICKEL.
4. 1.27µm [.000050] MIN GOLD ON MATING SURFACE FOR A LENGTH OF 2.54 [.100] MIN, 3.81µm [.000150] MIN MATTE TIN ON OPPOSITE END FOR A LENGTH OF 3.81 [.150] MIN, BOTH OVER 1.27µm [.000050] MIN NICKEL ON ENTIRE CONTACT.
5. DIMENSION INDICATES CONTACT MATING AREA.
6. PLATING MEASUREMENT POINT.

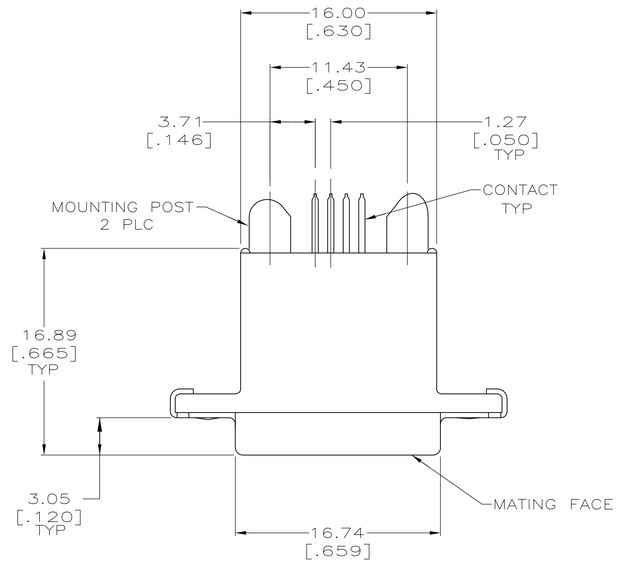

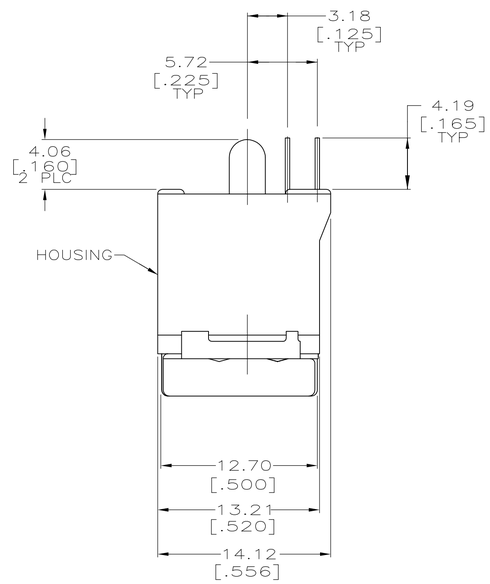

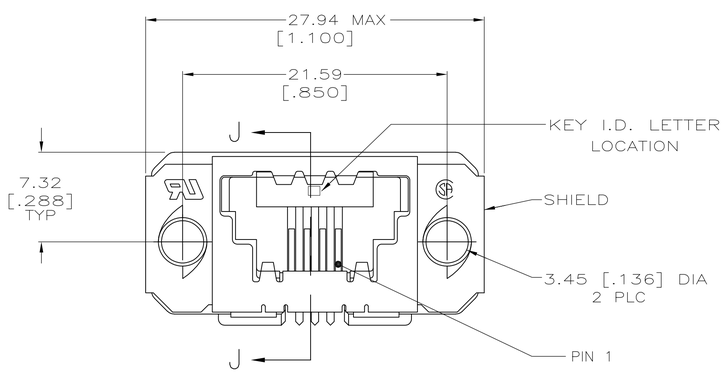

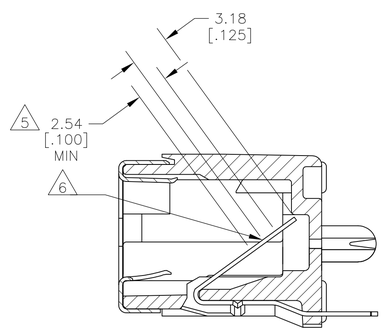

SECTION J-J

KEY I.D. LETTER	PART NO
D	4-1761207-1

THIS DRAWING IS A CONTROLLED DOCUMENT.
DIMENSIONING AND TOLERANCING PER ASME Y14.5M-2009

DIMENSIONS: mm[INCHES]

TOLERANCES UNLESS OTHERWISE SPECIFIED:
0 PLC ± -
1 PLC ± -
2 PLC ± 0.38 [.015]
3 PLC ± -
4 PLC ± -
ANGLES ± -

MATERIAL
HOUSING: 2
SHIELD: BRASS
CONTACT: PHOS BRONZE

FINISH
SHIELD: 3
CONTACT: 4

DWN B. MCMASTER 18FEB04
CHK C. ROHDE 30APR04
APVD M. WALMSLEY 30APR04
PRODUCT SPEC 108-2047
APPLICATION SPEC 114-2081
WEIGHT -

TE Connectivity

NAME
RECEPTACLE ASSEMBLY,
4 POSN, TOP ENTRY,
FOR .093 PC BOARD, SDL

SIZE	CAGE CODE	DRAWING NO	RESTRICTED TO
A1	00779	C-1761207	-

CUSTOMER DRAWING | SCALE 4:1 | SHEET 1 OF 1 | REV A

4805 (3/11)