AMP® Power Lock Connectors have hermaphroditic housing and contact designs. The hermaphroditic housings are also modular in design and permit the clustering of connectors of the same series. Housings are made of impact resistant thermoplastic with stainless steel locking springs for contact stability. Terminals are available in strip and loose piece form with a material choice of silver, or gold plated copper. Contacts for Series I Connectors accept a wire size range of 18-12 AWG and contacts for Series II Connectors accept a wire size range of 10-6 AWG. Both insert easily into housings where integral locking springs provide positive retention.

AMP Power Lock Connectors can be adapted to most high current applications and may be used as free-hanging, surface mounted and thru-panel mounted connectors, or when posted contacts are used, they can be used on printed circuits.

## Series I Connectors (18-12 AWG)

### Connector Housing Assembly

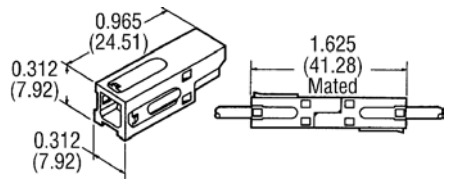


### Housing: Polycarbonate

| Stock No. | Mfr.'s Type | Color | EACH | | |
|---|---|---|---|---|---|
| | | | 1-99 | 100-499 | 500-999 |
| 512-8222 | 53894-1 | White | .42 | .38 | .31 |
| 512-8224 | 53894-2 | Black | .44 | .39 | .33 |
| 512-8226 | 53894-3 | Green | .42 | .38 | .31 |
| 512-8992 | 53894-4 | Red | .44 | .39 | .33 |
| 512-8230 | 53894-5 | Yellow | .42 | .38 | .31 |
| 512-8232 | 53894-6 | Blue | .65 | .58 | .45 |

### Adapter

**Mounting Adapter**

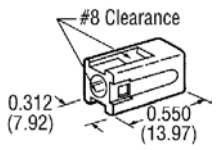


### Housing: Polycarbonate (Red)

| Stock No. | Mfr.'s Type | Type | EACH | | |
|---|---|---|---|---|---|
| | | | 1-99 | 100-499 | 500-999 |
| 512-8240 | 54315-1 | Mounting | .39 | .35 | .29 |

### In-Line Housings

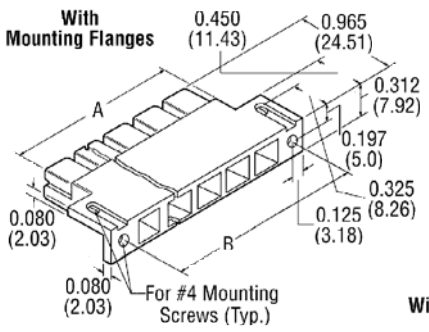


**Without Mounting Flanges**

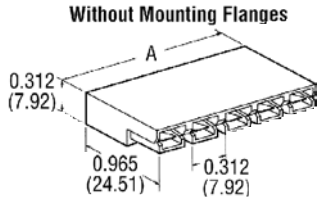


### Housing: Nylon, Natural Color

| Stock No. | Mfr.'s Type | No. Of Pos. | With Flanges | Dimensions (In.) | | EACH | |
|---|---|---|---|---|---|---|---|
| | | | | A | B | 1-49 | 50-99 |
| 512-8242 | 54489-2 | 2 | Yes | 0.624 | 0.874 | 1.78 | 1.62 |
| 512-8244 | 54483-2 | 2 | No | 0.624 | — | 1.76 | 1.60 |
| 512-8246 | 54489-3 | 3 | Yes | 0.936 | 1.186 | 2.50 | 2.27 |
| 512-8250 | 54489-4 | 4 | Yes | 1.248 | 1.498 | 3.15 | 2.86 |
| 512-8252 | 54483-4 | 4 | No | 1.248 | — | 3.01 | 2.74 |
| 512-8254 | 54489-5 | 5 | Yes | 1.560 | 1.810 | 3.81 | 3.46 |
| 512-8256 | 54483-5 | 5 | No | 1.560 | — | 5.83 | 5.30 |
| 512-8258 | 54489-6 | 6 | Yes | 1.872 | 2.122 | 4.47 | 4.06 |
| 512-8260 | 54483-6 | 6 | No | 1.872 | — | 4.28 | 3.89 |

## Series I Contacts

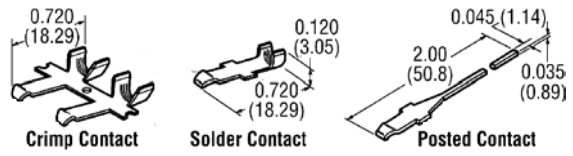


| Stock No. | Mfr.'s Type | Type | Wire AWG | Plating | EACH | |
|---|---|---|---|---|---|---|
| | | | | | 1-999 | 1000-4999 |
| 512-8991 | 53892-4 | Crimp | 18-12 | Silver | .16 | .15 |
| 512-8264 | 53892-7 | Crimp | 18-12 | Gold | 1.47 | 1.32 |
| 512-8266 | 54329-1 | Solder | 12 Max. | Silver | .17 | .15 |
| 512-8268 | 54326-2 | Posted | — | Silver | .51 | .46 |
| 512-8270 | 54326-1 | Posted | — | Gold | 1.50 | 1.35 |

## Series II Connectors (10-6 AWG)

### Connector Housing Assembly

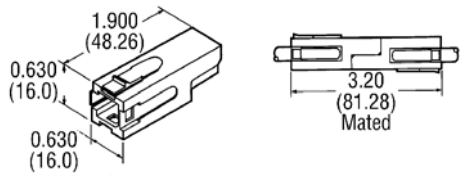


### Housing: Polycarbonate

| Stock No. | Mfr.'s Type | Color | EACH | | |
|---|---|---|---|---|---|
| | | | 1-99 | 100-499 | 500-999 |
| 512-8272 | 53884-1 | Blue | 2.38 | 2.10 | 1.75 |
| 512-8274 | 53884-3 | Black | 1.63 | 1.47 | 1.22 |
| 512-8276 | 53884-4 | Red | 1.71 | 1.54 | 1.28 |

### Adapters

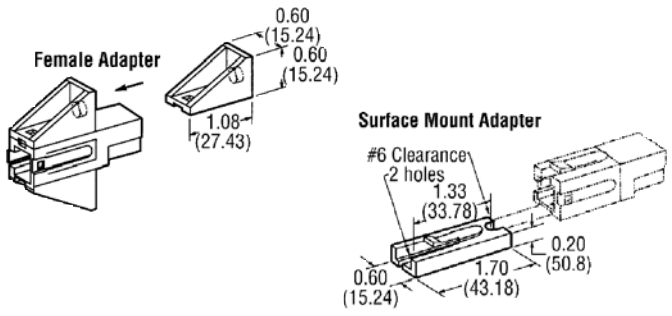


| Stock No. | Mfr.'s Type | Type | Color | EACH | | |
|---|---|---|---|---|---|---|
| | | | | 1-99 | 100-499 | 500-999 |
| 512-8278 | 53886-1 | Female | Blue | 1.40 | 1.26 | 1.05 |
| 512-8280 | 53885-1 | Surface-Mount | Blue | 4.10 | 3.42 | 2.93 |

## Series II Contacts

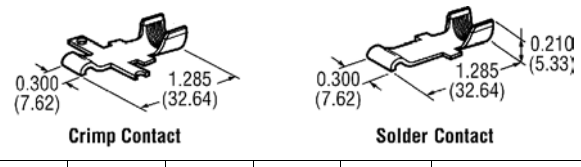


| Stock No. | Mfr.'s Type | Type | Wire AWG | Plating | EACH | |
|---|---|---|---|---|---|---|
| | | | | | 1-999 | 1000-4999 |
| 512-8282 | 53880-4 | Crimp | 10-6 | Silver | .82 | .73 |
| 512-8284 | 54330-1 | Solder | 6 Max. | Silver | .67 | .56 |