THIS DRAWING IS UNPUBLISHED. RELEASED FOR PUBLICATION -,- .
© COPYRIGHT - By - ALL RIGHTS RESERVED.

LOC	DIST
AJ	16

REVISIONS

P	LTR	DESCRIPTION	DATE	DWN	APVD
	F	ECR-12-017548	07JUN13	AM	MY

1. BERYLLIUM COPPER PER ASTM-B-197.
2. BRASS PER ASTM-B-16.
3. PTFE, PER ASTM-D-1710.
4. GOLD PLATE PER MIL-G-45204.
5. PACKAGED ON TAPE & REEL PER EIA-STD481 WITH SOLDER LEGS DOWN.

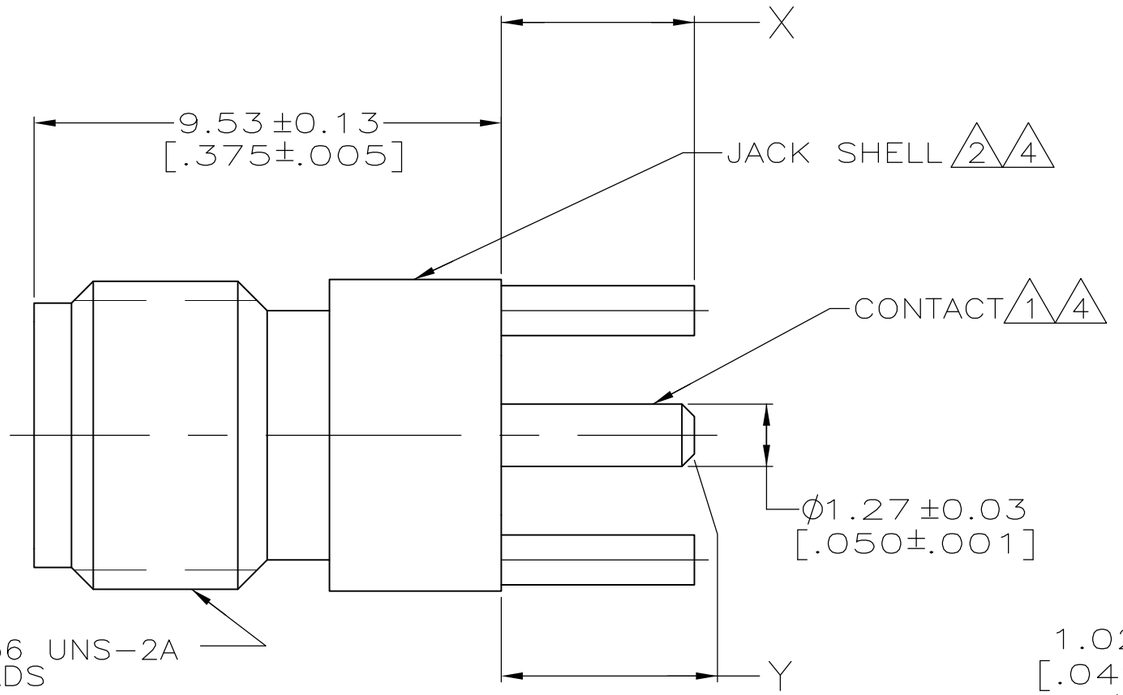

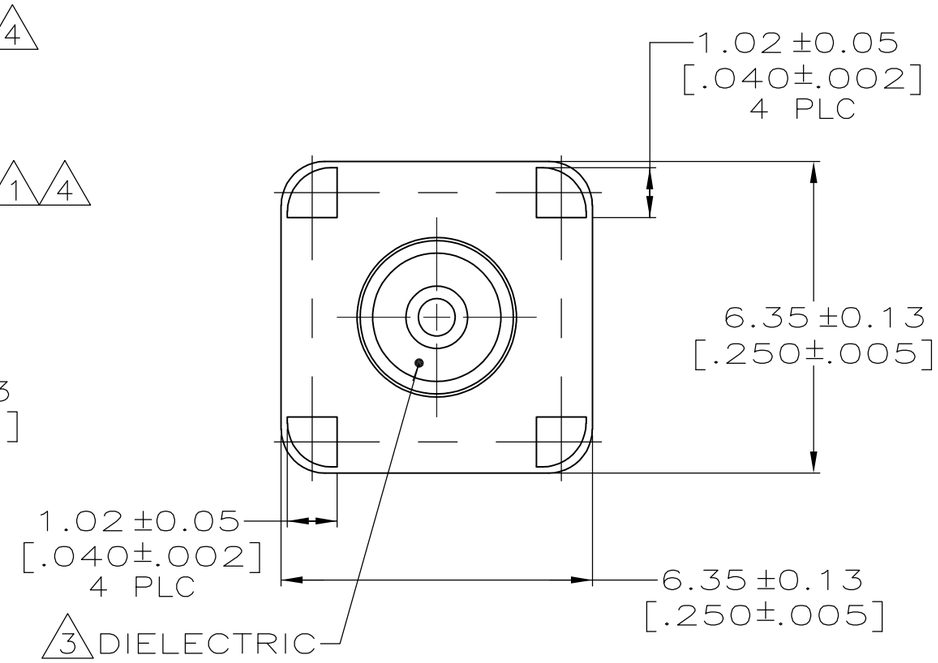

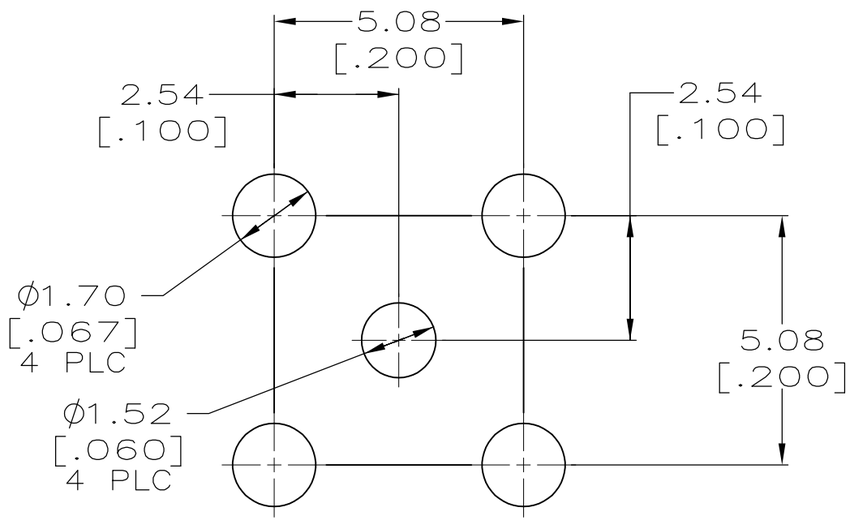

RECOMMENDED PCB CONFIGURATION

	Y	X	PART NUMBER
OBSOLETE 5	~~2.67 +0.25 −0.15 [.105 +.010 −.006]~~	~~2.67±0.13 [.105±.005]~~	~~221789-4~~
	2.67 +0.25 −0.15 [.105 +.010 −.006]	2.67±0.13 [.105±.005]	221789-3
	3.94 [.155]	3.94±0.25 [.155±.010]	221789-1

THIS DRAWING IS A CONTROLLED DOCUMENT.

DIMENSIONS: mm [INCHES]

TOLERANCES UNLESS OTHERWISE SPECIFIED:

0 PLC	± –
1 PLC	± –
2 PLC	± 0.08 [.003]
3 PLC	± –
4 PLC	± –
ANGLES	± –

MATERIAL 1 2 3

FINISH 4

DWN	B. MOYER	25NOV97
CHK	J. CABARLO	25NOV97
APVD	J. CABARLO	25NOV97
PRODUCT SPEC	—	
APPLICATION SPEC	—	
WEIGHT	—	

TE Connectivity

NAME: JACK, VERTICAL, PCB, SMA SERIES

SIZE	CAGE CODE	DRAWING NO	RESTRICTED TO
A3	00779	C-221789	—

CUSTOMER DRAWING | SCALE 8:1 | SHEET 1 OF 1 | REV F